# HIJSTECHNIEK
# TECHNIQUE DE LEVAGE
# LIFTING TECHNICS
# HEBETECHNIK

DECORLUX



DECORLUX

HIJSTECHNIEK
TECHNIQUE LEVAGE
HEBETECHNIK
LIFTING TECHNICS

| | |
|---|---|
| Lifting Chain Components - EU-Line<br>• Grade 80<br>• Inox Grade 60 | 1 |
| Lifting Chain Components - CN-Line<br>• Grade 80<br>• Grade 100 | 2 |
| Lifting Chain Components - EU-Line<br>• Grade 100 | 3 |
| Hijsogen | 4 |
| D-Sluitingen - US-Spanners | 5 |
| Takels -Lieren – Hefmagneten<br>Dommekracht Kabeltrekapparaten | 6 |
| PES Hijsbanden & Rondslingen | 7 |
| Sjorren EN 12195 | 8 |
| Terrier Hijsklemmen | 9 |
| Hijsbalken & Spreaders | 10 |
| ID- Tags – Roundlink chain -DIN<br>Hardware Wire Rope Fittings<br>Hardware Chain Fittings | 11 |
| Persoonlijke beschermingsmiddelen (PBM) | 12 |

# Lifting accessories Grade 80



HIJSTECHNIEK LIFTING TECHNICS

DECORLUX

TECHNIQUE DE LEVAGE HEBETECHNIK



# Lifting accessories Inox - Grade 60

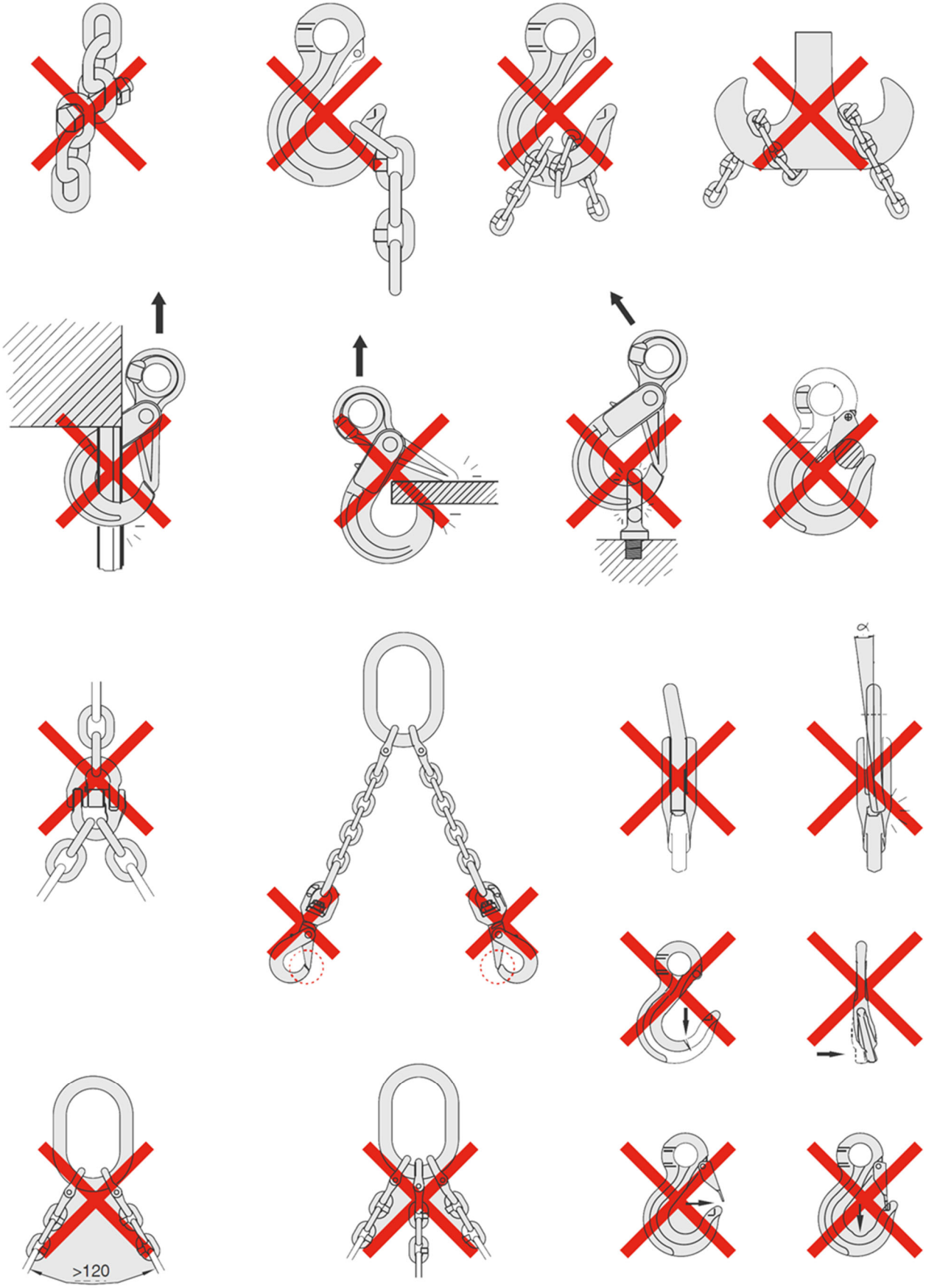
>120

| MAXIMUM WERKBELASTING<br>bij symmetrische belasting<br>WLL in [t]<br>Volgens DIN 5688-8 & EN 818-4<br>&<br>Gebruiksaanwijzing | CHARGE MAXIMUM D'UTILISATION<br>levage symétrique<br>CMU in [t]<br>Suivant DIN 5688-8 & EN 818-4<br>&<br>Mode d'emploi | WORKING LOAD LIMITS<br>to a balanced load<br>WLLin [t]<br>According DIN 5688-8 & EN 818-4<br>&<br>Safety instructions | TRAGFÄHIGKEIT<br>bei symm. Belastung<br>WLL in [t]<br>Nach DIN 5688-8 & EN 818-4<br>&<br>Gebrauchsanleitung |
|---|---|---|---|

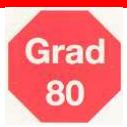





Spreidingshoek
Angle d'inclinaison
Inclination angle
Neigungswinkel

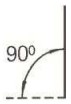


Kettingleng
1-brin
1-leg
1-strang

β
0°

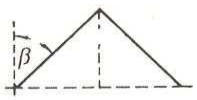


2-sprong
2-brins
2-legs
2-strang

β
0°- 45°

β
45°- 60°

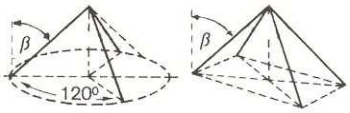


3- en 4 sprong
3-et 4 brins
3- and 4 legs
3- und 4strang

β
0°- 45°

β
45°- 60°

| Ketting - Chaîne<br>Chain - Kette | | Belastingsfaktoren - Facteurs de charge - Stress factors - Belastungsfaktoren (Bf) | | | | |
|---|---|---|---|---|---|---|
| mm | inch | 1 | 1.4 | 1 | 2.1 | 1.5 |
| 6 | 1/4 | 1.12 | 1.60 | 1.12 | 2.36 | 1.70 |
| 7 | 9/32 | 1.50 | 2.12 | 1.50 | 3.15 | 2.24 |
| 8 | 5/16 | 2.00 | 2.80 | 2.00 | 4.25 | 3.00 |
| 10 | 3/8 | 3.15 | 4.25 | 3.15 | 6.70 | 4.75 |
| 13 | 1/2 | 5.30 | 7.50 | 5.30 | 11.20 | 8.00 |
| 16 | 5/8 | 8.00 | 11.20 | 8.00 | 17.00 | 11.80 |
| 18 | 11/16 | 10.00 | 14.00 | 10.00 | 21.20 | 15.00 |
| 19 | 3/4 | 11.20 | 16.00 | 11.20 | 23.60 | 17.00 |
| 20 | 3/4 | 12.50 | 17.00 | 12.50 | 26.50 | 19.00 |
| 22 | 7/8 | 15.00 | 21.20 | 15.00 | 31.50 | 22.40 |
| 26 | 1 | 21.20 | 30.00 | 21.20 | 45.00 | 31.50 |
| 28 | - | 25.00 | 33.50 | 25.00 | 50.00 | 37.50 |
| 32 | 1 1/4 | 31.50 | 45.00 | 31.50 | 67.00 | 47.50 |
| 36 | 1 7/16 | 40.00 | 56.00 | 40.00 | 85.00 | 60.00 |
| 40 | 1 37/64 | 50.00 | 71.00 | 50.00 | 106.00 | 75.00 |
| 45 | 1 25/32 | 63.00 | 90.00 | 63.00 | 132.00 | 95.00 |

## Belastingsfactoren - Facteurs des charges - Load factors – Lastfaktoren (Bf)

| | | | | | | | | |
|---|---|---|---|---|---|---|---|---|
|  | 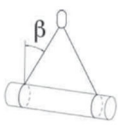 | | 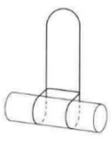 | 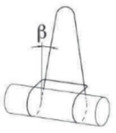 | 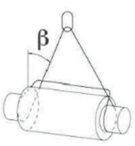 | | 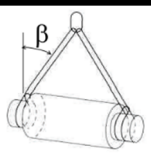 | |
| β=0° | 0°<β≤45° | 45°<β≤60° | β=0° | 0°<β≤25° | 0°<β≤45° | 45°<β≤60° | 0°<β≤45° | 45°<β≤60° |
| Bf: 0.8 | Bf: 1.12 | Bf: 0.8 | Bf: 1.6 | Bf: 1.45 | Bf: 1.13 | Bf: 0.8 | Bf: 1.7 | Bf: 1.2 |

## Reductiefactoren – Facteur des Reductions – Reduction factors – Reduktionsfaktoren (Rf)




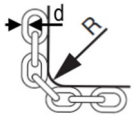


| R > 2x d | R > d | R < d | R < 0.8x d |
|---|---|---|---|
| Rf: 1 | Rf: 0.7 | Rf: 0.5 | |






| Light impact | Medium impact | Strong impact |
|---|---|---|
| Rf: 1 | Rf: 0.7 | |







| -40°C ⇔ 200°C | 200°C ⇔ 300°C | 300°C ⇔ 400°C | > 400°C - |
|---|---|---|---|
| Rf: 1 | Rf: 0.9 | Rf: 0.75 | |

**Ketting EN 818-2 Grade 80** | **Chaîne EN 818-2 Grade 80** | **Chain EN 818-2 Grade 80** | **Kette EN 818-2 Grade 80**

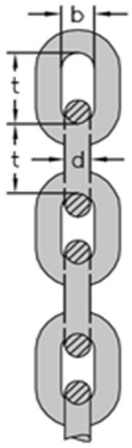


**Standaard**



**Speciale corrosiebescherming voor hijskettingen**
**Protection de corrosion pour chaîne de levage**
**Corrosionprotection for Lifting Chains**
**Korrosionsschutz für Rundstahlketten**



**CODE**

| BP | SP | HDG | ZTC-(Off-Shore) |
|---|---|---|---|
| **Zwart gelakt**<br>**Laquées noir**<br>**Black Painted**<br>**Schwarz lackiert** | **Speciaal verzinkt**<br>**Galvanisation spéciale**<br>**Special Galvanised**<br>**Special verzinkt**<br>*( !!! >16-8 = HDG)* | **Speciaal vuurverzinkt**<br>**Galva à chaud spéciale**<br>**Special Hot Dip Galvanised**<br>**Special Feuerverzinkt**<br>(Only in Standard L) | **Marine-Zinc tough coated**<br>specifically designed to be used in corrosive enviroments and extreme conditions<br>EN ISO 17668:2016 / SANS 53811, SABS permit no. 8009/12763<br>DNV type Approval<br>DNVGL-ST-E271 - 2.7-1 |

| Nominale maat Désignation Nominal size Nenngrösse | | WLL CMU | t | b | Kg | Art.NR Code Art. Stock No. Art.Nr. | Standard L | € | Art.NR Code Art. Stock No. Art.Nr. | Standard L | € | Art.NR Code Art. Stock No. Art.Nr. | Standard L | € | Art.NR Code Art. Stock No. Art. | Standard L | € |
|---|---|---|---|---|---|---|---|---|---|---|---|---|---|---|---|---|---|
| mm | inch | [t] | mm | mm | Kg/m | | m | | | m | | | m | | | | m | |
| 6-8 | 1/4 | **1.12** | 18 | 8.0 | 0.8 | **299711006** | 100 | | **299620006** | 100 | | | | | | | |
| 7-8 | 9/32 | **1.50** | 21 | 10.5 | 1.1 | **299711007** | 100 | | **299620007** | 100 | | | | | **299ZTC007** | 350 | |
| 8-8 | 5/16 | **2.00** | 24 | 10.8 | 1.5 | **299711008** | 100 | | **299620008** | 50 | | | | | **299ZTC008** | 350 | |
| 10-8 | 3/8 | **3.15** | 30 | 13.5 | 2.3 | **299711010** | 100 | | **299620010** | 50 | | **299HDG010** | 50 | | **299ZTC010** | 250 | |
| 13-8 | 1/2 | **5.30** | 39 | 17.5 | 3.8 | **299711013** | 100 | | **299620013** | 50 | | **299HDG013** | 50 | | **299ZTC013** | 150 | |
| 16-8 | 5/8 | **8.00** | 48 | 21.5 | 6.1 | **299711016** | 100 | | **299620016** | 50 | | **299HDG016** | 50 | | **299ZTC016** | 100 | |
| 18-8 | 11/16 | **10.0** | 54 | 24.3 | 7.3 | **299711018** | 75 | | *299620018* | 25 | | **299HDG018** | | | - | | |
| 19-8 | | **11.2** | 57 | 25.0 | 8.5 | **299711019** | 75 | | *299620019* | 20 | | | | | - | | |
| 20-8 | ¾ | **12.5** | 60 | 27.0 | 9.0 | **299711020** | 100 | | *299620020* | 20 | | **299HDG020** | 50 | | **299ZTC020** | 60 | |
| 22-8 | 7/8 | **15** | 66 | 29.5 | 10.9 | **299711022** | 100 | | *299620022* | 20 | | **299HDG022** | 50 | | **299ZTC022** | 50 | |
| 26-8 | 1 | **21.2** | 78 | 35.0 | 15.2 | **299711026** | 50 | | *299620026* | 13 | | **299HDG026** | 50 | | **299ZTC026** | 30 | |
| 28-8 | | **25.0** | 84 | 36.4 | 17.6 | **299711028** | 50 | | *299620028* | 11 | | | | | **-** | | |
| 32-8 | 11/4 | **31.5** | 96 | 41.6 | 23.0 | **299711032** | | | *299620032* | 8 | | **299HDG032** | 50 | | **299ZTC032** | 30 | |
| 36-8 | | **40.0** | 108 | 46.8 | 29.0 | **299711036** | | | *299620036* | | | **299HDG036** | 50 | | | | |
| 40-8 | | **50.0** | 120 | 52.0 | 36.0 | **299711040** | | | *299620040* | | | | | | | | |
| 45-8 | | **63.0** | 135 | 58.5 | 45.5 | **299711045** | | | *299620045* | | | | | | | | |

CE-identificatieplaatje G80 | Plaquettes de marquage – CE/G80 | Identification tag – CE/G80 | Anhänger – CE/G80

| 1-Ketting diameter<br>2-Aantal lengen<br>3-Spreidingshoek<br>4-WLL | 1-Diamétre chaîne<br>2-Nombre de brins<br>3-Angle d'inclinaison<br>4-CMU | 1-Chain thickness<br>2-Number of legs<br>3-Angle-inclination<br>4-WLL | 1-Kettennenndicke<br>2-Strangzahl<br>3-Neigungswinkel<br>4-WLL | Art.NR Code Art. Stock No. Art.Nr. | € | 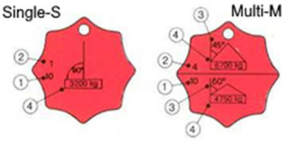 |
|---|---|---|---|---|---|---|
| ID-ALU TAG **S**<br>ID-ALU TAG **M** | ID-ALU TAG **S**<br>ID-ALU TAG **M** | ID-ALU TAG **S**<br>ID-ALU TAG **M** | ID-ALU TAG **S**<br>ID-ALU TAG **M** | 299910012<br>299910013 | | |
| Ø4x250mm<br>Kabel+klem | Ø4x250mm<br>Cable+ferrule | Ø4x250mm<br>Cable+ferrule | Ø4x250mm<br>Seil + Presklemme | 299911001 | |  |
| Set ID-ALU TAG **S**<br>Set ID-ALU TAG **M** | Set ID-ALU TAG **S**<br>Set ID-ALU TAG **M** | Set ID-ALU TAG **S**<br>Set ID-ALU TAG **M** | Set ID-ALU TAG **S**<br>Set ID-ALU TAG **M** | 220422<br>220423 | | Set /  |

UNI-identificatieplaatje | Plaquettes de marquage – UNI | Identification tag – UNI | Anhänger – UNI

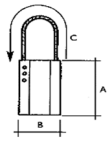

P-NORM

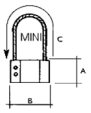

P-MINI




| code | A | B | C | | € |
|---|---|---|---|---|---|
| P-NORM | 60 | 45 | 200 | 220424 | |
| P-MINI | 25 | 45 | 150 | 220425 | |
| ∅70MM / 3MM ALU | | | | 220426 | |

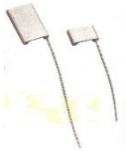

Topschalm
**Type MLS**
**1-2 sprongketting.EN 818-4**
Conform EN 1677-4

Anneau simples
**Type MLS**
**Élingues chaîne 1-2 brins EN 818-4**
Conform EN 1677-4

Master link
**Type MLS**
**1-2 leg chain slings EN 818-4**
Conform EN 1677-4

Aufhängeglied
**Type MLS**
**1-2strang Kettengehänge EN 818-4**
Conform EN 1677-4

| Nominale maat Désignation Nominal size Nenngrösse | WLL CMU [t] | 1-leng 1-brin 1-leg 1-strang | 2-leng 2-brin 2-leg 2-strang | d mm | l mm | w mm | Nr.Crane hook acc DIN15401 | Kg | Art.NR Code Art. Stock No. Art.Nr. | € |
|---|---|---|---|---|---|---|---|---|---|---|
| A13-8 | **1.60** | 6/7 | 6 | 13 | 110 | 60 | Nr.1.6↔Nr.2.5 | 0.3 | 207690013 | |
| A16-8 | **2.12** | 8 | 7 | 16 | 110 | 60 | Nr.1.6↔Nr.2.5 | 0.5 | 207690016 | |
| A18-8 | **3.15** | 10 | 8 | 18 | 135 | 75 | Nr.1.6↔ Nr 5 | 0.8 | 207690018 | |
| A22-8 | **5.30** | 13 | 10 | 22 | 160 | 90 | Nr.1.6↔ Nr 8 | 1.6 | 207690022 | |
| A26-8 | **8.00** | 16 | 13 | 26 | 180 | 100 | Nr.1.6↔ Nr 10 | 2.3 | 207690026 | |
| A32-8 | **12.50** | 18 | 16 | 32 | 200 | 110 | Nr.1.6↔ Nr 10 | 3.9 | 207690032 | |
| A36-8 | **17.00** | 20/22 | 18/19/20 | 36 | 260 | 140 | Nr.1.6↔ Nr 16 | 6.4 | 207690036 | |
| A40-8 | **18.00** | 20/22 | 19/20 | 40 | 300 | 160 | Nr.2.5↔ Nr 20 | 8.9 | 207690040 | |
| A45-8 | **21.20** | 26 | 22 | 45 | 340 | 180 | Nr.5↔ Nr 25 | 12.8 | 207690045 | |
| A50-8 | **31.50** | 32 | 26 | 51 | 350 | 190 | Nr.6↔ Nr 32 | 16.2 | 207690050 | |
| A56-8 | **56.00** | 36/40 | 32/36 | 56 | 400 | 200 | Nr.6↔ Nr 32 | 24.2 | 207690056 | |
| A63-8 | **56.00** | 40 | 36 | 63 | 430 | 220 | Nr.8↔ Nr 40 | 30.0 | 207690061 | |
| A71-8 | **71.00** | 45 | 40 | 71 | 460 | 250 | Nr.10↔ Nr 50 | 46.0 | 207690071 | |
| A80-8 | **90.00** | 50 | 45 | 80 | 500 | 270 | Nr.16↔ Nr 63 | 62.0 | 207690080 | |
| A90-8 | **112.00** | 56 | 50 | 90 | 500 | 270 | Nr.20↔ Nr 63 | 87.1 | 207690090 | |
| A100-8 | **140.00** | 63 | 56 | 100 | 550 | 300 | Nr.25↔ Nr 80 | 117.8 | 207690100 | |
| A115-8 | **180.00** | 71 | 63 | 115 | 670 | 350 | Nr25↔ Nr100 | 171.3 | 207690115 | |

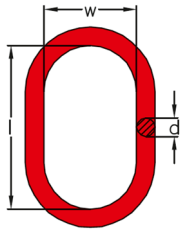


Topschalm DIN5688-3
**Type MLT**
**3-4 sprongketting EN 818-4**
Conform EN 1677-4

Anneau triples DIN5688-3 **élingues**
**Type MLT**
**chaîne 3-4 brins EN 818-4**
Conform EN 1677-4

Master link DIN5688-3
**Type MLT**
**3-4 leg chain slings EN 818-4**
Conform EN 1677-4

Aufhängeglied DIN5688-3
**Type MLT**
**3-4 strang Kettengehänge EN 818-4**
Conform EN 1677-4

| Nominale maat Désignation Nominal size Nenngrösse | WLL CMU [t] | d1 mm | l1 mm | w1 mm | d2 mm | l2 mm | w2 mm | t mm | Nr.Crane hook acc DIN15401 | Kg | Art.NR Code Art. Stock No. Art.Nr. | € |
|---|---|---|---|---|---|---|---|---|---|---|---|---|
| 6/7-8 | 3.15 | 18 | 135 | 75 | 13 | 54 | 25 | 189 | Nr.1.6↔Nr. 4 | 1.2 | 209518006 | |
| 8-8 | 4.25 | 22 | 160 | 90 | 16 | 70 | 34 | 230 | Nr.1.6↔Nr.6 | 2.3 | 209518008 | |
| 10-8 | 6.70 | 26 | 180 | 100 | 18 | 85 | 40 | 265 | Nr.1.6↔Nr.8 | 3.4 | 209518010 | |
| 13-8 | 11.20 | 32 | 200 | 110 | 22 | 115 | 50 | 315 | Nr.1.6↔Nr.8 | 6.1 | 209518013 | |
| 16-8 | 17.00 | 36 | 260 | 140 | 26 | 140 | 65 | 400 | Nr.1.6↔Nr16 | 9.9 | 209518016 | |
| 18-8 | 21.20 | 45 | 340 | 180 | 32 | 150 | 70 | 490 | Nr.5↔Nr 25 | 18.5 | 209518018 | |
| 19.20-8 | 26.50 | 51 | 350 | 190 | 32 | 150 | 70 | 500 | Nr.6↔Nr.25 | 22.6 | 209518019 | |
| 22-8 | 31.50 | 51 | 350 | 190 | 36 | 170 | 75 | 520 | Nr.6↔Nr.25 | 24.0 | 209518022 | |
| 26-8 | 54.00 | 60 | 400 | 200 | 40 | 170 | 80 | 570 | Nr.8↔Nr 32 | 38.1 | 209518026 | |
| 32-8 | 76.00 | 70 | 460 | 250 | 50 | 200 | 100 | 660 | Nr.10↔Nr.50 | 66.6 | 209518032 | |
| 36-8 | 85.00 | 80 | 500 | 270 | 63 | 250 | 125 | 750 | Nr.16↔ Nr.63 | 99.0 | 320336000 | |
| 40-8 | 106.00 | 90 | 560 | 300 | 63 | 250 | 125 | 810 | Nr.20↔ Nr.63 | 126 | 320340000 | |
| 45-8 | 132.00 | 100 | 610 | 330 | 70 | 280 | 140 | 890 | Nr.25↔Nr.80 | 173 | 320345000 | |

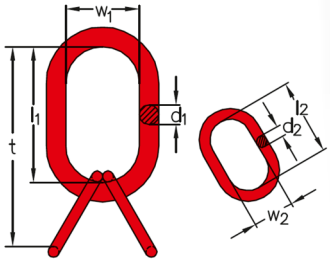


Verbindingsschalm
**Type VGX**

Maillon de jonction
**Type VGX**

Connecting Link
**Type VGX**

Verbindungsglied
**Type VGX**

| Nominale maat Désignation Nominal size Nenngrösse | WLL CMU [t] | O mm | R mm | C mm | P mm | S mm | A mm | Kg | Art.NR Code Art. Stock No. Art.Nr. | € |
|---|---|---|---|---|---|---|---|---|---|---|
| 6-8 | 1.12 | 16.5 | 43 | 18 | 7.2 | 6.8 | 16 | 0.07 | VGX8CL06 | |
| 7-8 | 1.50 | 20.5 | 50.5 | 20 | 10.2 | 9 | 17.8 | 0.10 | VGX8CL07 | |
| 8-8 | 2.00 | 23.5 | 62 | 25.5 | 11.5 | 10 | 19 | 0.25 | VGX8CL08 | |
| 10-8 | 3.15 | 27.5 | 72 | 30 | 12.6 | 12.6 | 23.8 | 0.35 | VGX8CL10 | |
| 13-8 | 5.30 | 33.3 | 87.3 | 36 | 19 | 16.7 | 28 | 0.68 | VGX8CL13 | |
| 16-8 | 8.00 | 39.5 | 103 | 40.5 | 20.6 | 20.8 | 34.3 | 1.10 | VGX8CL16 | |
| 18-8 | 10.00 | 44 | 116 | 48 | 23.7 | 21.7 | 43.7 | 1.75 | VGX8WK20 | |
| 20-8 | 12.50 | 47 | 116 | 48 | 23 | 23 | 44 | 1.70 | VGX8CL20 | |
| 22-8 | 15.00 | 55 | 133 | 51 | 26.5 | 26.5 | 49 | 2.20 | VGX8CL22 | |
| 26-8 | 21.20 | 66 | 148 | 60 | 31.5 | 31.5 | 60 | 4.20 | VGX8CL26 | |
| 32-8 | 31.50 | 86 | 190 | 77 | 40 | 32 | 80 | 7.19 | VGX8CL32 | |
| 36-8 | 40.00 | 97 | 235 | 84 | 46 | 42 | 85 | 15.6 | VGX350136 | |
| 40-8 | 50.00 | 97 | 235 | 84 | 46 | 42 | 85 | 15.6 | VGX350140 | |

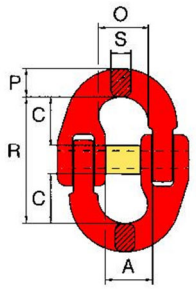

Topschalm met afvlakking
**Type MLS-A**
**1-2 sprongketting EN 818-4**
Conform EN1677-4

Anneau simples avec méplat
**Type MLS-A**
**élingues chaîne 1-2 brins EN 818-4**
Conform EN1677-4

Master link with a flat part
**Type MLS-A**
**1-2 leg chain slings EN 818-4**
Conform EN1677-4

Aufhängeglied mit Abflachung.
**Type MLS-A**
**1-2 strang Kettengehänge EN 818-4**
Conform EN1677-4

| Nominale maat Désignation Nominal size Nenngrösse | WLL CMU [t] | 1-leng 1-brin 1-leg 1-strang | 2-leng 2-brin 2-leg 2-strang | D mm | P mm | L mm | SxX mm | KG | Art.NR Code Art. Stock No. Art.Nr. | € |
|---|---|---|---|---|---|---|---|---|---|---|
| 13 | 1.60 | 6/7 | 6 | 13 | 110 | 60 | 8x25 | 0.3 | MLSA8CMS13 | |
| 16 | 2.12 | 8 | 7 | 16 | 110 | 60 | 8x25 | 0.5 | MLSA8CMS16 | |
| 18 | 3.15 | 10 | 8 | 18 | 135 | 75 | 8x35 | 0.8 | MLSA8CMS18 | |
| 22 | 5.30 | 13 | 10 | 22 | 160 | 90 | 12x35 | 1.5 | MLSA8CMS22 | |
| 26 | 8.00 | 16 | 13 | 26 | 180 | 100 | 14x46 | 2.3 | MLSA8CMS26 | |
| 32 | 12.50 | - | 16 | 32 | 2000 | 110 | 18x45 | 4.4 | MLSA8CMS32 | |

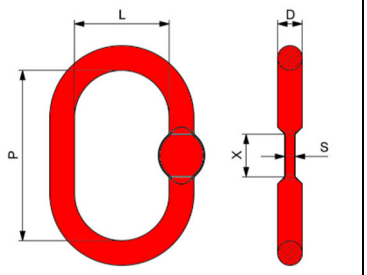


Topschalm met afvlakking
**Type MLT-A**
**3-4 sprongketting. EN 818-4**
Conform EN1677-4

Anneau simples avec méplat
**Type MLT-A**
**élingues chaîne 3-4 brins EN 818-4**
Conform EN1677-4

Master link with a flat part
**Type MLT-A**
**3-4 leg chain slings EN 818-4**
Conform EN1677-4

Aufhängeglied mit Abflach.
**Type MLT-A**
**3-4 strang Kettengehänge EN 818-4**
Conform EN1677-4

| Nominale maat Désignation Nominal size Nenngrösse | WLL CMU [t] | D mm | P mm | L mm | D1 mm | P1 mm | L1 mm | SxX mm | KG | Art.NR Code Art. Stock No. Art.Nr. | € |
|---|---|---|---|---|---|---|---|---|---|---|---|
| 6/7-8 | 3.15 | 18 | 135 | 75 | 13 | 54 | 25 | 8x25 | 1.3 | MLTA8CMCS18 | |
| 8-8 | 4.25 | 20 | 160 | 90 | 16 | 70 | 34 | 8x25 | 2.3 | MLTA8CMCS20 | |
| 10-8 | 6.70 | 26 | 180 | 100 | 18 | 85 | 40 | 12x35 | 3.5 | MLTA8CMCS26 | |
| 13-8 | 11.20 | 32 | 200 | 110 | 22 | 115 | 50 | 14x35 | 6.3 | MLTA8CMCS32 | |
| 16-8 | 17.00 | 40 | 260 | 140 | 26 | 140 | 65 | 18x46 | 9.6 | MLTA8CMCS40 | |

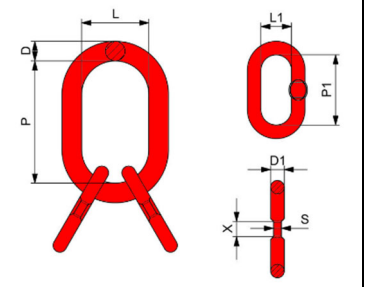


Omega-koppelingsbeugel
**Type OCC**

Coupleur-Omega
**Type OCC**

Omega - Chain coupler
**Type OCC**

Omega -Kettenverbinder
**Type OCC**

| Nominale maat Désignation Nominal size Nenngrösse | WLL CMU [t] | A mm | C mm | F mm | G mm | H mm | P mm | L mm | KG | Art.NR Code Art. Stock No. Art.Nr. | € |
|---|---|---|---|---|---|---|---|---|---|---|---|
| 7/8-8 | 2.00 | 8.7 | 24 | 32 | 11 | 18 | 9.5 | 33.5 | 0.18 | CC8CZ08 | |
| 10-8 | 3.15 | 12.5 | 32 | 44 | 14 | 19 | 13 | 43.5 | 0.35 | CC8CZ10 | |
| 13-8 | 5.30 | 15 | 40 | 55 | 17 | 25 | 17 | 57 | 0.72 | CC8CZ13 | |
| 16-8 | 8.00 | 19 | 50 | 65 | 22 | 30 | 21 | 69 | 1.2 | CC8CZ16 | |
| 20-8 | 12.50 | 23 | 57 | 75.6 | 32 | - | - | - | 2.10 | DXL8H1120 | |

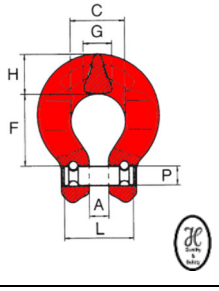

Topschalm met koppelingsbeugel voor 1-sprongketting EN 818-4 **Type MLW-CC** Conform EN1677-4

Anneau simples avec coupleur pour 1- brins EN 818-4 **Type MLS-WCC** Conform EN1677-4

Master link with Chain coupler for 1 leg chain slings EN 818-4 **Type MLS-WCC** Conform EN1677-4

Aufhängeglied mit. kettenverbinder für 1 strang Kettengehänge EN 818-4 **Type MLS-WCC** Conform EN1677-4

| Nominale maat Désignation Nominal size Nenngrösse | WLL CMU [t] | ØD mm | P mm | L mm | T mm | KG | Art.NR Code Art. Stock No. Art.Nr. | € |
|---|---|---|---|---|---|---|---|---|
| 6-8 | 1.12 | 13 | 110 | 60 | 140 | 0.58 | MLSWCC8CP106 | |
| 8-8 | 2.00 | 16 | 110 | 60 | 151 | 0.88 | MLSWCC8CP108 | |
| 10-8 | 3.15 | 18 | 135 | 75 | 185 | 1.35 | MLSWCC8CP110 | |
| 13-8 | 5.30 | 22 | 160 | 90 | 223 | 2.40 | MLSWCC8CP113 | |
| 16-8 | 8.00 | 26 | 180 | 100 | 257 | 4.00 | MLSWCC8CP116 | |

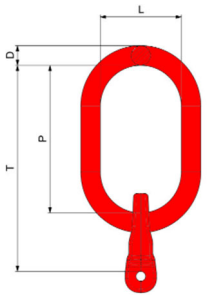


Topschalm met koppelingsbeugel voor 2-sprongketting EN 818-4 **Type MLW-CC** Conform EN1677-4

Anneau simples avec coupleur pour 2- brins EN 818-4 **Type MLS-WCC** Conform EN1677-4

Master link with Chain coupler for 2 leg chain slings EN 818-4 **Type MLS-WCC** Conform EN1677-4

Aufhängeglied mit. kettenverbinder für 2 strang Kettengehänge EN 818-4 **Type MLS-WCC** Conform EN1677-4

| Nominale maat Désignation Nominal size Nenngrösse | WLL CMU [t] | ØD mm | P mm | L mm | T mm | KG | Art.NR Code Art. Stock No. Art.Nr. | € |
|---|---|---|---|---|---|---|---|---|
| 6-8 | 1.60 | 13 | 110 | 60 | 140 | 0.70 | MLSWCC8CP206 | |
| 8-8 | 2.80 | 18 | 135 | 75 | 176 | 1.40 | MLSWCC8CP208 | |
| 10-8 | 4.25 | 20 | 160 | 90 | 210 | 2.45 | MLSWCC8CP210 | |
| 13-8 | 7.50 | 26 | 180 | 100 | 243 | 4.20 | MLSWCC8CP213 | |
| 16-8 | 11.2 | 32 | 200 | 110 | 277 | 7.05 | MLSWCC8CP216 | |

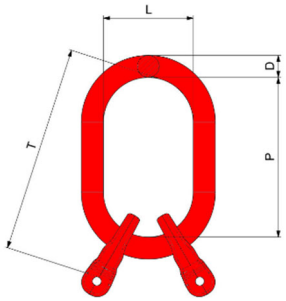


Topschalm met koppelingsbeugel voor 4-sprongketting EN 818-4 **Type MLW-CC** Conform EN1677-4

Anneau simples avec coupleur pour 4 brins EN 818-4 **Type MLS-WCC** Conform EN1677-4

Master link with Chain coupler for 4 leg chain slings EN 818-4 **Type MLS-WCC** Conform EN1677-4

Aufhängeglied mit. kettenverbinder für 4 strang Kettengehänge EN 818-4 **Type MLS-WCC** Conform EN1677-4

| Nominale maat Désignation Nominal size Nenngrösse | WLL CMU [t] | ØD mm | P mm | L mm | ØD1 mm | T mm | KG | Art.NR Code Art. Stock No. Art.Nr. | € |
|---|---|---|---|---|---|---|---|---|---|
| 6-8 | 2.36 | 18 | 135 | 75 | 13 | 219 | 1.65 | MLSWCC8CP406 | |
| 8-8 | 4.25 | 20 | 160 | 90 | 16 | 271 | 3.20 | MLSWCC8CP408 | |
| 10-8 | 6.70 | 26 | 180 | 100 | 18 | 315 | 5.30 | MLSWCC8CP410 | |
| 13-8 | 11.20 | 32 | 200 | 110 | 22 | 378 | 9.40 | MLSWCC8CP413 | |
| 16-8 | 17.00 | 40 | 260 | 140 | 26 | 477 | 16.30 | MLSWCC8CP416 | |

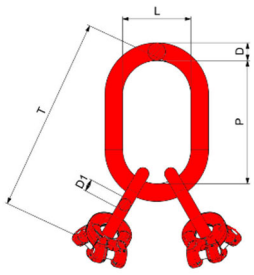

| Speciale Topschalm<br>voor kraanhaak DIN 15401 | Anneau simples spécial<br>pour crochets DIN 15401 | Special Master link<br>for Hooks DIN 15401 | Aufhängeglied<br>für Haken DIN 15401 |
|---|---|---|---|
| Kettingleng - 1 brin -1 Leg - Einstrang | | Multi-leng - Multi-brin - Multi-leg - Mehrstrang | |
| 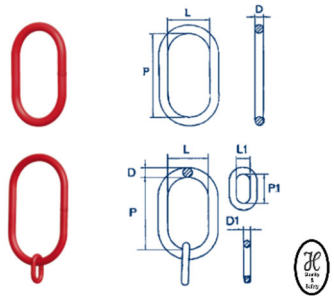 | | 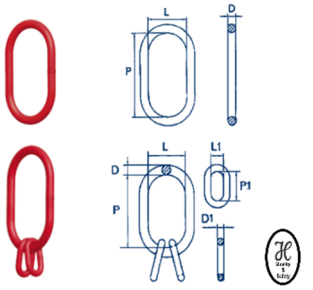 | |

**Topschalm 1XL – Type CO8** voor kraanhaak DIN 15401- NR 8 | **Anneau simples 1XL – Type CO8** pour crochets DIN 15401- NR 8 | **Master link 1XL - Type CO8** for Hooks DIN 15401- NR 8 | **Aufhängeglied 1XL - Type CO8** für Haken DIN 15401- NR 8

| Nominale maat<br>Désignation<br>Nominal size<br>Nenngrösse | 1-leng<br>1-brin<br>1-leg<br>1-strang | 2-leng<br>2-brin<br>2-leg<br>2-strang | 3-4-leng<br>3-4-brin<br>3-4-leg<br>3-4-strang | D<br>mm | D1<br>mm | P<br>mm | P1<br>mm | L<br>mm | L1<br>mm | Kg | Art.NR<br>Code Art.<br>Stock No.<br>Art.Nr. | € |
|---|---|---|---|---|---|---|---|---|---|---|---|---|
| NR8-13 | 6-8 | | | 13 | - | 180 | - | 100 | - | 0.60 | 1XL08T106 | |
| NR8-18 | 8-8 | | | 18 | - | 180 | - | 100 | - | 1.06 | 1XL08T108 | |
| NR8-18/13 | | 6-8 | | 18 | 13 | 180 | 54 | 100 | 25 | 1.43 | 1XL08T206 | |
| NR8-20 | 10-8 | | | 20 | - | 180 | - | 100 | - | 1.32 | 1XL08T110 | |
| NR8-20/13 | | | 6-8 | 20 | 13 | 180 | 54 | 100 | 25 | 1.70 | 1XL08T306 | |
| NR8-20/16 | | 8-8 | | 20 | 16 | 180 | 70 | 100 | 34 | 2.05 | 1XL08T208 | |
| NR8-22 | 13-8 | | | 22 | - | 180 | - | 100 | - | 1.62 | 1XL08T113 | |
| NR8-22 | | 10-8 | | 22 | | 180 | | 100 | | | 1XL08T210 | |
| NR8-22/16 | | | 8-8 | 22 | 16 | 180 | 70 | 100 | 34 | 2.35 | 1XL08T308 | |

**Topschalm 2XL – Type CO16** voor kraanhaak DIN 15401- NR 16 | **Anneau simples 2XL – Type CO16** pour crochets DIN 15401NR 16 | **Master link 2XL – Type CO16** for Hooks DIN 15401 NR 16 | **Aufhängeglied 2XL – Type CO16** für Haken DIN 15401 NR 16

| Nominale maat<br>Désignation<br>Nominal size<br>Nenngrösse | 1-leng<br>1-brin<br>1-leg<br>1-strang | 2-leng<br>2-brin<br>2-leg<br>2-strang | 3-4-leng<br>3-4-brin<br>3-4-leg<br>3-4-strang | D<br>mm | D1<br>mm | P<br>mm | P1<br>mm | L<br>mm | L1<br>mm | Kg | Art.NR<br>Code Art.<br>Stock No.<br>Art.Nr. | € |
|---|---|---|---|---|---|---|---|---|---|---|---|---|
| NR16-20/13 | 6-8 | | | 20 | 13 | 260 | 54 | 140 | 25 | 2.02 | 2XL16T106 | |
| NR16-20/13 | | 6-8 | | 20 | 13 | 260 | 54 | 140 | 25 | 2.20 | 2XL16T206 | |
| NR16-20/16 | 8-8 | | | 20 | 13 | 260 | 70 | 140 | 34 | 2.20 | 2XL16T108 | |
| NR16-20/16 | | 8-8 | | 20 | 13 | 260 | 70 | 140 | 34 | 2.56 | 2XL16T208 | |
| NR16-22/13 | | | 6-8 | 22 | 13 | 260 | - | 140 | 25 | 2.61 | 2XL16T306 | |
| NR16-22 | 10-8 | | | 22 | - | 260 | - | 140 | - | 2.21 | 2XL16T110 | |
| NR16-26/18 | | 10-8 | | 26 | 18 | 260 | 85 | 140 | 40 | 4.27 | 2XL16T210 | |
| NR16-26/18 | | | 8-8 | 26 | 18 | 260 | 85 | 140 | 40 | 4.27 | 2XL16T308 | |
| NR16-26 | 13-8 | | | 26 | - | 260 | - | 140 | - | 3.18 | 2XL16T113 | |
| NR16-30/20 | | 13-8 | | 30 | 18 | 260 | 85 | 140 | 40 | 5.68 | 2XL16T213 | |
| NR16-30/20 | | | 10-8 | 30 | 18 | 260 | 85 | 140 | 40 | 5.68 | 2XL16T310 | |
| NR16-30 | 16-8 | | | 30 | - | 260 | - | 140 | | 4.30 | 2XL16T116 | |
| NR16-35/22 | | 16-8 | | 35 | 22 | 260 | 115 | 140 | 50 | 8.10 | 2XL16T216 | |
| NR16-35/22 | | | 13-8 | 35 | 22 | 260 | 115 | 140 | 50 | 8.10 | 2XL16T313 | |
| NR16-35 | 18-8 | | | 35 | - | 260 | - | 140 | - | 5.97 | 2XL16T118 | |

**Topschalm 3XL – Type CO25** voor kraanhaak DIN 15401 NR 25 | **Anneau simples 3XL – Type CO25** Pour crochets DIN 15401 NR 25 | **Master link 3XL - Type CO25** For Hooks DIN 15401 NR 25 | **Aufhängeglied 3XL - Type CO25** für Haken DIN 15401 NR 25

| Nominale maat<br>Désignation<br>Nominal size<br>Nenngrösse | 1-leng<br>1-brin<br>1-leg<br>1-strang | 2-leng<br>2-brin<br>2-leg<br>2-strang | 3-4-leng<br>3-4-brin<br>3-4-leg<br>3-4-strang | D<br>mm | D1<br>mm | P<br>mm | P1<br>mm | L<br>mm | L1<br>mm | Kg | Art.NR<br>Code Art.<br>Stock No.<br>Art.Nr. | € |
|---|---|---|---|---|---|---|---|---|---|---|---|---|
| NR25-22/13 | 6-8 | | | 22 | 13 | 340 | 54 | 180 | 25 | 3.04 | 3XL25T106 | |
| NR25-22/13 | | 6-8 | | 22 | 13 | 340 | 54 | 180 | 25 | 3.22 | 3XL25T206 | |
| NR25-22/13 | | | 6-8 | 22 | 13 | 340 | 54 | 180 | 25 | 3.22 | 3XL25T306 | |
| NR25-22/16 | 8-8 | | | 22 | 16 | 340 | 70 | 180 | 34 | 3.21 | 3XL25T108 | |
| NR25-22/16 | | 8-8 | | 22 | 16 | 340 | 70 | 180 | 34 | 3.58 | 3XL25T208 | |
| NR25-26/18 | 10-8 | | | 26 | 18 | 340 | 85 | 180 | 40 | 4.58 | 3XL25T110 | |
| NR25-26/18 | | 10-8 | | 26 | 18 | 340 | 85 | 180 | 40 | 6.53 | 3XL25T210 | |
| NR25-26/20 | 13-8 | | | 26 | 20 | 340 | 85 | 180 | 40 | 4.72 | 3XL25T113 | |
| NR25-30/18 | | | 8-8 | 30 | 18 | 340 | 85 | 180 | 40 | 6.53 | 3XL25T308 | |
| NR25-30/18 | | | 10-8 | 30 | 18 | 340 | 85 | 180 | 40 | 6.53 | 3XL25T310 | |
| NR25-30/22 | 16-8 | | | 30 | 22 | 340 | 115 | 180 | 50 | 6.51 | 3XL25T116 | |
| NR25-35/20 | | 13-8 | | 35 | 20 | 340 | 85 | 180 | 40 | 8.90 | 3XL25T213 | |
| NR25-40/22 | | 16-8 | | 40 | 22 | 340 | 115 | 180 | 50 | 12.12 | 3XL25T216 | |
| NR25-40/22 | | | 13-8 | 40 | 22 | 340 | 115 | 180 | 50 | 12.12 | 3XL25T313 | |
| NR25-40/26 | 18-8 | | | 40 | 26 | 340 | 140 | 180 | 65 | 11.81 | 3XL25T118 | |
| NR25-40/26 | | 18-8 | | 40 | 26 | 340 | 140 | 180 | 65 | 13.63 | 3XL25T218 | |
| NR25-40/26 | | | 16-8 | 40 | 26 | 340 | 140 | 180 | 65 | 13.63 | 3XL25T316 | |

**Topschalm 4XL – Type CO40**
voor kraanhaak DIN 15401 NR 40

**Anneau simples 4XL – Type CO40**
Pour crochets DIN 15401 NR 40

**Master link 4XL - Type CO40**
For Hooks DIN 15401 NR 40

**Aufhängeglied 4XL - Type CO40**
für Haken DIN 15401 NR 40

| Nominale maat<br>Désignation<br>Nominal size<br>Nenngrösse | 1-leng<br>1-brin<br>1-leg<br>1-strang | 2-leng<br>2-brin<br>2-leg<br>2-strang | 3-4-leng<br>3-4-brin<br>3-4-leg<br>3-4-strang | D<br>mm | D1<br>mm | P<br>mm | P1<br>mm | L<br>mm | L1<br>mm | Kg | Art.NR<br>Code Art.<br>Stock No.<br>Art.Nr. | € |
|---|---|---|---|---|---|---|---|---|---|---|---|---|
| NR40-20/13 | 6-8 | | | 20 | 13 | 430 | 54 | 220 | 25 | 4.58 | 4XL40T106 | |
| NR40-24/13 | | 6-8 | | 24 | 13 | 430 | 54 | 220 | 25 | 4.70 | 4XL40T206 | |
| NR40-26/13 | | | 6-8 | 26 | 13 | 430 | 70 | 220 | 34 | 5.42 | 4XL40T306 | |
| NR40-24/16 | 8-8 | | | 24 | 16 | 430 | 70 | 220 | 34 | 4.60 | 4XL40T108 | |
| NR40-26/18 | | 8-8 | | 26 | 18 | 430 | 85 | 220 | 40 | 6.30 | 4XL40T208 | |
| NR40-30/18 | | | 8-8 | 30 | 18 | 430 | 85 | 220 | 40 | 8.04 | 4XL40T308 | |
| NR40-26/18 | 10-8 | | | 26 | 18 | 430 | 85 | 220 | 40 | 8.60 | 4XL40T110 | |
| NR40-30/18 | | 10-8 | | 30 | 18 | 430 | 85 | 220 | 40 | 8.10 | 4XL40T210 | |
| NR40-34/22 | | | 10-8 | 34 | 22 | 430 | 115 | 220 | 115 | 11.15 | 4XL40T310 | |
| NR40-30/20 | 13-8 | | | 30 | 20 | 430 | 85 | 220 | 40 | 7.56 | 4XL40T113 | |
| NR40-34/20 | | 13-8 | | 34 | 20 | 430 | 85 | 220 | 40 | 10.16 | 4XL40T213 | |
| NR40-40/26 | | | 13-8 | 40 | 26 | 430 | 140 | 220 | 65 | 15.77 | 4XL40T313 | |
| NR40-34/22 | 16-8 | | | 34 | 22 | 430 | 115 | 220 | 50 | 9.90 | 4XL40T116 | |
| NR40-40/26 | | 16-8 | | 40 | 26 | 430 | 140 | 220 | 65 | 15.73 | 4XL40T216 | |
| NR40-42/26 | | | 16-8 | 42 | 26 | 430 | 140 | 220 | 65 | 17.60 | 4XL40T316 | |
| NR40-40/26 | 18-8 | | | 40 | 26 | 430 | 140 | 220 | 65 | 13.93 | 4XL40T118 | |
| NR40-42/26 | | 18-8 | | 42 | 26 | 430 | 140 | 220 | 65 | 17.60 | 4XL40T218 | |
| NR40-48/32 | | | 18-8 | 48 | 32 | 430 | 150 | 220 | 70 | 23.75 | 4XL40T318 | |
| NR40-42/26 | 20-8 | | | 42 | 26 | 430 | 140 | 220 | 65 | 15.62 | 4XL40T120 | |
| NR40-45/26 | | 20-8 | | 45 | 26 | 430 | 140 | 220 | 65 | 19.82 | 4XL40T220 | |
| NR40-54/36 | | | 20/22-8 | 54 | 36 | 430 | 170 | 220 | 75 | 31.60 | 4XL40T322 | |
| NR40-45 | 22-8 | | | 45 | | 430 | | 220 | | 16 | 4XL40T122 | |
| NR40-48/32 | | 22-8 | | 48 | 32 | 430 | 150 | 220 | 70 | 23.85 | 4XL40T222 | |
| NR40-48 | 26/28-8 | | | 48 | | 430 | | 220 | | 18.00 | 4XL40T128 | |
| NR40-54/40 | | 26/28-8 | | 54 | 40 | 430 | 170 | 220 | 80 | 33.60 | 4XL40T228 | |
| NR40-60/40 | | | 26-8 | 60 | 40 | 430 | 170 | 220 | 80 | 39.90 | 4XL40T326 | |
| NR40-54 | 32-8 | | | 54 | | 430 | | 220 | | 23.00 | 4XL40T132 | |
| NR40-62 | | 32-8 | | 62 | | 430 | | 220 | | 28.90 | 4XL40T232 | |

Topschalm met handgrepen
met anti corrosie bescherming
**Type HA-H8-OS+**
Conform EN1677-4 / DNV2.7-1
ASME B30.26 / AS3776-2015

Anneau simples avec poignées
avec protection anti-corrosion
**Type HA-H8-OS+**
Conform EN1677-4 / DNV2.7-1
ASME B30.26 / AS3776-2015

Master link with Handles
with corrosion protection
**Type HA-H8-OS+**
Conform EN1677-4 / DNV2.7-1
ASME B30.26 / AS3776-2015

Aufhängeglied mit mit Handgriffen
mit Korrosionsschutz
**Type HA-H8-OS+**
Conform EN1677-4 / DNV2.7-1
ASME B30.26 / AS3776-2015

| Nominale maat<br>Désignation<br>Nominal size<br>Nenngrösse | WLL<br>CMU<br>B≤45° to vertical<br>[t] | ØA<br>mm | B<br>mm | C<br>mm | D<br>mm | E<br>mm | F<br>mm | KG | Art.NR<br>Code Art.<br>Stock No.<br>Art.Nr. | € |
|---|---|---|---|---|---|---|---|---|---|---|
| HA22-H8-OS+ | 7.00 | 22 | 270 | 140 | 16 | 100 | 55 | 3.00 | OS330H8220 | |
| HA25-H8-OS+ | 9.30 | 25.5 | 270 | 140 | 16 | 100 | 55 | 3.84 | OS330H8250 | |
| HA28-H8-OS+ | 14.50 | 28 | 270 | 140 | 16 | 100 | 55 | 4.51 | OS330H8280 | |
| HA32-H8-OS+ | 19.00 | 32 | 270 | 140 | 16 | 100 | 55 | 5.75 | OS330H8320 | |
| HA36-H8-OS+ | 26.00 | 36 | 270 | 140 | 16 | 100 | 55 | 7.19 | OS330H8360 | |

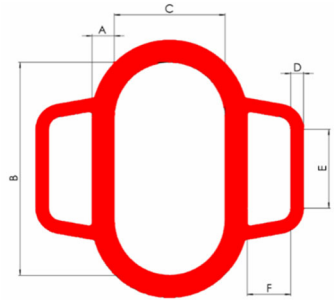


*Operational temperature range : -40° C - +200°C.
*Hardness range: 34 - 36 HRC
*Average impact energy (charpy): 42 Joules min. impact resisitance at -40°C up to 50mm diameter
*SF : 5:1

Tussenschalm/verbindingschalm B
**Type BLS**
Conform EN 1677-4 & EN818-4

Maillon Intermédiaire/maillon jonction B
**Type BLS**
Conform EN 1677-44 & EN818-4

Intermediate link/joining link B
**Type BLS**
Conform EN 1677-44 & EN818-4

Zwischenglied/ Übergangsglied B
**Type BLS**
Conform EN 1677-44 & EN818-4

| Nominale maat<br>Désignation<br>Nominal size<br>Nenngrösse | WLL<br>CMU<br>[t] | Ød<br>mm | w<br>mm | t<br>mm | EN 818-4 configuration of BLS in 1L, 2L, 3-4L with Chain EN818-2<br>**BLS-(I)**<br>Tussenschalm<br>Maillon intermédiaire<br>Intermediate link<br>Zwichenglied | **BLS-(J)**<br>Verbindingsschalm<br>Maillon de junction<br>Joining link<br>Übergangsgied | KG | Art.NR<br>Code Art.<br>Stock No.<br>Art.Nr. | € |
|---|---|---|---|---|---|---|---|---|---|
| B7-8 | **1.12** | 7 | 16 | 35 | - | Ø6x18 | 0.03 | BLS8B07 | |
| B8-8 | **1.5** | 8 | 20 | 44 | - | Ø7x21 | 0,05 | BLS8B08 | |
| B10-8 | **2.0** | 10 | 20 | 44 | - | Ø 8x24 | 0,08 | BLS8B10 | |
| B13-8 | **3.15** | 13 | 25 | 54 | Ø6x18 Ø7x21 | Ø10x30 | 0,18 | BLS8B13 | |
| B16-8 | **5.3** | 16 | 34 | 70 | Ø8x24 | Ø13x39 | 0,35 | BLS8B16 | |
| B18-8 | **6.7** | 18 | 40 | 85 | Ø10x30 | - | 0,6 | BLS8B18 | |
| B20-8 | **8.0** | 20 | 40 | 85 | - | Ø16x48 | 0,7 | BLS8B20 | |
| B22-8 | **12.5** | 22 | 50 | 115 | Ø13x39 | Ø18x54 Ø20x60 | 1,08 | BLS8B22 | |
| B26-8 | **16.0** | 26 | 65 | 140 | Ø16x48 | Ø22x66 | 1,87 | BLS8B26 | |
| B32-8 | **21.2** | 32 | 70 | 150 | Ø18x54 Ø20x60 | Ø26x78 | 2,93 | BLS8B32 | |
| B36-8 | **25.0** | 36 | 75 | 170 | Ø22x66 | Ø28x84 | 4,13 | BLS8B36 | |
| B40-8 | **31.5** | 40 | 80 | 170 | Ø26x78 | Ø32x96 | 5,5 | BLS8B40 | |
| B45-8 | **40.0** | 45 | 90 | 180 | Ø28x84 | Ø36x108 | 7,5 | BLS8B45 | |
| B50-8 | **50.0** | 50 | 100 | 200 | Ø32x96 | Ø40x120 | 10,8 | BLS8B50 | |
| B56-8 | **63.0** | 56 | 115 | 230 | | Ø45x135 | 15,4 | BLS8B56 | |
| B63-8 | **80.0** | 63 | 125 | 250 | Ø36x108 Ø40x120 | Ø50x150 | 20,6 | BLS8B63 | |
| B70-8 | **100** | 70 | 140 | 280 | Ø45x135 | - | 28,3 | BLS8B70 | |
| B80-8 | **120** | 80 | 180 | 360 | Ø50x150 | - | 46,5 | BLS8B80 | |
| B90-8 | **160** | 90 | 200 | 400 | - | - | 65.5 | BLS8B90 | |

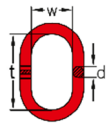


**1L ASSY EN818-4**

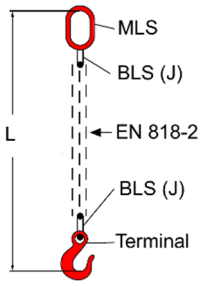


**2L ASSY EN818-4**

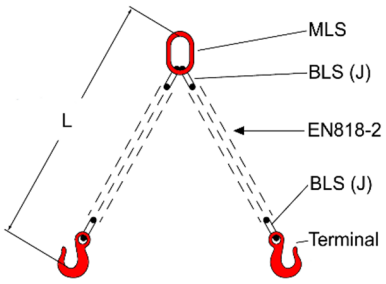


**3-4L ASSY EN818-4**

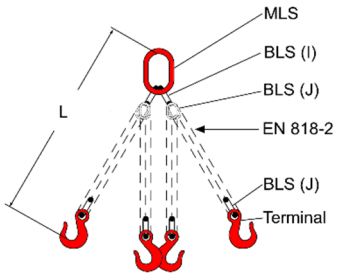


Eindschalm met afvlakking
**Type EG**.
Conform EN 1677-4

Mailles d'extrémité avec méplat.
**Type EG**
Conform EN 1677-4

Sub & End link with a flat part **Type EG**
Conform EN 1677-4

Endglied mit Abflachung
**Type EG**
Conform EN 1677-4

| Nominale maat<br>Désignation<br>Nominal size<br>Nenngrösse | WLL<br>CMU<br>KG | d<br>mm | l<br>mm | w<br>mm | KG | Art.NR<br>Code Art.<br>Stock No.<br>Art.Nr. | € |
|---|---|---|---|---|---|---|---|
| 6-8 | 1120 | 13 | 60 | 30 | 0.2 | 209512006 | |
| 7-8 | 1500 | 16 | 70 | 35 | 0.4 | 209512007 | |
| 8-8 | 2000 | 16 | 70 | 35 | 0.4 | 209512008 | |
| 10-8 | 3150 | 20 | 90 | 45 | 0.7 | 209512010 | |
| 13-8 | 5300 | 26 | 120 | 60 | 1.6 | 209512013 | |
| 16-8 | 8000 | 28 | 130 | 65 | 1.9 | 209512016 | |
| 18/20-8 | 12500 | 32 | 140 | 70 | 2.9 | 209512018 | |

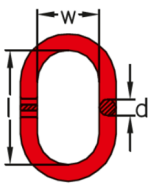

## Joker Textielhaak / Joker Crochet de textile / Joker Textile hook / Joker Textil haak
**Type CJX**

| Kleur couleur color Farbe Code | Nominale maat Désignation Nominal size Nenngrösse SWL-CMU | A mm | B mm | C mm | D mm | G mm | H mm | P mm | T mm | Kg | Art.NR Code Art. Stock No. Art.Nr. | € |
|---|---|---|---|---|---|---|---|---|---|---|---|---|
| | 1 ton | 78 | 123 | 12 | 41 | 17 | 20 | 16 | 31 | 0.7 | CJX8CX01 | |
| | 2 ton | 91 | 148 | 19 | 55 | 21 | 26 | 17 | 40 | 1.2 | CJX8CX02 | |
| | 3 ton | 113 | 175 | 21 | 55 | 25 | 32 | 25 | 50 | 2.2 | CJX8CX03 | |
| | 4 ton | 133 | 223 | 40 | 70 | 36 | 40 | 36 | 60 | 4.5 | CJX8CX04 | |
| | 5 ton | 133 | 223 | 40 | 70 | 36 | 40 | 36 | 60 | 4.5 | CJX8CX05 | |
| | 6 ton | 133 | 223 | 40 | 70 | 36 | 40 | 36 | 60 | 4.5 | CJX8CX06 | |
| | 8 ton | 188 | 302 | 50 | 105 | 40 | 60 | 42 | 80 | 65 | CJX8CX08 | |
| | 10 ton | 188 | 302 | 50 | 105 | 40 | 60 | 42 | 80 | 65 | CJX8CX10 | |

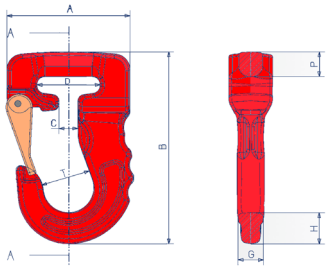


## Verbindingsschalm voor hijsbanden / Maillon de jonction pour sangles / Webbing Coupling link / Verbindungsglied – Schlinge
**Type VTX**

| Nominale maat Désignation Nominal size Nenngrösse | WLL CMU [t] | A mm | B mm | C mm | D mm | E mm | F mm | G mm | H mm | I mm | Kg | Art.NR Code Art. Stock No. Art.Nr. | € |
|---|---|---|---|---|---|---|---|---|---|---|---|---|---|
| 6-8 | 1.00 | 40 | 56 | | 17 | 18 | | 15 | 7 | | 0.20 | VTS8WK06 | |
| 7/8-8 | 2.00 | 40 | 58 | 24 | 20 | 24 | 14 | 17 | 9 | 10 | 0.28 | VTX8CLS07 | |
| 10-8 | 3.15 | 40 | 81 | 35 | 30 | 30 | 14 | 23 | 11 | 13 | 0.47 | VTX8CLS10 | |
| 13-8 | 5.30 | 55 | 104 | 48 | 36 | 36 | 18 | 28 | 16 | 16 | 0.99 | VTX8CLS13 | |
| 16-8 | 8.00 | 67 | 115 | 57 | 40 | 44 | 24 | 36 | 21 | 21 | 2.0 | VTX8CLS16 | |
| 20-8 | 12.50 | 82 | 134 | 65 | 50 | 52 | 29 | 40 | 23 | 23 | 2.3 | VTX8CLS20 | |
| 22-8 | 15.00 | 125 | 177 | 100 | 59 | 68 | 39 | 43 | 27 | 27 | 6.3 | VTX8CLS22 | |
| 26-8 | 21.20 | 152 | 210 | - | 65 | 228 | - | 21 | 30 | - | 10.6 | VTS8WK26 | |
| 32-8 | 31.50 | 160 | 279 | - | 85 | 252 | - | 31 | 55 | - | 19 | VTS8WK32 | |

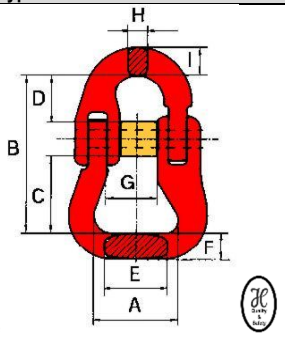


## Veiligheidshaak met gaffel / Crochet de securité à chape / Self Locking clevis hook / Sicherheitslasthaak
**Type LSG**

| Nominale maat Désignation Nominal size Nenngrösse | WLL CMU [t] | A mm | B mm | C mm | G mm | H mm | R mm | T mm | Kg | Art.NR Code Art. Stock No. Art.Nr. | € |
|---|---|---|---|---|---|---|---|---|---|---|---|
| 6-8 | 1.10 | 28 | 7 | 8 | 16 | 21 | 94 | 35 | 0.50 | LSG8CRF06 | |
| 7/8-8 | 2.00 | 34 | 9 | 10 | 20 | 26 | 123 | 43 | 0.95 | LSG8CRF08 | |
| 10-8 | 3.10 | 45 | 12 | 14 | 25 | 30 | 143 | 56 | 1.60 | LSG8CRF10 | |
| 13-8 | 5.30 | 51 | 15 | 17 | 35 | 40 | 180 | 69 | 3.20 | LSG8CRF13 | |
| 16-8 | 8.00 | 60 | 19 | 19 | 36 | 50 | 215 | 80 | 5.95 | LSG8CRF16 | |
| 20-8 | 12.50 | 70 | 23 | 26 | 60 | 67 | 253 | 90 | 9.80 | LSG8CRF20 | |
| 22 -8 | 15.00 | 80 | 26 | 32 | 62 | 70 | 287 | 100 | 14.4 | LSG8CRF22 | |

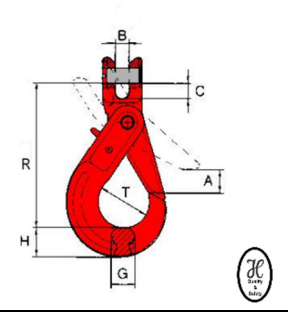


## Veiligheidshaak met oog / Crochet de securité à œil / Self Locking eyehook / Sicherheitslasthaak mit Öse
**Type LSO**

| Nominale maat Désignation Nominal size Nenngrösse | WLL CMU [t] | A mm | D mm | G mm | H mm | O mm | R mm | T mm | Kg | Art.NR Code Art. Stock No. Art.Nr. | € |
|---|---|---|---|---|---|---|---|---|---|---|---|
| 6-8 | 1.12 | 28 | 11 | 16 | 21 | 21 | 109 | 35 | 0.51 | LSO8CRO06 | |
| 7/8-8 | 2.00 | 34 | 12 | 20 | 26 | 25 | 135 | 43 | 0.94 | LSO8CRO08 | |
| 10-8 | 3.15 | 45 | 16 | 25 | 30 | 33 | 168 | 56 | 1.63 | LSO8CRO10 | |
| 13-8 | 5.30 | 51 | 20 | 35 | 40 | 40 | 205 | 69 | 3.25 | LSO8CRO13 | |
| 16-8 | 8.00 | 60 | 27 | 36 | 50 | 50 | 251 | 80 | 6.05 | LSO8CRO16 | |
| 20-8 | 12.50 | 70 | 30 | 60 | 67 | 60 | 290 | 90 | 10.5 | LSO8CRO20 | |
| 22-8 | 15.00 | 80 | 32 | 62 | 70 | 70 | 322 | 100 | 14.4 | LSO8CRO22 | |
| 26-8 | 21.20 | 106 | 38 | 80 | 72 | 80 | 362 | 96 | 20.0 | LSO8WKS26 | |
| 32-8 | 31.50 | 140 | 50 | 100 | 94 | 105 | 470 | 133 | 44.00 | LSO8WKS32 | On demand |

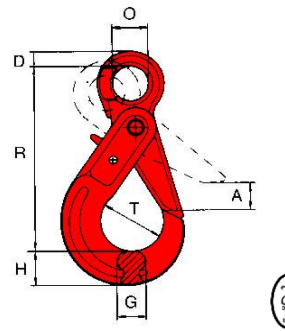

Veiligheidshaak met wartel
**Type LSW**

Crochet de securité à emerilllon
**Type LSW**

Swivel Self Locking hook
**Type LSW**

Sicherheitslasthaak mit Öse-drehbar
**Type LSW**

| Nominale maat Désignation Nominal size Nenngrösse | WLL CMU [t] | R mm | A mm | B mm | O mm | D mm | G mm | H mm | Kg | Art.NR Code Art. Stock No. Art.Nr. | € |
|---|---|---|---|---|---|---|---|---|---|---|---|
| 6 - 8 | 1.12 | 150 | 28 | 23 | 33 | 11 | 15 | 20 | 0.6 | LSW8CRG06 | |
| 7/8 - 8 | 2.00 | 185 | 34 | 27 | 37 | 13 | 19 | 24 | 1.1 | LSW8CRG08 | |
| 10 - 8 | 3.15 | 217 | 45 | 35 | 42 | 16 | 23 | 30 | 2.0 | LSW8CRG10 | |
| 13 - 8 | 5.30 | 271 | 54 | 43 | 48 | 21 | 27 | 40 | 4.0 | LSW8CRG13 | |
| 16 - 8 | 8.00 | 334 | 62 | 58 | 62 | 22 | 37 | 49 | 6.8 | LSW8CRG16 | |

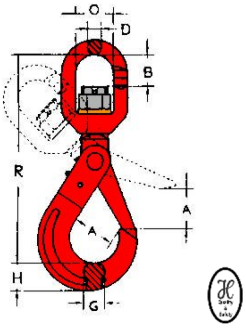


Gaffelhaak met veiligheidsklep"
**Type SGX-SL**
met veiligheidsklep"L"
**Type SGX-SF**
met gesmede veiligheidsklep"F"

Crochet à chape avec linguet
**Type SGX-SL**
avec linguet"L"
**Type SGX-SF**
avec linguet forgé"F"

Clevis hook with safety Latch
**Type SGX-SL**
with safety Latch"L"
**Type SGX-SF**
with Forged safety Latch"F"

Gabelhaak mit Sicherungsfalle
**Type SGX-SL**
mit Sicherungsfalle"L"
**Type SGX-SF**
Mit Geschmiede Sicherungsfalle "F"

| | Nominale maat Désignation Nominal size Nenngrösse | WLL CMU [t] | A mm | A1 mm | B mm | C mm | G mm | H mm | P mm | R mm | Kg | Art.NR Code Art. Stock No. Art.Nr. | € |
|---|---|---|---|---|---|---|---|---|---|---|---|---|---|
| SGX-SL | 6-8 | 1.12 | 25 | 19 | 7 | 8 | 14 | 20 | 7 | 73 | 0.24 | SGX8CB06SL | |
| | 7/8-8 | 2.00 | 29 | 25 | 9 | 10 | 19 | 27 | 9 | 87 | 0.53 | SGX8CB08SL | |
| | 10-8 | 3.15 | 35 | 29 | 12 | 13 | 23 | 33 | 13 | 105 | 0.95 | SGX8CB10SL | |
| | 13-8 | 5.30 | 43 | 35 | 15 | 17 | 28 | 40 | 16 | 128 | 1.67 | SGX8CB13SL | |
| SGX-SF | 6-8 | 1.12 | 25 | 19 | 7 | 8 | 14 | 20 | 7 | 73 | 0.24 | SGX8CB06SF | |
| | 7/8-8 | 2.00 | 29 | 25 | 9 | 10 | 19 | 27 | 9 | 87 | 0.53 | SGX8CB08SF | |
| | 10-8 | 3.15 | 35 | 29 | 12 | 13 | 23 | 33 | 13 | 105 | 0.95 | SGX8CB10SF | |
| | 13-8 | 5.30 | 43 | 35 | 15 | 17 | 28 | 40 | 16 | 128 | 1.67 | SGX8CB13SF | |
| | 16-8 | 8.00 | 56 | 45 | 18 | 22 | 37 | 48 | 20 | 155 | 3.00 | SGX8CB16SF | |
| | 20-8 | 12.50 | 61 | 53 | 23 | 26 | 46 | 52 | 24 | 183 | 5.70 | SGX8CB20SF | |
| | 22-8 | 15.00 | 72 | 62 | 24 | 29 | 50 | 62 | 27 | 213 | 8.80 | SGX8CB22SF | |
| | 26-8 | 21.20 | 77 | 73 | 30 | 34 | 60 | 75 | 30 | 230 | 13.5 | SGX8CB26SF | |

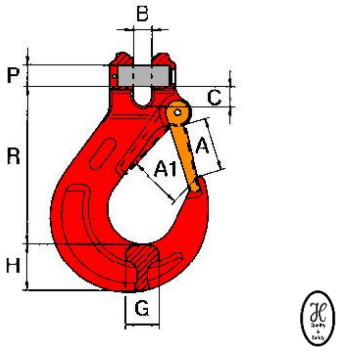


Ooglhaak met veiligheidsklep"
**Type SOX-SL**
met veiligheidsklep"L"
**Type SOX-SF**
met gesmede veiligheidsklep"F"

Crochet à oeil avec linguet
**Type SOX-SL**
avec linguet"L"
**Type SOX-SF**
avec linguet forgé"F"

Eye hook with safety Latch
**Type SOX-SL**
with safety Latch"L"
**Type SOX-SF**
with Forged safety Latch"F"

Osehaak mit Sicherungsfalle
**Type SOX-SL**
mit Sicherungsfalle"L"
**Type SOX-SF**
Mit Geschmiede Sicherungsfalle "F"

| | Nominale maat Désignation Nominal size Nenngrösse | WLL CMU [t] | A mm | A2 mm | D mm | G mm | H mm | O mm | R mm | Kg | Art.NR Code Art. Stock No. Art.Nr. | € |
|---|---|---|---|---|---|---|---|---|---|---|---|---|
| SOX-SL | 6-8 | 1.12 | 25 | 25 | 9 | 14.5 | 20 | 20.5 | 80.5 | 0.3 | SOX8CA06SL | |
| | 7/8-8 | 2.00 | 29 | 26 | 11 | 19 | 27 | 25 | 95.5 | 0.5 | SOX8CA08SL | |
| | 10-8 | 3.15 | 36 | 31 | 14 | 23.5 | 33 | 34 | 120.5 | 0.9 | SOX8CA10SL | |
| | 13-8 | 5.30 | 44 | 41 | 18 | 29 | 40 | 42.5 | 150 | 1.5 | SOX8CA13SL | |
| SOX-SF | 6-8 | 1.12 | 25 | 25 | 9 | 14.5 | 20 | 20.5 | 80.5 | 0.3 | SOX8CA06SF | |
| | 7/8-8 | 2.00 | 29 | 26 | 11 | 19 | 27 | 25 | 95.5 | 0.5 | SOX8CA08SF | |
| | 10-8 | 3.15 | 36 | 31 | 14 | 23.5 | 33 | 34 | 120.5 | 0.9 | SOX8CA10SF | |
| | 13-8 | 5.30 | 44 | 41 | 18 | 29 | 40 | 42.5 | 150 | 1.5 | SOX8CA13SF | |
| | 16-8 | 8.00 | 53 | 50 | 22 | 35.5 | 49 | 52 | 183 | 2.8 | SOX8CA16SF | |
| | 20-8 | 12.50 | 63 | 60 | 27 | 42 | 53 | 55 | 203 | 4.5 | SOX8CA20SF | |
| | 22-8 | 15.00 | 70 | 75 | 30 | 51.5 | 60 | 60 | 224 | 7.1 | SOX8CA22SF | |
| | 26-8 | 21.20 | 77 | 73 | 35 | 60 | 75 | 70 | 257 | 13.8 | SOX8CA26SF | |
| | 32-8 | 31.50 | 95 | 87 | 39 | 71 | 89 | 76 | 299 | 27.0 | SOX8CA32SF | |
| SOX-SL | 36-8 | 40.00 | 109 | | 45 | 78 | 103 | 72 | 388 | 32 | SOX361336 | |
| | 40-8 | 50.00 | 124 | | 51 | 89 | 116 | 84 | 442 | 46 | SOX361340 | |
| | 45-8 | 63.00 | 138 | | 56 | 99 | 130 | 90 | 494 | 63 | SOX361345 | |

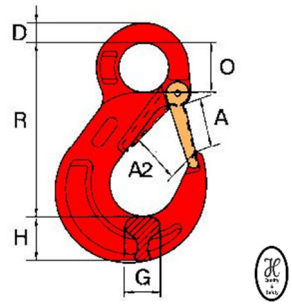

## Inkorthaak met oog / Crochet de racourdissement a oeil / Eye grab hook / Verkürzungshaak
**Type VOX**

| Nominale maat Désignation Nominal size Nenngrösse | WLL CMU [t] | A mm | D mm | G mm | H mm | O mm | R mm | Kg | Art.NR Code Art. Stock No. Art.Nr. | € |
|---|---|---|---|---|---|---|---|---|---|---|
| 6-8 | 1.12 | 8 | 8.5 | 22 | 22 | 13.5 | 53.5 | 0.18 | VOX8CD06 | |
| 7/8-8 | 2.00 | 10 | 10 | 30 | 24 | 16 | 60 | 0.23 | VOX8CD08 | |
| 10-8 | 3.15 | 13 | 11 | 44 | 31 | 21 | 80 | 0.59 | VOX8CD10 | |
| 13-8 | 5.30 | 17 | 16 | 53 | 38 | 26 | 104 | 1.24 | VOX8CD13 | |
| 16-8 | 8.00 | 20 | 19 | 64 | 60 | 30 | 129 | 2.60 | VOX8CD16 | |
| 20-8 | 12.50 | 23 | 22 | 85 | 65 | 36 | 153 | 4.20 | VOX8CD20 | |
| 22-8 | 15.00 | 26 | 30 | 87 | 71 | 42 | 184 | 5.35 | VOX8CD22 | |
| 26-8 | 21.20 | 30.5 | 36 | 100 | 90 | 55 | 213 | 13.0 | VOX8CD26 | |
| 32-8 | 31.50 | 39 | 40 | 93 | 90 | 60 | 240 | 18.6 | VOX8CD32 | |

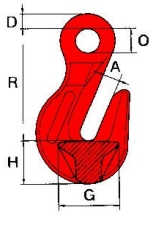


## Inkorthaak met gaffel / Crochet de racourdissement / Clevis Grab hook / Verkürzungshaak
**Type CFX**

| Nominale maat Désignation Nominal size Nenngrösse | WLL CMU [t] | A mm | B mm | C mm | G mm | H mm | R mm | Kg | Art.NR Code Art. Stock No. Art.Nr. | € |
|---|---|---|---|---|---|---|---|---|---|---|
| 6-8 | 1.12 | 8 | 8 | 8.8 | 22 | 22 | 51.5 | 0.2 | CFX8CF06 | |
| 7/8-8 | 2.00 | 10 | 9 | 10 | 30 | 24 | 50 | 0.27 | CFX8CF08 | |
| 10-8 | 3.15 | 13 | 13 | 14 | 44 | 31 | 72 | 0.75 | CFX8CF10 | |
| 13-8 | 5.30 | 17 | 17 | 17 | 53 | 38 | 88 | 1.35 | CFX8CF13 | |
| 16-8 | 8.00 | 20 | 21 | 20 | 64 | 44 | 102 | 2.30 | CFX8CF16 | |
| 20-8 | 12.50 | 24 | 24 | 24 | 85 | 53 | 117 | 4.10 | CFX8CF20 | |
| 22-8 | 15.00 | 26 | 26 | 26 | 97 | 62 | 139 | 5.65 | CFX8CF22 | |
| 26-8 | 21.20 | 30.5 | 30 | 35 | 100 | 90 | 190 | 13.5 | CFX8CF26 | |

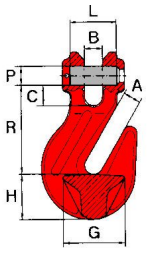


## Inkortklauw met gaffel & veiligheid / Griffe de racourdissement & securité / Shortening clutch with safety / Verkürzungsklaue mit Sicherung
**Type KSX**

| Nominale maat Désignation Nominal size Nenngrösse | WLL CMU [t] | A mm | B mm | C mm | D mm | E mm | F mm | G mm | Kg | Art.NR Code Art. Stock No. Art.Nr. | € |
|---|---|---|---|---|---|---|---|---|---|---|---|
| 6-8 | 1.12 | 8 | 8 | 10 | 8 | 19 | 45 | 23 | 0.21 | KSX8CX06 | |
| 7-8 | 1.50 | 9.5 | 9.5 | 10 | 9.5 | 23.5 | 56 | 29 | 0.48 | KSX8CX07 | |
| 8-8 | 2.00 | 9.5 | 9.5 | 10 | 9.5 | 23.5 | 56 | 29 | 0.48 | KSX8CX08 | |
| 10-8 | 3.15 | 12 | 12 | 14.5 | 12 | 32.5 | 78 | 36 | 1.12 | KSX8CX10 | |
| 13-8 | 5.30 | 15.5 | 15.5 | 18 | 15.5 | 44 | 90 | 35 | 1.83 | KSX8CX13 | |
| 16-8 | 8.00 | 19 | 21 | 21 | 19 | 50 | 106 | 38 | 2.83 | KSX8CX16 | |
| | | **a** | **b** | **l** | | **e** | | | | | |
| 20-8 | 12.50 | 85 | 109 | 246 | | | | | | KSX8TN20 | |
| 22-8 | 15.00 | 94 | 120 | 271 | | | | | | KSX8TN22 | |
| 26-8 | 21.20 | 109 | 135 | 307 | | | | | | KSX8TN26 | |
| 32-8 | 31.50 | 135 | 166 | 376 | | | | | | KSX8TN32 | |

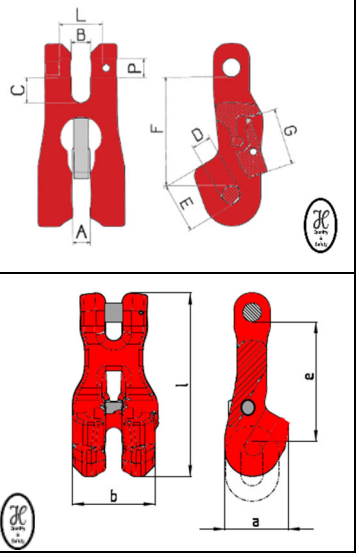


## Inkortklauw met gaffel / Griffe de racourdissement / Shortening clutch / Verkürzungsklaue
**Type KFX**

| Nominale maat Désignation Nominal size Nenngrösse | WLL CMU [t] | A mm | B mm | C mm | D mm | E mm | F mm | Kg | Art.NR Code Art. Stock No. Art.Nr. | € |
|---|---|---|---|---|---|---|---|---|---|---|
| 6-8 | 1.12 | 8 | 8 | 10 | 8 | 19 | 45 | 0.21 | KFX8CX06 | |
| 7-8 | 1.50 | 9.5 | 9.5 | 10 | 9.5 | 23.5 | 56 | 0.48 | KFX8CX07 | |
| 8-8 | 2.00 | 9.5 | 9.5 | 10 | 9.5 | 23.5 | 56 | 0.48 | KFX8CX08 | |
| 10-8 | 3.15 | 12 | 12 | 14.5 | 12 | 32.5 | 78 | 1.12 | KFX8CX10 | |
| 13-8 | 5.30 | 15.5 | 15.5 | 18 | 15.5 | 44 | 90 | 1.83 | KFX8CX13 | |
| 16-8 | 8.00 | 19 | 21 | 21 | 19 | 50 | 106 | 2.83 | KFX8CX16 | |

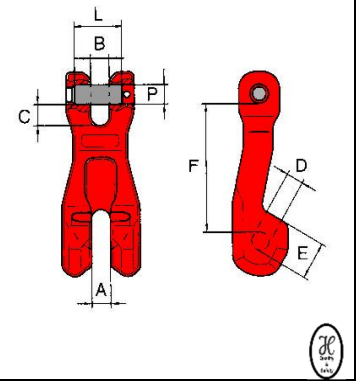

## Inkortklauw met gaffel & veiligheid / Griffe de racourdissement & securité / Shortening clutch with safety / Verkürzungsklaue mit Sicherung
**Type CSH**

| Nominale maat<br>Désignation<br>Nominal size<br>Nenngrösse | WLL<br>CMU<br>[t] | a<br>mm | b<br>mm | d1<br>mm | d2<br>mm | h<br>mm | l<br>mm | m<br>mm | w<br>mm | Kg | Art.NR<br>Code Art.<br>Stock No.<br>Art.Nr. | € |
|---|---|---|---|---|---|---|---|---|---|---|---|---|
| 6-8 | 1.12 | 30 | 8,0 | 17 | 28 | 53 | 82 | 9,5 | 39 | 0.31 | DK31191006 | |
| 8-8 | 2.00 | 37 | 9,5 | 22 | 31 | 66 | 102 | 10,5 | 51 | 0.62 | DK31191008 | |
| 10-8 | 3.20 | 48 | 12,0 | 28 | 40 | 80 | 125 | 15,0 | 66 | 1.24 | DK31191010 | |
| 13-8 | 5.30 | 61 | 15,0 | 35 | 48 | 105 | 159 | 20,0 | 83 | 2.50 | DK31191013 | |
| 16-8 | 8.00 | 74 | 19,0 | 44 | 64 | 133 | 206 | 27,0 | 102 | 4.62 | DK31191016 | |
| 20-8 | 12.50 | 92 | 23,0 | 58 | 77 | 154 | 240 | 27,0 | 117 | 8.03 | DK31191020 | |

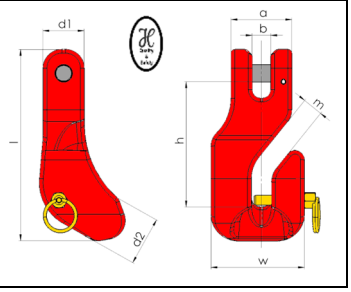


## Sluiting met gaffel / Manille a chappe coulissant / Clevis Shackle / Schäkel mit gabel Haak
**Type CWX**

| Nominale maat<br>Désignation<br>Nominal size<br>Nenngrösse | WLL<br>CMU<br>[t] | A<br>mm | B<br>mm | C<br>mm | D<br>mm | E<br>mm | F<br>mm | G<br>mm | H<br>mm | PxL<br>mm | Kg | Art.NR<br>Code Art.<br>Stock No.<br>Art.Nr. | € |
|---|---|---|---|---|---|---|---|---|---|---|---|---|---|
| 6 | 1.12 | 36 | 9 | 11 | 20 | 45.5 | 59.5 | 23 | 40 | 8x22 | 0.8 | CWX8CW6 | |
| 7/8 | 2.00 | 36 | 9 | 11 | 20 | 45.5 | 59.5 | 23 | 40 | 8x22 | 0.8 | CWX8CW8 | |

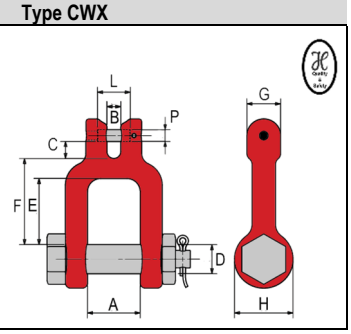


## Container/Gieterijhaak met oog / Crochet de fonderie à œil / Eye foundry hook / Container/ weitmaulhaken mit ose
**Type WOX**

| Nominale maat<br>Désignation<br>Nominal size<br>Nenngrösse | WLL<br>CMU<br>[t] | A<br>mm | D<br>mm | G<br>mm | H<br>mm | O<br>mm | R<br>mm | Kg | Art.NR<br>Code Art.<br>Stock No.<br>Art.Nr. | € |
|---|---|---|---|---|---|---|---|---|---|---|
| 6-8 | 1.12 | 53 | 11 | 22 | 26 | 15 | 102 | 0.61 | WOX8CY06 | |
| 7/8-8 | 2.00 | 62 | 13 | 25 | 29 | 24 | 128 | 0.92 | WOX8CY08 | |
| 10-8 | 3.15 | 76 | 14 | 23 | 30 | 32 | 150 | 1.77 | WOX8CY10 | |
| 13-8 | 5.30 | 89 | 17 | 38 | 40 | 27 | 173 | 2.82 | WOX8CY13 | |
| 16-8 | 8.00 | 102 | 24 | 45 | 48 | 47 | 210 | 5.03 | WOX8CY16 | |
| 20-8 | 12.50 | 114 | 28 | 54 | 60 | 56 | 260 | 7.6 | WOX8CY20 | |
| 22-8 | 15.00 | 127 | 32 | 65 | 69 | 47 | 265 | 13.78 | WOX8GH22 | |
| 26-8 | 21.20 | 136 | 34 | 72 | 80 | 54 | 305 | 19.21 | WOX8GH26 | |
| 32-8 | 31.50 | 165 | 37 | 83 | 95 | 60 | 327 | 24.8 | WOX8GH32 | |

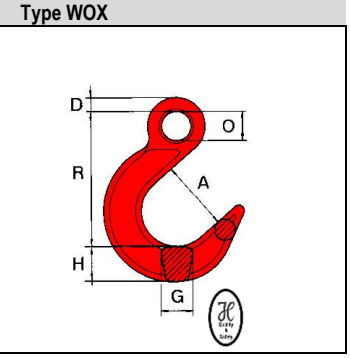


## Container/Gieterijhaak met gaffel / Crochet de fonderie à chappe / Clevis foundry hook / Container/ weitmaulhaken mit gabel
**Type CWGX**

| Nominale maat<br>Désignation<br>Nominal size<br>Nenngrösse | WLL<br>CMU<br>[t] | A<br>mm | B<br>mm | C<br>mm | G<br>mm | H<br>mm | R<br>mm | Kg | Art.NR<br>Code Art.<br>Stock No.<br>Art.Nr. | € |
|---|---|---|---|---|---|---|---|---|---|---|
| 6-8 | 1.12 | 53.5 | 8.5 | 6.5 | 22 | 26 | 91 | 0.70 | CWGX8CYF06 | |
| 7/8-8 | 2.00 | 64 | 10 | 11.5 | 26 | 31 | 120.4 | 1.10 | CWGX8CYF08 | |
| 10-8 | 3.15 | 76 | 13 | 15 | 30 | 34 | 131 | 1.70 | CWGX8CYF10 | |
| 13-8 | 5.30 | 89 | 17 | 17.5 | 40 | 44.5 | 148 | 3.60 | CWGX8CYF13 | |
| 16-8 | 8.00 | 101 | 19 | 21.5 | 45 | 50.5 | 198.5 | 5.60 | CWGX8CYF16 | |

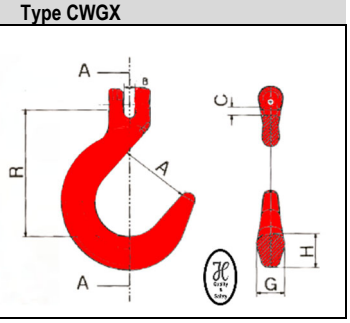

## Wisselstukken. Pieces de rechange Spare parts Ersatzteilen

| Nominale maat-Désignation Nominal size-Nenngrösse | Klepset-trigger<br>Set-déclencheur<br>Triggerset<br>Sperklinkenset | | | | Veiligheidsklepset<br>Set- linguet de securité<br>Safety Latch set<br>Schnepper Set | | | | Gaffelset<br>Chappe-set<br>Clevis pin Set<br>Gabel Set | | | | | | | | As+ Borghuls (A+B)<br>Axe + douille de verrouillage (A+B)<br>Axle+ Locking Bush (A+B)<br>Bolz+ Federhulze (A+B) | |
|---|---|---|---|---|---|---|---|---|---|---|---|---|---|---|---|---|---|---|
| | **Type LSG-LSO-LSW-KSX** | | | | **Type SGX-SOX-CJX** | | | | **Type SGX-LSG-KSX-KFX-WGX-CFX-FHX** | | | | | | | | **Type VGX** | |
| |  | | | |     | | | |  | | | | | | | |   | |
| | Art.NR<br>Code Art.<br>Stock No.<br>Art.Nr. | LSG-LSO-LSW | KSX | € | Art.NR<br>Code Art.<br>Stock No.<br>Art.Nr. | € | Art.NR<br>Code Art.<br>Stock No.<br>Art.Nr | € | Art.NR<br>Code Art.<br>Stock No.<br>Art.Nr. | SGX | LSG | KSX-KFX | WGX | CFX | FHX | € | Art.NR<br>Code Art.<br>Stock No.<br>Art.Nr | € |
| **6-8** | KITCR806 | • | | | KITCB806SL | | KITCB806SF | | KITCKP06 | • | • | • | • | • | • | | KITCL806A | |
| **6-8** | KITCKX806 | | • | | | | | | | | | | | | | | | |
| **7-8** | KITCKX807 | | • | | | | | | | | | | | | | | KITCL807A | |
| **7/8-8** | KITCR808 | • | | | KITCB808SL | | KITCB808SF | | KITCKP08 | • | • | | • | • | • | | | |
| **8-8** | KITCKX808 | | • | | | | | | KITCKPX08 | | | • | | | | | KITCL808A | |
| **10-8** | KITCR810 | • | | | KITCB810SL | | KITCB8010SF | | KITCKP10 | • | • | • | | • | • | | KITCL810A | |
| **10-8** | KITCKX810 | | • | | | | | | KITCKP10F | | | | • | | | | | |
| **13-8** | KITCR813 | • | | | KITCB813SL | | KITCB8013SF | | KITCKP13 | • | • | • | | • | • | | KITCL813A | |
| **13-8** | KITCKX813 | | • | | | | | | KITCKP13F | | | | • | | | | | |
| **16-8** | KITCR816 | • | | | | | | | KITCKP16 | | • | • | | • | • | | KITCL816A | |
| **16-8** | KITCKX816 | | • | | | | | | KITCKP16B | • | | | • | | | | | |
| **SGX 16-8** | | | | | | | KITCB816BSF | | | | | | | | | | | |
| **SOX 16-8** | | | | | | | KITCA816SF | | | | | | | | | | | |
| **20-8** | KITCR820 | • | | | | | KITCB820BSF | | KITCKP20 | | | | | • | | | KITCL820A | |
| **20-8** | | | | | | | | | KITCKP20B | • | • | | | | | | | |
| **22-8** | KITCR822 | • | | | | | KITCB822SF | | KITCKP22 | • | • | | | • | | | KITCL822A | |
| **26-8** | KITKW826 | • | | | | | KITCB826SF | | KITCKP26 | • | | | | • | | | KITCL826A | |
| **32-8** | KITKW832 | • | | | | | KITCB832SF | | | | | | | | | | KITCL832A | |
| **CJX-1** | | | | | | | KITCKP08 | | | | | | | | | | | |
| **CJX-2** | | | | | | | KITCKP10 | | | | | | | | | | | |
| **CJX-3** | | | | | | | KITCKP10 | | | | | | | | | | | |
| **CJX-4** | | | | | | | KITCKP13 | | | | | | | | | | | |
| **CJX-5** | | | | | | | KITCKP13 | | | | | | | | | | | |
| **CJX-6** | | | | | | | KITCKP13 | | | | | | | | | | | |
| **CJX-8** | | | | | | | KITCKP22 | | | | | | | | | | | |
| **CJX-10** | | | | | | | KITCKP22 | | | | | | | | | | | |

## Wisselstukken **SIKA**. Pieces de rechange **SIKA** Spare parts **SIKA** Ersatzteilen **SIKA**

| Nominale maat-Désignation Nominal size-Nenngrösse | Klepset-trigger<br>Set-déclencheur<br>Triggerset<br>Sperklinkenset | | | Veiligheidsklepset<br>Set- linguet de securité<br>Safety Latch set<br>Schnepper Set | | | | Gaffelset<br>Chappe-set<br>Clevis pin Set<br>Gabel Set | | | | | | | | As+ Borghuls<br>Axe + douille de verrouillage)<br>Axle+ Locking Bush)<br>Bolz+ Federhulze | |
|---|---|---|---|---|---|---|---|---|---|---|---|---|---|---|---|---|---|
| | **Type CLS-CLG-CLW** | | | **Type GHS-OHS** | | **Type SGB-SOB** | | **Type GHS-SGB- EKF-VKF VHG-KV-TK-AG-CLG** | | | | | | | | **Type VG** | |
| |  | | |  | |  | |  | | | |  | | | |  | |
| | Art.NR<br>Code Art.<br>Stock No.<br>Art.Nr. | CLS-CLG-CLW | € | Art.NR<br>Code Art.<br>Stock No.<br>Art.Nr. | € | Art.NR<br>Code Art.<br>Stock No.<br>Art.Nr | € | Art.NR<br>Code Art.<br>Stock No.<br>Art.Nr. | GHS | SGB | EKF-VKF VHG | KV-TK | AG | CLG | € | Art.NR<br>Code Art.<br>Stock No.<br>Art.Nr | € |
| **6-8** | | | | 132831010 | | 235131006 | | 232731060 | • | • | • | • | • | | | 227072006 | |
| **6-8** | 233233007 | • | | | | | | 233236006 | | | | | | • | | | |
| **6/7-8** | | | | 132831010 | | | | 232731067 | • | | | | | | | | |
| **7** | | | | 132831016 | | 235131007 | | 232731070 | • | • | • | • | • | | | | |
| **8-8** | | | | 132831016 | | 235131008 | | 232731080 | • | • | • | • | • | | | 227072007 | |
| **8-8** | 233233007 | • | | | | | | 233236007 | | | | | | • | | | |
| **10-8** | | | | 132831025 | | 235131010 | | 232731100 | • | • | • | • | • | | | 227072010 | |
| **10.8** | 233233010 | • | | | | | | 233236010 | | | | | | • | | | |
| **13-8** | | | | 132831050 | | 235131013 | | 232731130 | • | • | • | • | • | | | 227072013 | |
| **13-8** | 233233013 | • | | | | | | 233236013 | | | | | | • | | | |
| **16-8** | | | | 132831063 | | 235131016 | | 232731160 | • | • | • | • | • | | | 227072016 | |
| **16-8** | 233233016 | • | | | | | | 233236016 | | | | | | • | | | |
| **18-8** | | | | | | 235131018 | | 232731180 | | • | | | | | | | |
| **20-8** | | | | 132831063 | | 235131019 | | 232731180 | • | • | • | • | | | | 227072018 | |
| **20-8** | 233233018 | • | | | | | | 233236020 | | | | | | • | | | |
| **22-8** | | | | | | | | | | | | | | | | 227072022 | |
| **22-8** | 233233022 | • | | | | | | 233236022 | | | | | | • | | | |
| **26-8** | 233233026 | • | | | | | | 233236026 | | | | | | • | | 227072026 | |
| **32-8** | | | | | | | | | | | | | | | | | |

SIKA-Inkortklauw – enkel | SIKA-Griffes de racourdissement | SIKA–Shortening clutch single | SIKA-Verkürzungsklaue einfach
**Type EKF**

| Nominale maat<br>Désignation<br>Nominal size<br>Nenngrösse | WLL<br>CMU<br>[t] | d<br>mm | h<br>mm | t<br>mm | KG | Art.NR<br>Code Art.<br>Stock No.<br>Art.Nr. | € |
|---|---|---|---|---|---|---|---|
| 6-8 | 1.12 | 8 | 14 | 81 | 0.3 | 274521006 | |
| 7-8 | 1.50 | 8.8 | 18 | 97 | 0.5 | 274521007 | |
| 8-8 | 2.00 | 10 | 19 | 104 | 0.8 | 274521008 | |
| 10-8 | 3.15 | 12 | 26 | 139 | 1.2 | 274521010 | |
| 13-8 | 5.30 | 16 | 36 | 179 | 2.5 | 274521013 | |

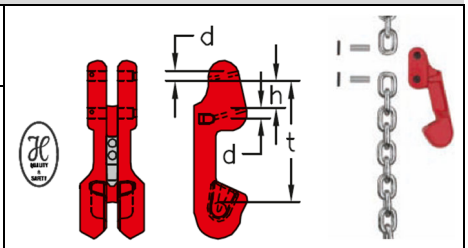


SIKA-Inkortklauw – dubbel | SIKA-Griffes de racourdissement | SIKA –Shortening clutch double | SIKA-Verkürzungsklaue doppel
**Type DVKF**

| Nominale maat<br>Désignation<br>Nominal size<br>Nenngrösse | WLL<br>CMU<br>[t] | l<br>mm | t<br>mm | KG | Art.NR<br>Code Art.<br>Stock No.<br>Art.Nr. | € |
|---|---|---|---|---|---|---|
| 6-8 | 1.12 | 100 | 79 | 0.3 | 274511006 | |
| 7-8 | 1.50 | 104 | 80 | 0.4 | 274511007 | |
| 8-8 | 2.00 | 142 | 91 | 0.9 | 274511008 | |
| 10-8 | 3.15 | 162 | 121 | 1.3 | 274511010 | |
| 13-8 | 5.30 | 210 | 160 | 2.5 | 274511013 | |

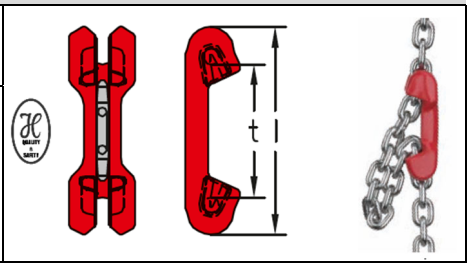


S-haak-G80 | Crochet S-G80 | S-Hook-G80 | S-Haak-G80
**Type S-OPEN**
**Type S-CLOSED**

| Nominale maat<br>Désignation<br>Nominal size<br>Nenngrösse<br>SWL-CMU | a<br>mm | b<br>mm | c<br>mm | d<br>mm | KG | Open<br>Ouvert<br>Open<br>offen | | Gesloten<br>Fermé<br>Closed<br>Geschlossen | |
|---|---|---|---|---|---|---|---|---|---|
| | | | | | | Art.NR<br>Code Art.<br>Stock No.<br>Art.Nr. | € | Art.NR<br>Code Art.<br>Stock No.<br>Art.Nr. | € |
| 200KG | 10 | 80 | 25 | 25 | 0.1 | 234730002 | | 234740002 | |
| 300KG | 13 | 100 | 30 | 30 | 0.2 | 234730003 | | 234740003 | |
| 500KG | 16 | 130 | 40 | 40 | 0.5 | 234730005 | | 234740005 | |
| 750KG | 18 | 160 | 50 | - | 0.7 | 234730007 | | 234740007 | |
| 1000KG | 20 | 180 | 55 | 55 | 1.0 | 234730010 | | 234740010 | |
| 1250KG | 22 | 200 | 60 | 60 | 1.5 | 234730012 | | 234740012 | |
| 1500KG | 26 | 220 | 65 | 65 | 2.0 | 234730015 | | 234740015 | |
| 2000KG | 32 | 260 | 80 | 80 | 4.3 | 234730020 | | 234740020 | |
| 3000KG | 36 | 320 | 95 | 95 | 5.8 | 234730030 | | 234740030 | |
| 4000KG | 40 | 360 | 110 | - | 7.9 | 234730040 | | - | |
| 5000KG | 45 | 400 | 120 | 120 | 11.0 | 234730050 | | 234740050 | |
| 6000KG | 50 | 450 | 135 | - | 15.3 | 234730060 | | - | |

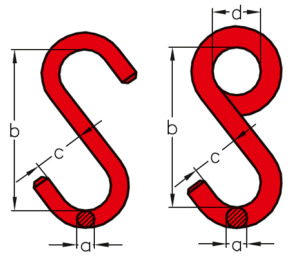


Vatenhaak | Pattes a fût | Barrel hook | Fass haken
**Type BH**

| WLL PER PAAR<br>CMU PAR PAIRE<br>WLL PER PAIR<br>WLL PER PAAR | b<br>mm | d<br>mm | j<br>mm | m<br>mm | t<br>mm | KG | Art.NR<br>Code Art.<br>Stock No.<br>Art.Nr. | € |
|---|---|---|---|---|---|---|---|---|
| 1000KG | 40 | 17 | 115 | 40 | 86 | 1.5 | 233730016 | |

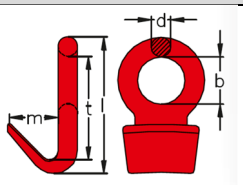


Topschalm met gaffel | Anneau simples à chape | Master link clevis type | Aufhängeglied mit gabel
**Type AG**
Conform EN 1677-4

| Nominale maat<br>Désignation<br>Nominal size<br>Nenngrösse | WLL<br>CMU<br>[t] | b<br>mm | c<br>mm | d1<br>mm | d2<br>mm | h<br>mm | l<br>mm | s<br>mm | t<br>mm | w<br>mm | KG | Art.NR<br>Code Art.<br>Stock No.<br>Art.Nr. | € |
|---|---|---|---|---|---|---|---|---|---|---|---|---|---|
| 6-8 | 1.12 | 6,5 | 32 | 8 | 13 | 103 | 160 | 18 | 133 | 60 | 0.4 | 207680006 | |
| 7-8 | 1.50 | 7,5 | 36 | 8,8 | 15 | 102 | 164 | 21 | 133 | 58 | 0.6 | 207680007 | |
| 8-8 | 2.00 | 9 | 40 | 10 | 16 | 105 | 172 | 21 | 138 | 60 | 0.7 | 207680008 | |
| 10-8 | 3.15 | 12 | 50 | 12 | 18 | 128 | 207 | 23 | 167 | 75 | 1.1 | 207680010 | |
| 13-8 | 5.30 | 15 | 60 | 16 | 22 | 150 | 254 | 35 | 203 | 90 | 2.2 | 207680013 | |
| 16-8 | 8.00 | 17 | 75 | 20 | 26 | 165 | 292 | 40 | 230 | 100 | 3.6 | 207680016 | |

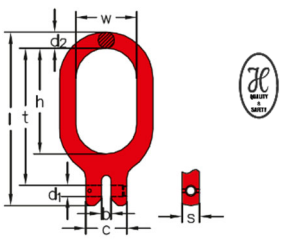

Draainagel met kogellager
**Type KLW**

Swivel avec roulement
**Type KLW**

Swivel -Ball Bearing
**Type KLW**

Kugellagerwirbel
**Type KLW**

| Nominale maat<br>Désignation<br>Nominal size<br>Nenngrösse | WLL<br>CMU<br>[t] | b<br>mm | c1<br>mm | c2<br>mm | d<br>mm | l<br>mm | t<br>mm | KG | Art.NR<br>Code Art.<br>Stock No.<br>Art.Nr. | € |
|---|---|---|---|---|---|---|---|---|---|---|
| 8-8 | 2.00 | 36 | 30 | 49 | 17 | 188 | 154 | 1.2 | 266761008 | |
| 10-8 | 3.15 | 38 | 33 | 51 | 19 | 204 | 166 | 1.5 | 266761010 | |
| 13-8 | 5.30 | 60 | 60 | 89 | 24 | 314 | 258 | 5.0 | 266761013 | |

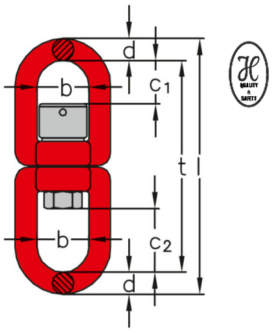


Lasbeugel met veer
**Type APA+ (M)**
WLL (F) in alle hijsrichtingen
Respecteer de lasinstructies

Anneaux de levage à souder avec resort
**Type APA+ (M)**
**CMU (F) dans toutes directions**
Respecter les instructions de soudage

Weld-on lashing eye with spring
**Type APA+ (M)**
**WLL (F) in all directions**
Respect the welding instructions

Anschweiss-bügel mit feder
**Type APA+ (M)**
**WLL (F) in alle richtingen**
Beachten Sie die Schweißanweisungen

| Nominale maat<br>Désignation<br>Nominal size<br>Nenngrösse | WLL<br>CMU<br>[t] | a<br>mm | b<br>mm | d<br>mm | h<br>mm | t<br>mm | w<br>mm | KG | Art.NR<br>Code Art.<br>Stock No.<br>Art.Nr. | € |
|---|---|---|---|---|---|---|---|---|---|---|
| 1 | 1.12 | 36 | 39 | 13.5 | 37 | 66 | 40.5 | 0.4 | 263950010 | |
| 2 | 2.00 | 38 | 40 | 14 | 43 | 78 | 42 | 0.46 | 263950020 | |
| 3 | 3.15 | 37 | 47 | 17.5 | 43 | 79 | 46 | 0.68 | 263950030 | |
| 5 | 5.30 | 48 | 60 | 22 | 52 | 93 | 54 | 1.4 | 263950050 | |
| 8 | 8.00 | 66 | 73 | 26.5 | 62 | 115 | 70 | 2.6 | 263950080 | |
| 15 | 15.00 | 88 | 90 | 34.5 | 94 | 154 | 97 | 5.5 | 263950150 | |

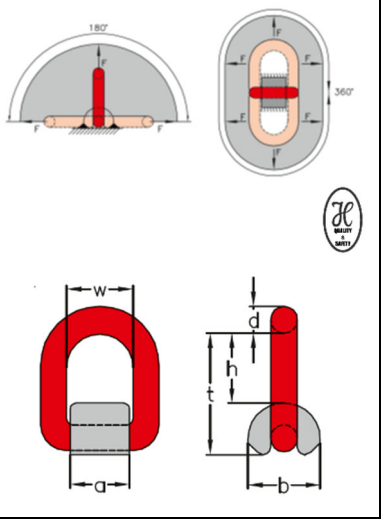


Lasbeugel zonder veer
**Type APA+**
WLL (F) in alle hijsrichtingen
Respecteer de lasinstructies

Anneaux de levage à souder sans resort
**Type APA+**
**CMU (F) dans toutes directions**
Respecter les instructions de soudage

Weld-on lashing eye without spring
**Type APA+**
**WLL (F) in all directions**
Respect the welding instructions

Anschweiss-bügel ohne feder
**Type APA+**
**WLL (F) in alle richtingen**
Beachten Sie die Schweißanweisungen

| Nominale maat<br>Désignation<br>Nominal size<br>Nenngrösse | WLL<br>CMU<br>[t] | a<br>mm | b<br>mm | d<br>mm | h<br>mm | t<br>mm | w<br>mm | KG | Art.NR<br>Code Art.<br>Stock No.<br>Art.Nr. | € |
|---|---|---|---|---|---|---|---|---|---|---|
| 1 | 1.12 | 36 | 39 | 13.5 | 37 | 66 | 40.5 | 0.4 | 263951010 | |
| 2 | 2.00 | 38 | 40 | 14 | 43 | 78 | 42 | 0.46 | 263951020 | |
| 3 | 3.15 | 37 | 47 | 17.5 | 43 | 79 | 46 | 0.68 | 263951030 | |
| 5 | 5.30 | 48 | 60 | 22 | 52 | 93 | 54 | 1.4 | 263951050 | |
| 8 | 8.00 | 66 | 73 | 26.5 | 62 | 115 | 70 | 2.6 | 263951080 | |
| 15 | 15.00 | 88 | 90 | 34.5 | 94 | 154 | 97 | 5.5 | 263951150 | |

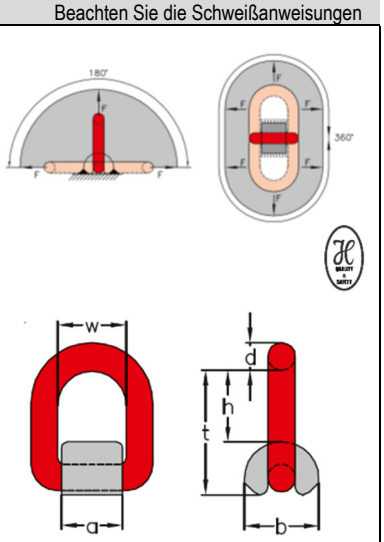

## Haak met wartel - kogellager / Crochet à emerilllon -roulement / Swivel hook – ball bearing / Wirbellasthaak -kugellager

**Type DKWH**
Conform EN1677-2

| Nominale maat Désignation Nominal size Nenngrösse | WLL CMU [t] | A mm | B mm | F mm | M mm | L1 mm | L mm | Kg | Art.NR Code Art. Stock No. Art.Nr. | € |
|---|---|---|---|---|---|---|---|---|---|---|
| 6-8 | 1.12 | 30 | 32 | 24 | 59 | 136 | 166 | 0.62 | DK31004000 | |
| 8-8 | 2.00 | 42 | 36 | 28.5 | 88 | 170 | 208 | 1.0 | DK31004001 | |
| 10-8 | 3.15 | 50 | 42 | 31 | 105 | 205 | 251 | 1.7 | DK31004002 | |
| 13-8 | 5.30 | 58 | 50 | 40 | 135 | 242 | 296 | 3.0 | DK31004003 | |
| 16-8 | 8.00 | 63.5 | 61 | 45 | 161 | 292 | 361 | 5.6 | DK31004004 | |
| 20-8 | 12.50 | 86 | 74 | 56 | 185 | 356 | 431 | 9.5 | DK31004005 | |
| 22-8 | 15.00 | 106 | 97 | 75 | 218 | 445 | 512 | 13.8 | DWHEG822 | |
| 26-8 (*) | 22.00 | 96 | 123 | 76 | 290 | 465 | 565 | 38.4 | DWHEG826 | |
| 32-8 (*) | 30.00 | 94 | 135 | 80 | 300 | 495 | 603 | 54.4 | DWHEG832 | |

(*) : According to DIN15401 – Temp.range:-20°C ⇔ 200°C – Test Load : 2x WLL

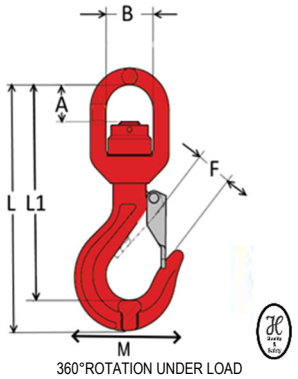

360°ROTATION UNDER LOAD

### Veiligheidsklepset / Set- linguet de securité / Safety Latch set / Satz Sicherungsfalle

| | | | |
|---|---|---|---|
| 6-8 | KITDKWH06 | | |
| 8-8 | KITDKWH08 | | |
| 10-8 | KITDKWH10 | | |
| 13-8 | KITDKWH13 | | |
| 16-8 | KITDKWH16 | | |
| 20-8 | KITDKWH20 | | |
| 22-8 | KITDKWH22 | | |
| 26-8 | KITDKWH26 | | |
| 32-8 | KITDKWH32 | | |



## Veiligheidshaak met kogellager / Crochet de securité avec roulement / Self-Locking hook – ball bearing / Sicherheitslasthaak -kugellager

**Type LSWK**

| Nominale maat Désignation Nominal size Nenngrösse | WLL CMU [t] | A mm | B mm | C mm | L1 mm | L mm | T mm | E mm | M mm | N mm | Kg | Art.NR Code Art. Stock No. Art.Nr. | € |
|---|---|---|---|---|---|---|---|---|---|---|---|---|---|
| 6-8 | 1.12 | 33 | 12 | 34 | 160 | 194 | 28 | 32 | 70 | 15 | 0.62 | DK31221067 | |
| 8-8 | 2.00 | 36 | 13 | 40 | 202 | 240 | 35 | 39 | 88 | 20 | 1.0 | DK31221080 | |
| 10-8 | 3.15 | 42 | 16 | 48 | 237 | 283 | 45 | 48 | 108 | 26 | 1.7 | DK31221100 | |
| 13-8 | 5.30 | 50 | 17 | 58 | 282 | 343 | 53 | 65 | 134 | 33 | 3.0 | DK31221300 | |
| 16-8 | 8.00 | 61 | 22 | 60 | 342 | 419 | 63 | 65 | 169 | 38 | 5.6 | DK31221600 | |
| 20-8 | 12.50 | 76 | 27 | 76 | 400 | 483 | 86 | 85 | 186 | 50 | 9.5 | DK31222000 | |
| 22-8(*) | 15.00 | 97 | 33 | 95 | 457 | 520 | 80 | 80 | - | 49 | 18 | DK31222200 | |
| 26-8(*) | 21.2 | 123 | 42 | 116 | 535 | 604 | 99 | 99 | - | 56 | 32 | DK31222600 | |
| 32-8(*) | 31.5 | 123 | 42 | 115 | 583 | 664 | 120 | 120 | - | 63 | 38.5 | DK31223200 | |

(*) DNV GL-ST-0378 (Offshore and Platform Lifting Appliance)

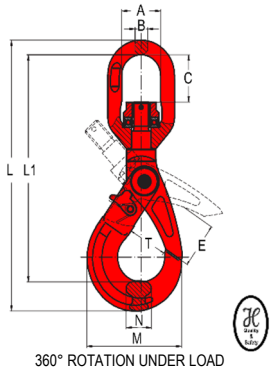

360° ROTATION UNDER LOAD

### Klepset-trigger / Set-déclencheur / Safety Trigger set / Sperrklinkset

| | | | |
|---|---|---|---|
| 6-8 | KITLSWK06 | | |
| 8-8 | KITLSWK08 | | |
| 10-8 | KITLSWK10 | | |
| 13-8 | KITLSWK13 | | |
| 16-8 | KITLSWK16 | | |
| 20-8 | KITLSWK20 | | |



## Haak met wartel - kogellager / Crochet à emerilllon -roulement / Swivel hook – ball bearing / Wirbellasthaak -kugellager

**Type DWDE**
Conform DIN 15402 – Grade V

| Nominale maat Désignation Nominal size Nenngrösse | WLL [t] | A mm | B mm | D mm | H mm | K mm | P mm | T mm | Kg | Art.NR Code Art. Stock No. Art.Nr. | € |
|---|---|---|---|---|---|---|---|---|---|---|---|
| 2.5T-V | 2.50 | 41 | 38 | 17 | 38 | 200 | 25 | 33 | 2.9 | DWDE2500V | |
| 5.4T-V | 5.40 | 64 | 50 | 23 | 43 | 233 | 26 | 38 | 5.1 | DWDE5400V | |

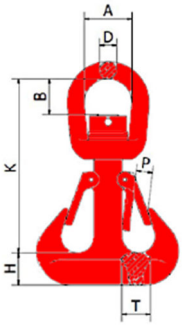

360° ROTATION UNDER LOAD

Kip-containerhaak met gaffel
**Type RAK**

Crochet pour conteneur à déchets
**Type RAK**

Clevis Waste Container Hook
**Type RAK**

Absetzkipperöse mit Gabelkopf
**Type RAK**

| Nominale maat Désignation Nominal size Nenngrösse | WLL [t] | A mm | B mm | C mm | H mm | L mm | Kg | Art.NR Code Art. Stock No. Art.Nr. | € |
|---|---|---|---|---|---|---|---|---|---|
| 13-8 | 5.30 | 16 | 60 | 72 | 104 | 195 | 1.9 | KS31921300 | |
| 13-8 | Klepset-Set linguet de securité-Safety latch set-Sicherungsfalle Satz | | | | | | 0.40 | KS31921301 | |



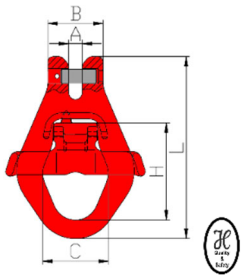


D-beugel en moer uit één smeedstuk volgens D-sluiting DIN 82101 form c
D-beugel en bout verzinkt
**Type D-Sluiting Plus / verzinkt**

Manille et écrou forgés- une matrice Conforme manille DIN 82101 form c
Manille et boulon galvanisé
**Type D-Sluiting Plus galvanisé**

Shackle and nut forged in one die Similar to shackle DIN 82101 form c
Bow and bolt galvanized
**Type D-Shackle Plus/galvanised**

Schäkel und Mutter einer Schmiedeform Ähnlich Schäkel DIN 82101 Form C
Bügel und Bolzen verzinkt
**Type D-Sluiting Plus /verzinkt**

| Nominale maat Désignation Nominal size Nenngrösse | WLL CMU [t] | b1 | b2 | d1 | d2 | d3 | d4 | h1 | Kg | Art.NR Code Art. Stock No. Art.Nr. | € |
|---|---|---|---|---|---|---|---|---|---|---|---|
| 6-8 | 1,12 | 14 | 30 | 8 | 10 | 20 | M 10 | 30,0 | 0.09 | 0400004V | |
| 8-8 | 2,00 | 17 | 37 | 10 | 12 | 24 | M 12 | 36,0 | 0.20 | 0400006V | |
| 10-8 | 3,15 | 21 | 47 | 13 | 15 | 32 | M 16 | 49,0 | 0.40 | 0400010V | |
| 13-8 | 5,30 | 27 | 61 | 17 | 19 | 40 | M 20 | 61,0 | 0.81 | 0400016V | |
| 14-8 | 6,00 | 30 | 68 | 19 | 21 | 44 | M 22 | 67,0 | 1.08 | 0400020V | |
| 16-8 | 8,00 | 33 | 75 | 21 | 23 | 48 | M 24 | 73,0 | 1.42 | 0400025V | |
| 18-8 | 10,00 | 38 | 86 | 24 | 26 | 54 | M 27 | 83,5 | 2.03 | 0400030V | |
| 20-8 | 12,50 | 42 | 96 | 27 | 29 | 60 | M 30 | 91,0 | 2.70 | 0400040V | |
| 22-8 | 15,00 | 47 | 107 | 30 | 33 | 72 | M 36 | 111,0 | 4.40 | 0400050V | |
| 26-8 | 21,20 | 53 | 121 | 34 | 37 | 78 | M 39 | 119,5 | 5.90 | 0400060V | |

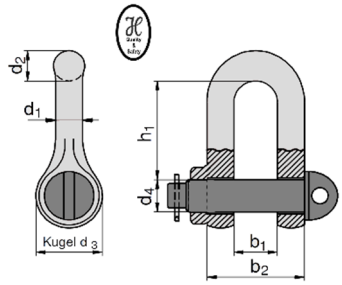


Markering: CE,WLL,Nom,Maat
Markage avec E,CMU,Désignation
Marked with CE,WLL, Nominal Size
Gestempelt mit CE,WLL,Nenngrösse

Verbindingsbeugel met borgmoer
**Type U-Lock**

Coupleur avec écrou de sécurité
**Type U-Lock**

Coupling Shackle with safety nut
**Type U-Lock**

U-Schäkel mit Sicherungsmuttern
**Type U-Lock**

| Nominale maat Désignation Nominal size Nenngrösse | WLL CMU [t] | E mm | B mm | D mm | S mm | A mm | M mm | Kg | Art.NR Code Art. Stock No. Art.Nr. | € |
|---|---|---|---|---|---|---|---|---|---|---|
| 5/6-8 | 1.12 | 33 | 21 | 9 | 11 | 17 | 7 | 0,08 | UL74647 | |
| 7-8 | 1.50 | 49 | 28 | 13 | 16 | 24 | 9 | 0,22 | UL74844 | |
| 8-8 | 2.00 | 48 | 28 | 13 | 16 | 24 | 10 | 0,22 | UL74884 | |
| 10-8 | 3.15 | 60 | 35 | 16 | 20 | 28 | 12 | 0,41 | UL74663 | |
| 13-8 | 5.30 | 72 | 39 | 18 | 24 | 34 | 16 | 0,65 | UL20827 | |
| 16-8 | 8.00 | 80 | 47 | 23 | 32 | 44 | 20 | 1,34 | UL20828 | |
| 19/20-8 | 12.50 | 96 | 56 | 26 | 36 | 52 | 24 | 2,03 | UL20829 | |
| 26-8 | 21.20 | 121 | 77 | 36 | 49 | 74 | 33 | 4,70 | UL45066 | |

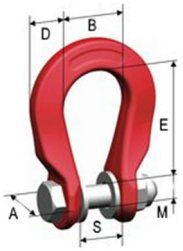


Max. 100°C

Spindelspanner Grade 80
**Type SPDJJ**
DIN EN 1677-1 / DIN EN 12195-3

Elément de serrage de la tige Grade 80
**Type SPDJJ**
DIN EN 1677-1 / DIN EN 12195-3

Spindle tensioning devices Grade 80
**Type SPDJJ**
DIN EN 1677-1 / DIN EN 12195-3

Spindelspanner Grade 80
**Type SPDJJ**
DIN EN 1677-1 / DIN EN 12195-3

| Nominale maat Désignation Nominal size Nenngrösse | Lifting **WLL CMU** [t] | Lashing **LC Max** [kN] | Thread Design mm | Range Min mm | Range Max mm | Take-Up mm | KG | Art.NR Code Art. Stock No. Art.Nr. | € |
|---|---|---|---|---|---|---|---|---|---|
| 6-8 | 1.12 | 22 | M12 | 230 | 320 | 90 | 1.00 | DK31801006 | |
| 8-8 | 2.00 | 40 | TR16 | 330 | 445 | 115 | 1.90 | DK31801008 | |
| 10-8 | 3.15 | 63 | TR22 | 460 | 670 | 220 | 4.15 | DK31801010 | |
| 13-8 | 5.30 | 100 | TR22 | 520 | 770 | 250 | 6.45 | DK31801013 | |
| 16-8 | 8.00 | 160 | TR30 | 540 | 790 | 250 | 9.45 | DK31801016 | |

DIN EN 1677-1: Gebruikt als hijskettingcomponent voor variabele lengte instelling van de kettingleng
DIN EN 12195-3: Gebruikt als sjorkettingcomponent voor variabele lengte instelling van de kettinleng

*DIN EN 1677-1: utilisé comme élément de chaîne de levage pour un réglage de la longueur des élingues*
*DIN EN 12195-3: utilisé comme élément de chaîne d'arrimage pour un réglage de la longueur de l'élingue*

DIN EN 1677-1-G80: Used as lifting chain component for variable length adjustment of chain sling.
DIN EN 12195-3-Grade80: Used as a lashing chain component for variable length adjustment of the chain sling

*DIN EN 1677-1: Verwendung als Hebekettenbauteil zur variablen Längenverstellung von Anschlagketten*
*DIN EN 12195-3: Verwendung als Zurrkettenbauteil zur variablen Längenverstellung des Kettengehänges*

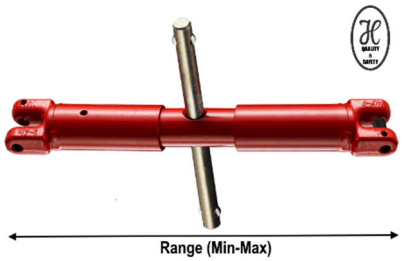


- Spindel met uitdraaiblokkering en schroefdraadbescherming
- Tige avec blocage de la sortie & avec protection du filetage
- Spindle with turn-out lock and thread protection
- Spindel Ausdrehsicherung und Gewindeschutz

| Verbindingsbeugel met gaffel<br>Form c<br>**Type TWN0870** | Coupleur a chappe<br>Form c<br>**Type TWN0870** | Coupling Shackle with clevis<br>Form c<br>**Type TWN0870** | Schäkel mit gabel<br>Form c<br>**Type TWN0870** |
|---|---|---|---|

| Nominale maat<br>Désignation<br>Nominal size<br>Nenngrösse | WLL<br>CMU<br>[t] | E<br>mm | D1<br>mm | D2<br>mm | C<br>mm | B1<br>mm | B2<br>mm | Kg | Art.NR<br>Code Art.<br>Stock No.<br>Art.Nr. | € |
|---|---|---|---|---|---|---|---|---|---|---|
| 10-8 | 3,15 | 49 | 15 | 16 | 32 | 21 | 47 | 0,35 | F30311 | |
| 13-8 | 5,30 | 61 | 19 | 20 | 40 | 27 | 61 | 0,74 | F30321 | |
| 16-8 | 8.00 | 73 | 23 | 24 | 48 | 33 | 75 | 1,30 | F30331 | |
| 18/20-8 | 12,50 | 91 | 29 | 30 | 60 | 42 | 96 | 2,60 | F30341 | |
| 22-8 | 15.00 | 111 | 33 | 36 | 72 | 47 | 107 | 4,00 | F30351 | |
| 26-8 | 21,20 | 120 | 37 | 39 | 78 | 53 | 121 | 5,70 | F30361 | |
| 28-8 | 25.00 | 140 | 41 | 45 | 90 | 60 | 136 | 10,00 | F30371 | |
| 32-8 | 31,50 | 147 | 45 | 48 | 96 | 66 | 150 | 10,50 | F30381 | |
| 36-8 | 40 | 158 | 50 | 52 | 104 | 73 | 167 | 13,90 | F30391 | |
| 40-8 | 50 | 185 | 55 | 60 | 120 | 81 | 185 | 20,50 | F30401 | |
| 45-8 | 63 | 211 | 61 | 68 | 136 | 90 | 206 | 26,60 | F30411 | |

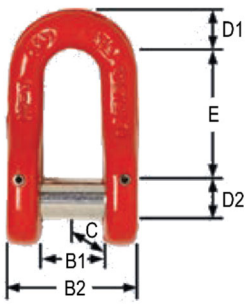


| Balanceerjuk<br>**Type TDX**<br>EN 1677-1 | Balanceur elingue<br>**Type TDX**<br>EN 1677-1 | Sling balancer<br>**Type TDX**<br>EN 1677-1 | Ausgleichwippe<br>**Type TDX**<br>EN 1677-1 |
|---|---|---|---|

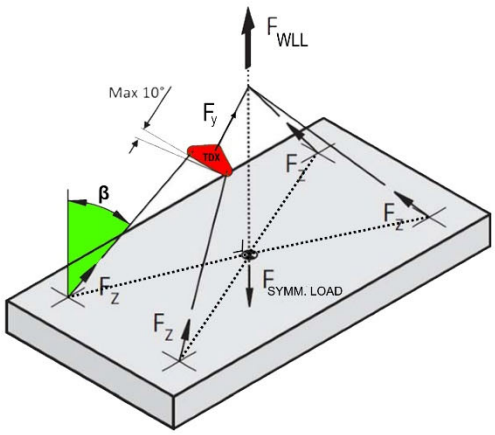


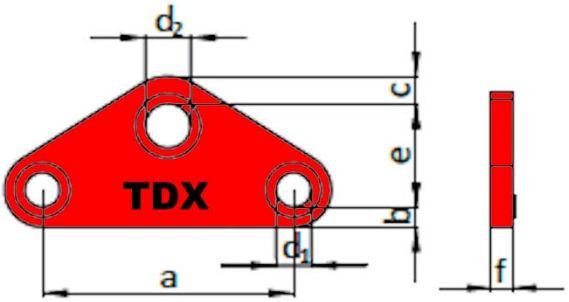


| Nominale maat<br>Désignation<br>Nominal size<br>Nenngrösse | WLL-CMU [t]<br>0°< β ≤ 45° | | 45°< β ≤ 60° | | e<br>mm | a<br>mm | d1<br>mm | d2<br>mm | b<br>mm | c<br>mm | f<br>mm | d1<br>mm | d2<br>mm | TDX<br>MBL<br>[kN] | Kg | Art.Nr<br>Code Art.<br>Stock No.<br>Art.Nr. | € |
|---|---|---|---|---|---|---|---|---|---|---|---|---|---|---|---|---|---|
| | Fy | **FWLL** | Fy | **FWLL** | | | | | | | | | | | | | |
| 6-8 | 1.60 | **3.20** | 1.12 | **2.24** | 42 | 100 | 14 | 18 | 8 | 11 | 10 | 14 | 18 | 71 | 0.40 | TDXBAL806 | |
| 8-8 | 2.80 | **5.60** | 2.00 | **4.00** | 56 | 130 | 18 | 22 | 10 | 15 | 12 | 18 | 22 | 124 | 0.80 | TDXBAL808 | |
| 10-8 | 4.25 | **8.50** | 3.15 | **6.30** | 70 | 160 | 22 | 28 | 13 | 19 | 15 | 22 | 28 | 200 | 1.50 | TDXBAL810 | |
| 13-8 | 7.50 | **15.00** | 5.30 | **10.60** | 91 | 210 | 28 | 40 | 16 | 25 | 20 | 28 | 40 | 340 | 3.40 | TDXBAL813 | |
| 16-8 | 11.20 | **22.40** | 8.00 | **16.00** | 110 | 260 | 36 | 42 | 20 | 30 | 25 | 36 | 42 | 490 | 6.60 | TDXBAL816 | |
| 18-8 | 14.00 | **28.00** | 10.00 | **20.00** | 130 | 290 | 40 | 54 | 23 | 34 | 25 | 40 | 54 | 628 | 8.40 | TDXBAL818 | |
| 20-8 | 17.00 | **34.00** | 12.50 | **25.00** | 130 | 300 | 42 | 54 | 25 | 35 | 30 | 42 | 54 | 785 | 10.90 | TDXBAL820 | |
| 22-8 | 21.20 | **42.40** | 15.00 | **30.00** | 140 | 330 | 46 | 56 | 28 | 39 | 35 | 46 | 56 | 950 | 15.20 | TDXBAL822 | |
| 26-8 | 30.00 | **60.00** | 21.20 | **42.40** | 170 | 390 | 54 | 66 | 33 | 46 | 40 | 54 | 66 | 1300 | 24.70 | TDXBAL826 | |
| 32-8 | 45.00 | **89.00** | 31.50 | **63.00** | 200 | 700 | 68 | 80 | 38 | 54 | 50 | 68 | 80 | 1960 | 63.62 | TDXBAL832 | |

| Buizen-Transporthaak-CE<br>**Type TH0868** | Pipe-Transport hook -CE<br>**Type TH0868** | Pipe-Transport hook -CE<br>**Type TH0868** | Rohrtransporthaak -CE<br>**Type TH0868** |
|---|---|---|---|

| Nominale maat<br>Désignation<br>Nominal size<br>Nenngrösse | WLL<br>CMU<br>In pair<br>15°≤ β ≤ 45°<br>[t] | b<br>mm | a<br>mm | d1<br>mm | d2<br>mm | g<br>mm | h<br>mm | c<br>mm | Kg | Art.NR<br>Code Art.<br>Stock No.<br>Art.Nr. | € |
|---|---|---|---|---|---|---|---|---|---|---|---|
| 13-8 | 7.5 | 174 | 226 | 28 | 20 | 49 | 57 | 60 | 3.1 | TH086813 | |
| 22-8 | 21.2 | 274 | 345 | 44 | 30 | 80 | 90 | 95 | 14.6 | TH086822 | |

Gebruik altijd per paar | 15°≤ β ≤ 45°( β= Inclinatiehoek t.o.v. verticaal)
Utiliser toujours par paire | 15°≤ β ≤ 45°( β= angle d'inclinaison par rapport à la verticale)
Use always in pair | 15°≤ β ≤ 45°( β= Inclination angle to vertical)
Immer im Paar verwenden | 15°≤ β ≤ 45°( β= Neigungswinkel zur Vertikalen)

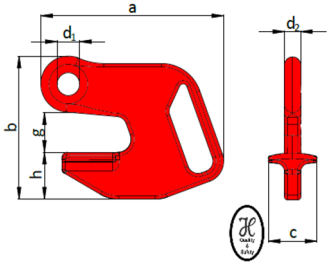

ISO- containerhaak. **Type DKA** | ISO- Anneau pour container **Type DKA** | ISO- containerhook **Type DKA** | ISO- containerhaak **Type DKA**

| Hijsrichting<br>Direction de levage<br>Lifting direction<br>Hebe-richtung | | WLL<br>CMU<br>[t] | K<br>mm | E<br>mm | F<br>mm | T<br>mm | G<br>mm | H<br>mm | Kg | Art.NR<br>Code Art.<br>Stock No.<br>Art.Nr. | € |
|---|---|---|---|---|---|---|---|---|---|---|---|
| Verticaal-Vertical<br>Vertical-Vertikal | **DKA-V** | 12.50 | 192 | 70 | 45 | 25 | 75 | 48 | 4.0 | 09050004 | |
| 45°<br>Links-à gauche<br>Left-Links | **DKA-L45** | 12.50 | 192 | 70 | 45 | 25 | 75 | 48 | 4.0 | 09050003 | |
| 45°<br>Rechts-à droite<br>Right-Rechts | **DKA-R45** | 12.50 | 192 | 70 | 45 | 25 | 75 | 48 | 4.0 | 09050005 | |

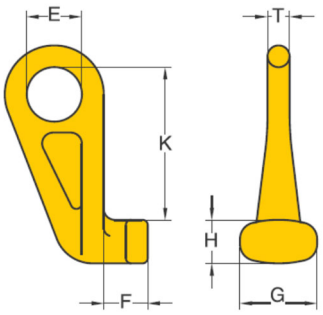




ISO-Containerhaak met vergrendeling **Type TCU** | Crochet ISO container avec bloccage **Type TCU** | ISO-Containerlug with locking device **Type TCU** | ISO-Container-Transport öse **Type TCU**

| Nominale maat<br>Désignation<br>Nominal size<br>Nenngrösse | WLL<br>CMU<br>[t]<br>set of 4pcs<br>. | A<br>mm | B<br>mm | C<br>mm | D<br>mm | E<br>mm | F<br>mm | G<br>mm | Kg | Art.NR<br>Code Art.<br>Stock No.<br>Art.Nr. | € |
|---|---|---|---|---|---|---|---|---|---|---|---|
| TCU32 | 32[t]-50° | 152 | 181 | 45 | 37 | 73 | 75 | 40 | 20 | 556927 | |
| TCU40 | 40[t]–36° | 152 | 181 | 45 | 37 | 73 | 75 | 40 | 20 | 556927 | |



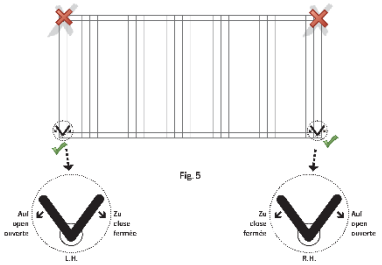


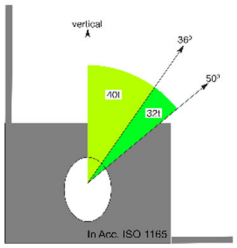


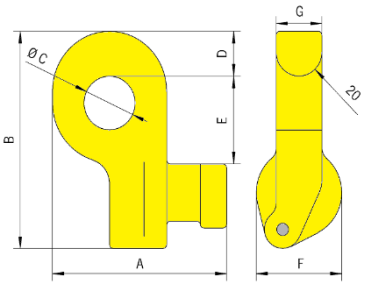


**Bottom Side Lifting**
**with set of 4 Lugs – 2x LH / 2x RH**
**Only for Corner Casting ISO 1161**

ISO-Containerhaak met vergrendeling **Type TCO** | Crochet ISO container avec bloccage **Type TCO** | ISO-Containerlug with locking device **Type TCO** | ISO Container-Transport öse **Type TCO**

| Nominale maat<br>Désignation<br>Nominal size<br>Nenngrösse | WLL<br>CMU<br>[t]<br>set/4pcs . | A<br>mm | B<br>mm | C<br>mm | D<br>mm | E<br>mm | F<br>mm | G<br>mm | Kg | Art.NR<br>Code Art.<br>Stock No.<br>Art.Nr. | € |
|---|---|---|---|---|---|---|---|---|---|---|---|
| TCO56 | 56[t]- 0° | 123 | 217 | 45 | 39 | 57 | 101 | 121 | 30 | 556965 | |



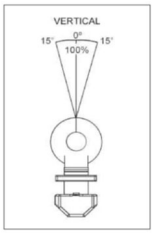


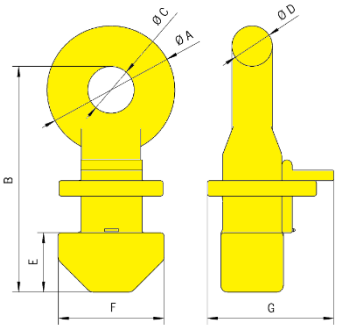


**Top Lifting with set of 4 Lugs**
**Only for Corner Casting ISO 1161**

| ISO-Containerhaak Universeel<br>Type T4L | Crochet ISO container Universel<br>Type T4L | ISO-Containerlug Universal<br>Type T4L | Container-Transport öse Universal<br>Type T4L |
|---|---|---|---|





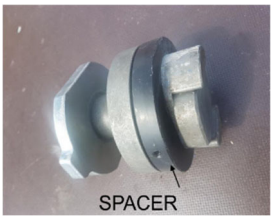





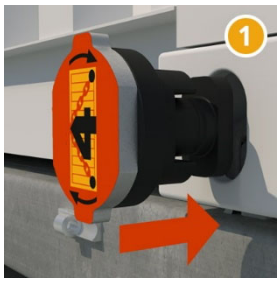





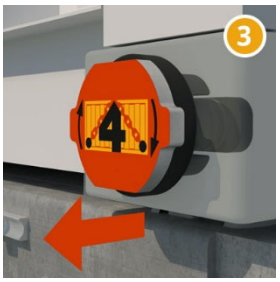





| Type | WLL<br>CMU<br>Each | WLL<br>CMU<br>Set of 4 Pcs | | Lifting configuration | Art.NR<br>Code Art.<br>Stock No.<br>Art.Nr. | € |
|---|---|---|---|---|---|---|
| T4L10 | 10[t] | 40[t] | | Bottom Side Lifting in set of 4 Lugs - (Incl. Storage Rack) | T4L10 | |
| T4L14 | 14[t] | 56[t] | | Bottom Side Lifting in set of 4 Lugs - (Incl. Storage Rack) | T4L14 | |
| T4L10SP15 | | | | Spacer for T4L10 – 15mm | T4L10SP15 | |

Only suitable for Corner Casting ISO 1161 /

| C-HAAK | C-CROCHET | C-HOOK | C-HAAK |
|---|---|---|---|

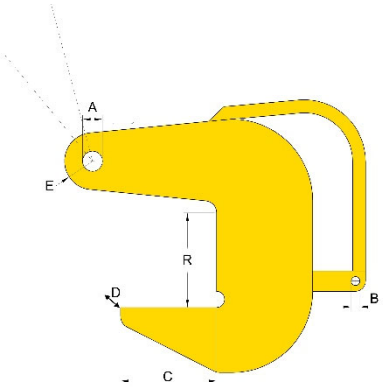


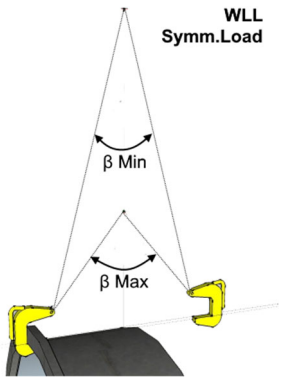


| Type | R<br>mm | WLL<br>CMU<br>[t]<br>In pair | β Min | β Max | A<br>mm | B<br>mm | C<br>mm | D<br>mm | E<br>mm | | Art.NR<br>Code Art.<br>Stock No.<br>Art.Nr. | € |
|---|---|---|---|---|---|---|---|---|---|---|---|---|
| 08T135 | 135 | 8 [t] | 30° | 80° | 37 | 11 | 120 | (1) | R35 | | CH08T135 | |
| 14T116 | 116 | 14 [t] | 30° | 80° | 37 | 11 | 120 | 35 | R35 | | CH14T116 | |
| 16T135 | 135 | 16.5 [t] | 30° | 80° | 43 | 11 | 120 | 40 | R42 | | CH16T135 | |

(1) Minor Technical changes reserved – To be determined on the Approval Drawing after Order

## Verbindingsschalm / Maillon de jonction / Coupling link / Verbindungsglied
**Type VGY**

| Nominale maat Désignation Nominal size Nenngrösse | WLL CMU [t] | K mm | A mm | D mm | B mm | Kg | Art.NR Code Art. Stock No. Art.Nr. | € |
|---|---|---|---|---|---|---|---|---|
| 6-8 | 1.12 | 44 | 15 | 7 | 17 | 0.1 | 09051006 | |
| 7/8-8 | 2.00 | 57 | 18 | 9 | 22 | 0.2 | 09051007 | |
| 10-8 | 3.15 | 68 | 25 | 11 | 26 | 0.3 | 09051010 | |
| 13-8 | 5.30 | 91 | 30 | 16 | 35 | 0.7 | 09051013 | |
| 16-8 | 8.00 | 100 | 36 | 19 | 38 | 1.1 | 09051016 | |
| 18/20-8 | 12.50 | 122 | 42 | 22 | 46 | 1.9 | 09051019 | |
| 22-8 | 15.00 | 152 | 49 | 24 | 59 | 3.0 | 09051022 | |
| 26-8 | 21.20 | 162 | 55 | 30 | 62 | 5.0 | 09051026 | |
| 32-8 | 31.50 | 202 | 69 | 36 | 79 | 9.0 | 09051032 | |

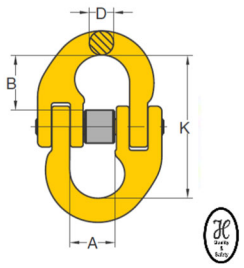


## Veiligheidshaak met oog / Crochet de securité à oeil / Safety eye hook / Sicherheitslasthaak
**Type YC**

| Nominale maat Désignation Nominal size Nenngrösse | WLL CMU [t] | K mm | P mm | A mm | D mm | T mm | H mm | Kg | Art.NR Code Art. Stock No. Art.Nr. | € |
|---|---|---|---|---|---|---|---|---|---|---|
| 6-8 | 1.12 | 110 | 29 | 21 | 10 | 15 | 19 | 0.5 | 09080206 | |
| 7/8-8 | 2.00 | 136 | 34 | 25 | 11 | 20 | 24 | 0.8 | 09080208 | |
| 10-8 | 3.15 | 167 | 44 | 32 | 13 | 26 | 30 | 1.4 | 09080210 | |
| 13-8 | 5.30 | 207 | 52 | 40 | 16 | 30 | 39 | 2.7 | 09080213 | |
| 16-8 | 8.00 | 252 | 60 | 52 | 21 | 36 | 49 | 5.6 | 09080216 | |
| 18/20-8 | 12.50 | 282 | 90 | 64 | 23 | 48 | 62 | 8.5 | 09080219 | |
| 22-8 | 15.00 | 319 | 80 | 70 | 24 | 49 | 63 | 11.2 | 09080222 | |
| 26-8 | 21.20 | 343 | 99 | 80 | 25 | 56 | 69 | 14.5 | 09080226 | |

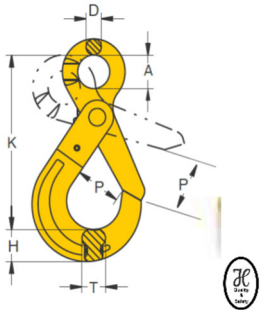


## Veiligheidshaak met gaffel / Crochet de securité à chape / Safety clevis hook / Sicherheitslasthaak
**Type YD**

| Nominale maat Désignation Nominal size Nenngrösse | WLL CMU [t] | K mm | A mm | P mm | T mm | H mm | Kg | Art.NR Code Art. Stock No. Art.Nr. | € |
|---|---|---|---|---|---|---|---|---|---|
| 6-8 | 1.12 | 100 | 6 | 29 | 15 | 19 | 0.5 | 09080306 | |
| 7/8-8 | 2.00 | 119 | 9 | 34 | 20 | 24 | 0.8 | 09080308 | |
| 10-8 | 3.15 | 143 | 11 | 44 | 26 | 30 | 1.4 | 09080310 | |
| 13-8 | 5.30 | 179 | 14 | 52 | 30 | 39 | 2.9 | 09080313 | |
| 16-8 | 8.00 | 212 | 18 | 60 | 36 | 49 | 5.6 | 09080316 | |
| 18/20-8 | 12.50 | 243 | 21 | 90 | 48 | 62 | 9.0 | 09080319 | |
| 22-8 | 15.00 | 273 | 24 | 80 | 49 | 63 | 13.0 | 09080322 | |

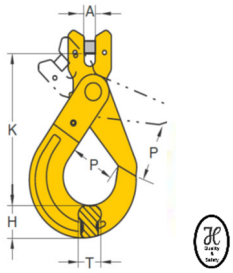


## Veiligheidshaak met wartel / Crochet de securité à émerillon / Safety swivel hook / Sicherheitslasthaak mit wirbel
**Type YSW / YSWN**

| Nominale maat Désignation Nominal size Nenngrösse | WLL CMU [t] | K mm | P mm | B mm | A mm | D mm | T mm | H mm | Kg | **Type YSW** Messing glijlager Rondelle Brass bushing Messinggleitlager **360°Only positioning** Art.NR Code Art. Stock No. Art.Nr. | € | **Type YSWN** Kogellager - Roulement à billes Ball bearing Kügellager **360° Rotation under load** Art.NR Code Art. Stock No. Art.Nr. | € |
|---|---|---|---|---|---|---|---|---|---|---|---|---|---|
| 6-8 | 1.12 | 149 | 28 | 23 | 32 | 12 | 15 | 19 | 0.7 | 09080606 | | 09059806 | |
| 7/8-8 | 2.00 | 186 | 34 | 29 | 36 | 14 | 20 | 24 | 1.2 | 09080608 | | 09059807 | |
| 10-8 | 3.15 | 218 | 44 | 34 | 41 | 16 | 26 | 30 | 2.0 | 09080610 | | 09059810 | |
| 13-8 | 5.30 | 276 | 51 | 44 | 46 | 22 | 30 | 39 | 4.2 | 09080613 | | 09059813 | |
| 16-8 | 8.00 | 329 | 61 | 51 | 61 | 24 | 36 | 49 | 7.3 | 09080616 | | 09059816 | |
| 18/20-8 | 12.50 | 403 | 91 | 82 | 74 | 26 | 48 | 62 | 9.4 | 09080620 | | 09059820 | |
| 22-8 | 15.00 | 457 | 80 | 96 | 97 | 33 | 49 | 63 | 18.0 | 09080622 | | 09059822 | |
| 26-8 | 21.20 | 535 | 99 | 116 | 123 | 26 | 56 | 69 | 32.0 | 09080626 | | 09059826 | |

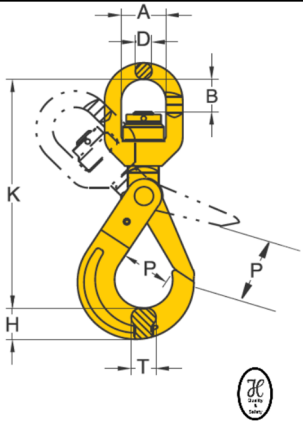

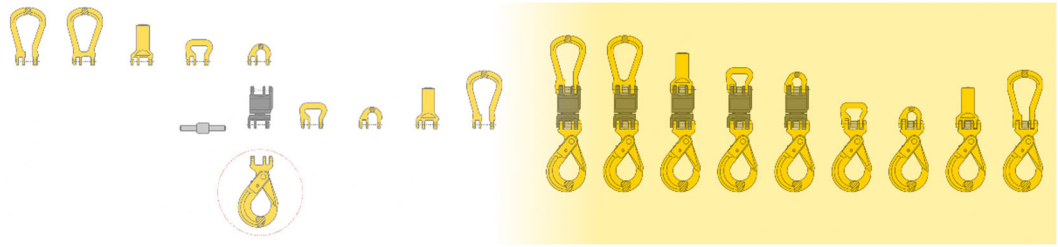

Topschalm DIN5688-8 - open. **Type EC** | Anneau simples DIN5688-8 - ouvert **Type EC** | Master link DIN5688-8 -open **Type EC** | Aufhängeglied DIN5688-8 – offen **Type EC**

| Nominale maat Désignation Nominal size Nenngrösse | WLL CMU [t] | K mm | W mm | T mm | H mm | A mm | Kg | Art.NR Code Art. Stock No. Art.Nr. | € |
|---|---|---|---|---|---|---|---|---|---|
| 7-8 | 2.00 | 100 | 50 | 15 | 15 | 15 | 0.3 | 09805108 | |
| 10 | 3.15 | 127 | 66 | 19 | 19 | 20 | 0.6 | 09805110 | |
| 13 | 5.30 | 145 | 72 | 23 | 22 | 25 | 1.0 | 09805113 | |
| 16 | 8.00 | 174 | 80 | 25 | 26 | 30 | 1.6 | 09805116 | |
| 18-20 | 12.50 | 202 | 104 | 31 | 36 | 36 | 2.6 | 09805119 | |

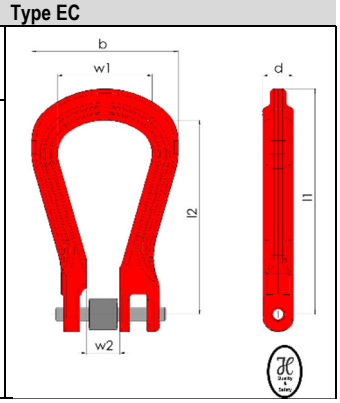


Verbindingsschalm **Type BST** | Maillon de jonction **Type BST** | Coupling link **Type BST** | Verbindungsglied **Type BST**

| Nominale maat Désignation Nominal size Nenngrösse | WLL CMU [t] | L mm | A mm | D mm | K mm | Kg | Art.NR Code Art. Stock No. Art.Nr. | € |
|---|---|---|---|---|---|---|---|---|
| 6-8 | 1.12 | 22 | 15 | 7 | 17 | 0.1 | 09805406 | |
| 7/8-8 | 2.00 | 28 | 18 | 9 | 22 | 0.1 | 09805407 | |
| 10-8 | 3.15 | 34 | 25 | 11 | 26 | 0.2 | 09805410 | |
| 13-8 | 5.30 | 44 | 30 | 16 | 35 | 0.4 | 09805413 | |
| 16-8 | 8.00 | 52 | 36 | 19 | 38 | 0.6 | 09805416 | |
| 18/20-8 | 12.50 | 63 | 42 | 22 | 46 | 1.1 | 09805419 | |
| 22-8 | 15.00 | 76 | 49 | 24 | 59 | 1.7 | 09805422 | |
| 26-8 | 21.20 | 80 | 55 | 30 | 62 | 2.7 | 09805426 | |
| 32-8 | 31.50 | 100 | 69 | 36 | 79 | 5.0 | 09805432 | |

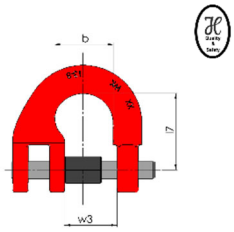


Topschalm DIN5688-8 - gesloten. **Type ECO** | Anneau simples DIN5688-8 - fermé **Type ECO** | Master link DIN5688-8 –closed **Type ECO** | Aufhängeglied DIN5688-8 – geschlos. **Type ECO**

| Nominale maat Désignation Nominal size Nenngrösse | WLL CMU [t] | K mm | W mm | T mm | H mm | L mm | Kg | Art.NR Code Art. Stock No. Art.Nr. | € |
|---|---|---|---|---|---|---|---|---|---|
| 7-8 | 2.00 | 100 | 50 | 15 | 15 | 78 | 0.3 | 09805208 | |
| 10 | 3.15 | 127 | 65 | 19 | 19 | 101 | 0.6 | 09805210 | |
| 13 | 5.30 | 145 | 72 | 23 | 22 | 113 | 1.1 | 09805213 | |
| 16 | 8.00 | 174 | 80 | 25 | 26 | 137 | 1.7 | 09805216 | |
| 18-20 | 12.50 | 202 | 104 | 31 | 36 | 165 | 2.8 | 09805219 | |

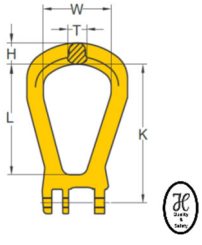


Textiel-verbindingsschalm **Type YW** | Textile-Maillon de jonction **Type YW** | Textile-Coupling link **Type YW** | Textil-Verbindungsglied **Type YW**

| Nominale maat Désignation Nominal size Nenngrösse | WLL CMU [t]g | K mm | W mm | A mm | B mm | Kg | Art.NR Code Art. Stock No. Art.Nr. | € |
|---|---|---|---|---|---|---|---|---|
| 6-8 | 1.12 | 33 | 38 | 15 | 22 | 0.2 | 09150906 | |
| 7/8-8 | 2.00 | 33 | 40 | 18 | 24 | 0.2 | 09150907 | |
| 10-8 | 3.15 | 42 | 47 | 25 | 29 | 0.4 | 09150910 | |
| 13-8 | 5.30 | 51 | 53 | 30 | 35 | 0.7 | 09150913 | |
| 16-8 | 8.00 | 63 | 67 | 36 | 44 | 1.3 | 09150916 | |
| 18/20-8 | 12.50 | 71 | 80 | 42 | 52 | 2.1 | 09150919 | |
| 22-8 | 15.00 | 112 | 125 | 50 | 72 | 5.7 | 09150922 | |
| 26-8 | 21.20 | 130 | 150 | 58 | 84 | 9.0 | 09150926 | |
| 32-8 | 31.50 | 165 | 190 | 69 | 85 | 14.0 | 09150932 | |

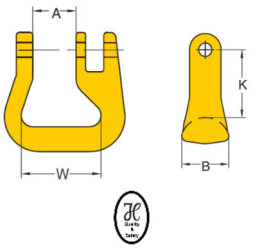

| Wartel met kogellager – geïsoleerd **Type BSI** | | Emerillon à billes – isolé **Type BSI** | | Ball bearing swivel –insulated **Type BSI** | | Kugellagerwirbel isoliert **Typ BSI** | |
|---|---|---|---|---|---|---|---|
| Nominale maat Désignation Nominal size Nenngrösse | WLL CMU [t] | D mm | L mm | Kg | Art.NR Code Art. Stock No. Art.Nr. | € | 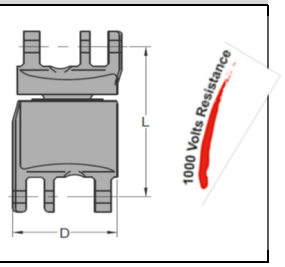 |
| 7-8 | 2.00 | 50 | 75 | 0.6 | 09805508 | | |
| 10 | 3.15 | 62 | 94 | 1.2 | 09805510 | | |
| 13 | 5.30 | 77 | 123 | 2.4 | 09805513 | | |
| 16 | 8.00 | 94 | 143 | 4.2 | 09805516 | | |
| 18-20 | 12.50 | 109 | 164 | 6.7 | 09805519 | | |

| Verbingsschalm-as **Type Y50** | | Maillon de jonction-axe **Type Y50** | | Shank Coupling **Type Y50** | | Schaftkupplung **Typ Y50** | |
|---|---|---|---|---|---|---|---|
| Nominale maat Désignation Nominal size Nenngrösse | WLL CMU [t] | D mm | d min. mm | L1 mm | L2 mm | Kg | Art.NR Code Art. Stock No. Art.Nr. | € | 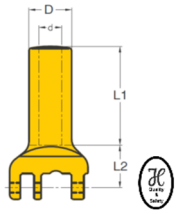 |
| 7/8-8 | 2.00 | 30 | 13 | 69 | 30 | 0.5 | DXY805007 | | |
| 10-8 | 3.15 | 35 | 16 | 70 | 32 | 0.7 | DXY805010 | | |
| 13-8 | 5.30 | 42 | 20 | 105 | 39 | 1.6 | DXY805013 | | |
| 16-8 | 8.00 | 50 | 25 | 120 | 46 | 2.6 | DXY805016 | | |
| 18/20-8 | 12.50 | 75 | 30 | 90 | 59 | 5.6 | DXY805020 | | |

| As & Huls. **Type PS** | | Axes & Bagues **Type PS** | | Bolt & Bush **Type PS** | | Bolzen & Hulze **Type PS** | |
|---|---|---|---|---|---|---|---|
| Nominale maat Désignation Nominal size Nenngrösse | WLL CMU [t] | W mm | D mm | L mm | D mm | Kg | Art.NR Code Art. Stock No. Art.Nr. | € |  |
| 6-8 | 1.12 | 9 | 11 | 44 | 5 | 0.01 | 09829906 | | |
| 7/8-8 | 2.00 | 12 | 13 | 50 | 6 | 0.02 | 09829907 | | |
| 10-8 | 3.15 | 18 | 16 | 67 | 8 | 0.04 | 09829910 | | |
| 13-8 | 5.30 | 21 | 18 | 82 | 10 | 0.07 | 09829913 | | |
| 16-8 | 8.00 | 25 | 24 | 105 | 12 | 0.15 | 09829916 | | |
| 18/20-8 | 12.50 | 29 | 30 | 116 | 15 | 0.26 | 09829919 | | |
| 22-8 | 15.00 | 34 | 33 | 137 | 17 | 0.4 | 09829922 | | |
| 26-8 | 21.20 | 37 | 38 | 166 | 20 | 0.62 | 09829926 | | |
| 32-8 | 31.50 | 45 | 45 | 204 | 24 | 1.04 | 09829932 | | |

| Veiligheidshaak **Type YL** | | Crochet de securité **Type YL** | | Safety hook **Type YL** | | Sicherheitslasthaak **Type YL** | |
|---|---|---|---|---|---|---|---|
| Nominale maat Désignation Nominal size Nenngrösse | WLL CMU [t] | K mm | P mm | T mm | H mm | Kg | Art.NR Code Art. Stock No. Art.Nr. | € | 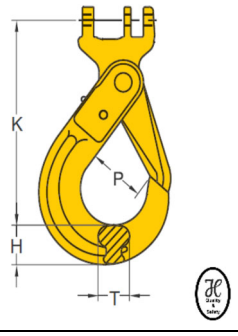 |
| 6-8 | 1.12 | 105 | 29 | 15 | 19 | 0.6 | 09820506 | | |
| 7/8-8 | 2.00 | 136 | 34 | 20 | 24 | 0.9 | 09820508 | | |
| 10-8 | 3.15 | 154 | 44 | 26 | 30 | 1.8 | 09820510 | | |
| 13-8 | 5.30 | 202 | 55 | 30 | 39 | 3.0 | 09820513 | | |
| 16-8 | 8.00 | 242 | 60 | 36 | 49 | 6.0 | 09820516 | | |
| 18/20-8 | 12.50 | 257 | 90 | 48 | 62 | 8.8 | 09820520 | | |
| 22-8 | 15.00 | 304 | 80 | 49 | 63 | 11.3 | 09820522 | | |
| 26-8 | 21.20 | 329 | 99 | 56 | 69 | 14.2 | 09820526 | | |

| Lasthaak met veiligheidsklep **Type Y55** | | Crochet avec linguet secur. **Type Y55** | | | | Hook with safety latch **Type Y55** | | Sicherheitslasthaak **Typ Y55** | |
|---|---|---|---|---|---|---|---|---|---|
| Nominale maat Désignation Nominal size Nenngrösse | WLL CMU [t] | H mm | K mm | P mm | T mm | Kg | Art.NR Code Art. Stock No. Art.Nr. | € | 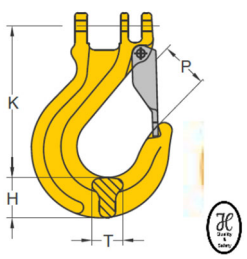 |
| 7/8-8 | 1.12 | 23 | 93 | 30 | 19 | 0.4 | DXY805507 | | |
| 10-8 | 2.00 | 31 | 115 | 36 | 23 | 0.9 | DXY805510 | | |
| 13-8 | 3.15 | 36 | 141 | 42 | 28 | 1.8 | DXY805513 | | |
| 16-8 | 5.30 | 45 | 166 | 47 | 32 | 3.0 | DXY805516 | | |
| 20-8 | 8.00 | 48 | 191 | 52 | 43 | 4.7 | DXY805519 | | |

## Textiel-verbindingsschalm / Textile-Maillon de jonction / Textile-Coupling link / Textil-Verbindungsglied
**Type WSC**

| Nominale maat Désignation Nominal size Nenngrösse | WLL CMU [t] | A mm | B mm | D mm | K mm | W mm | Kg | Art.NR Code Art. Stock No. Art.Nr. | € |
|---|---|---|---|---|---|---|---|---|---|
| 6-8 | 1.12 | 15 | 17 | 7 | 55 | 38 | 0.2 | 09151006 | |
| 7/8-8 | 2.00 | 18 | 22 | 9 | 62 | 40 | 0.3 | 09151007 | |
| 10-8 | 3.15 | 25 | 26 | 11 | 78 | 47 | 0.6 | 09151010 | |
| 13-8 | 530 | 30 | 35 | 16 | 95 | 53 | 1.1 | 09151013 | |
| 16-8 | 8.00 | 36 | 38 | 19 | 115 | 67 | 1.9 | 09151016 | |
| 18/20-8 | 12.50 | 42 | 46 | 22 | 132 | 80 | 3.2 | 09151019 | |
| 22-8 | 15.00 | 49 | 59 | 24 | 187 | 125 | 7.5 | 09151022 | |
| 26-8 | 21.20 | 55 | 62 | 30 | 209 | 150 | 12.0 | 09151026 | |
| 32-8 | 31.50 | 69 | 79 | 36 | 279 | 190 | 19.0 | 09151032 | |

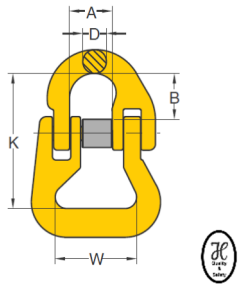


## Lasthaak voor hijsband / Crochet pour sangles de levage / Hook for lifting slings / Sicherheitslasthaak fur hebebänder
**Type FN**

| Nominale maat Désignation Nominal size Nenngrösse | WLL CMU [t] | K mm | P mm | W mm | T mm | H mm | Kg | Art.NR Code Art. Stock No. Art.Nr. | € |
|---|---|---|---|---|---|---|---|---|---|
| 1 | 1.00 | 79 | 28 | 45 | 22 | 26 | 0.8 | 09820610 | |
| 2 | 2.00 | 87 | 34 | 71 | 25 | 35 | 1.6 | 09820620 | |
| 3 | 3.00 | 96 | 37 | 104 | 29 | 38 | 2.4 | 09820630 | |
| 5 | 5.00 | 154 | 40 | 185 | 40 | 50 | 7.3 | 09820650 | |

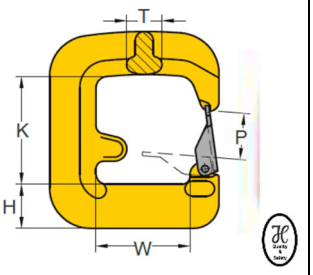


## Kabelblok klapbaar / Moufle ouvrant / Snatch Block / Blöck mit Schäkel
**Type SBY501**

| Nominale maat Désignation Nominal size Nenngrösse | WLL CMU [t] | Specs. | Ø WR mm | Ø Sheave Inch | Art.NR Code Art. Stock No. Art.Nr. | € |
|---|---|---|---|---|---|---|
| 02 | 2.00 | ✓ Bronze bushing<br>✓ Closed sheaves –<br>✓ drop forged steel<br>✓ Groove bottom hardened 35 Rc<br>✓ Replacement sheaves available<br>✓ Safety factor 4:1 | 8-10 | 3.0 | DXY850102 | |
| 04 | 4.00 | | 10-13 | 4.5 | DXY850104 | |
| 08 | 8.00 | | 16-19 | 6.0 | DXY850108 | |




## Wisselstukken. / Pieces de rechange / Spare parts / Ersatzteilen

| Nominale maat Désignation Nominal size Nenngrösse |  YL-YC-YD-YSW(N) | |  Y55 | |  YD | |  VGY-WSC | | |
|---|---|---|---|---|---|---|---|---|---|
| | Art.NR Code Art. Stock No. Art.Nr. | € | Art.NR Code Art. Stock No. Art.Nr. | € | Art.NR Code Art. Stock No. Art.Nr. | € | Nominale maat Désignation Nominal size Nenngrösse | Art.NR Code Art. Stock No. Art.Nr. | € |
| 6-8 | 09829806 | | 09829606 | | 09829706 | | | DX8P01506 | |
| 7/8-8 | 09829808 | | 09829608 | | 09829708 | | | DX8P01507 | |
| 10-8 | 09829810 | | 09829610 | | 09829710 | | | DX8P01510 | |
| 13-8 | 09829813 | | 09829613 | | 09829713 | | | DX8P01513 | |
| 16-8 | 09829816 | | 09829616 | | 09829716 | | | DX8P01516 | |
| 20-8 | 09829820 | | 09829620 | | 09829720 | | | DX8P01520 | |
| 22-8 | 09829822 | | | | | | | DX8P01522 | |
| 26-8 | 09829826 | | | | | | | DX8P01526 | |
| 32-8 | | | | | | | | DX8P01532 | |

## Sorteer/Pijpleidinghaak-CE | Sorting-Pipe-line crochet-CE | Sorting-Pipe line hook-CE | Sorting-Pipeline haken-CE

| WLL On **Bottom** Zone [t] | WLL On **Tip** Zone [t] | A mm | B mm | C mm | D mm | E mm | G mm | Kg | Art.NR Code Art. Stock No. Art.Nr. | € |
|---|---|---|---|---|---|---|---|---|---|---|
| 7.5 | 2.00 | 38 | 34 | 31 | 19 | 195 | 70 | 3.2 | 3100000 | |

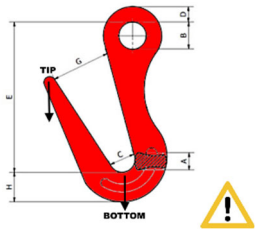


## Kogelkophaak-CE | Lifting Clutch -CE | Lifting Clutch -CE | Kugelkopfhaak -CE

| WLL [t] | | A mm | B mm | C mm | D mm | E mm | F mm | G mm | H mm | I mm | Kg | Art.NR Code Art. Stock No. Art.Nr. | € |
|---|---|---|---|---|---|---|---|---|---|---|---|---|---|
| 1.0 | 1.3 | 34 | 81 | 71 | 45 | 73 | 73 | 12 | 13 | 21 | 0.9 | D101YE013 | |
| 1.5 | 2.5 | 42 | 99 | 85 | 57 | 88 | 88 | 16 | 14 | 27 | 1.3 | D101YE025 | |
| 3.0 | 5.0 | 55 | 133 | 88 | 69 | 110 | 110 | 22 | 18 | 35 | 3.3 | D101YE050 | |
| 6.0 | 10.0 | 74 | 176 | 116 | 83 | 161 | 161 | 30 | 27 | 51 | 10.0 | D101YE100 | |
| 12.0 | 20.0 | 110 | 228 | 134 | 108 | 182 | 182 | 42 | 31 | 77 | 20.4 | D101YE200 | |
| 32.0 | | 154 | 307 | 189 | 164 | 272 | 272 | 52 | 40 | 102 | 46.5 | D100YE320 | |

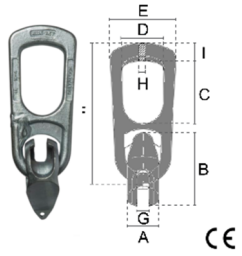


## Ringkoppeling-CE | Ring coupling -CE | Coupleur à anneau -CE | Ringkupplung -CE

| WLL [t] | | A mm | B mm | C mm | D mm | E mm | F mm | G mm | H mm | I mm | J mm | K mm | L mm | Kg | Art.NR Code Art. Stock No. Art.Nr. | € |
|---|---|---|---|---|---|---|---|---|---|---|---|---|---|---|---|---|
| 0.7 | 2.5 | 95 | 70 | 59 | 27 | 35 | 30 | 12 | 58 | 79 | 13 | 12 | 264 | 1.6 | D100YE025 | |
| 3.0 | 5.0 | 117 | 85 | 66 | 37 | 45 | 42 | 17 | 82 | 107 | 17 | 18 | 333 | 3.6 | D100YE050 | |
| 5.3 | 10.0 | 148 | 110 | 85 | 50 | 56 | 52 | 25 | 110 | 148 | 23 | 22 | 424 | 9.0 | D100YE100 | |

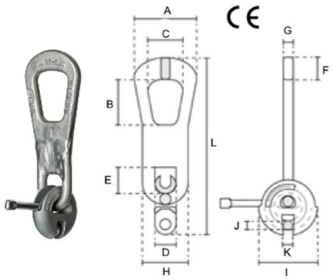


## Haak voor betonwapeningsnetten-CE | Crochets pour treillis - béton armé -CE | Hook for concrete rebar netting -CE | Baustahlmattenhaak-CE

**Type PBA**

| Nominale maat Désignation Nominal size Nenngrösse | WLL [t] | e mm | d1 mm | g mm | a mm | d2 mm | Kg | Art.NR Code Art. Stock No. Art.Nr. | € |
|---|---|---|---|---|---|---|---|---|---|
| 6-8 | 1.12 | 160 | 16 | 40 | 24 | 7 | 0.36 | PBA22019 | |
| 8-8 | 2.00 | 200 | 19 | 50 | 30 | 10 | 0.72 | PBA22020 | |
| 10-8 | 3.15 | 260 | 27 | 65 | 39 | 13 | 1.78 | PBA22021 | |

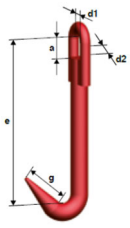


## SET-Haken voor betonwapeningsnetten met borgveer (SET=4 st) - CE | SET- Crochets pour treillis-béton armé avec ressor sécurité anti-décrochage- (Set=4 Pcs) - CE | SET- Hooks for concrete rebar netting with Lock-spring (SET=4 Pcs) - CE | SET- Baustahlmattenhaak mit sicherungsfeder- (SET=4 st) - CE

**Type ILCRT**

| WLL / HOOK | | Art.NR Code Art. Stock No. Art.Nr. | € |
|---|---|---|---|
| 90° | | | |
| 1.2[t] | | ILCRTR4X | |
| WLL / SET | | | |
| β | | | |
| B= 45° [t] | | | |
| 3.0 [t] | | | |

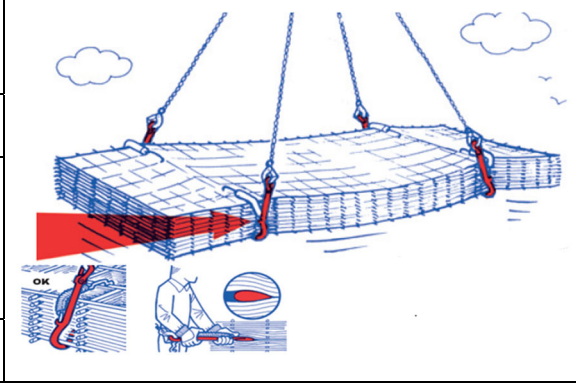




# CARTEC

INOX-COMPONENTEN VOOR HIJSKETTINGEN
STAINLESS STEEL FITTINGS **FOR LIFTING**
ACCESSOIRES **DE LEVAGE** EN INOX
ZUBEHÖRE AUS ROSTFREIEM STAHL **FÜR ANSCHLAGKETTEN**

CARTEC INOX




HIJSTECHNIEK LIFTING TECHNICS
DECORLUX
TECHNIQUE DE LEVAGE HEBETECHNIK

| MAXIMUM WERKBELASTING<br>Symmetrische belasting<br>Volgens. EN 818-2<br>&<br>Gebruiksaanwijzing<br>**WLL [t]** | CHARGE MAX. D'UTILISATION<br>levage symmétrique<br>Suivant EN 818-2<br>&<br>Mode d'emploi<br>**CMU [t]** | WORKING LOAD LIMITS<br>to a balanced load<br>Acc. EN 818-2<br>&<br>Safety instructions<br>**WLL [t]** | TRAGFAHIGKEIT<br>Symm. Belastung<br>Acc. EN 818-2<br>&<br>Gebrauchsanleitung<br>**WLL [t]** |
|---|---|---|---|

**GRADE 60 INOX**

| | 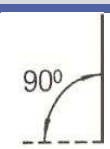 | 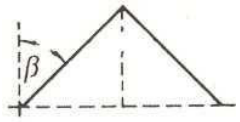 | | 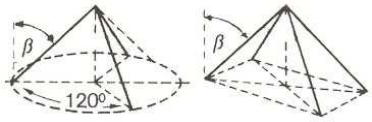 | |
|---|---|---|---|---|---|
| | Kettingleng<br>1-brin<br>1-leg<br>1-strang | 2-sprong<br>2-brins<br>2-legs<br>2-strang | | 3- en 4 sprong<br>3-et 4 brins<br>3- and 4 legs<br>3- und 4 strang | |
| **Spreidingshoek<br>Angle d'inclinaison<br>Inclination angle<br>Neigungswinkel** | **β = 0°** | **β = 0°- 45°** | **β = 45°- 60°** | **β = 0°- 45°** | **β = 45°- 60°** |
| **Ø<br>Ketting - Chain<br>Chaine Kette** | **Belastingsfaktor - Facteur de charge - Load factor - Lastfaktor<br>(Bf)** | | | | |
| **mm** / inch | 1 | 1.4 | 1 | 2.1 | 1.5 |
| 6 / 1/4 | **0.90** | **1.25** | **0.90** | **1.89** | **1.35** |
| 7 / 9/32 | **1.25** | **1.75** | **1.25** | **2.60** | **1.85** |
| 8 / 5/16 | **1.60** | **2.20** | **1.60** | **3.35** | **2.40** |
| 10 / 3/8 | **2.50** | **3.50** | **2.50** | **5.25** | **3.75** |
| 13 / 1/2 | **4.25** | **5.95** | **4.25** | **8.90** | **6.35** |
| 16 / 5/8 | **6.30** | **8.80** | **6.30** | **13.20** | **9.40** |

**Belastingsfactoren - Facteurs des charges - Load factors – Lastfaktoren<br>(Bf)**

| POS 1 | POS 2 | | POS 3 | POS 4 | | POS 5 | | POS 6 | |
|---|---|---|---|---|---|---|---|---|---|
|  | 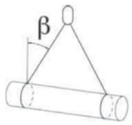 | | 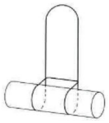 | 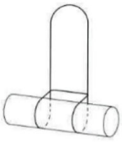 | 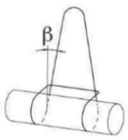 | 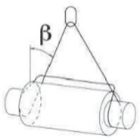 | | 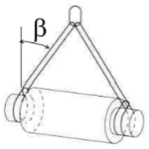 | |
| β=0° | 0°<β≤45° | 45°<β≤60° | | β=0° | 0°<β≤25° | 0°<β≤45° | 45°<β≤60° | 0°<β≤45° | 45°<β≤60° |
| Bf: 0.8 | Bf: 1.12 | Bf: 0.8 | Bf: 1.6 | Bf: 1.6 | Bf: 1.45 | Bf: 1.13 | Bf: 0.8 | Bf: 1.7 | Bf: 1.2 |

**Reductiefactoren - Facteurs des Reduction - Reduction factors – Reduktionstfaktoren<br>(Rf)**

| | | | | |
|---|---|---|---|---|
| EDGE LOADING | 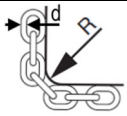 | R > 2x d | R > d | R < d |
| | | Rf: 1 | Rf: 0.7 | Rf: 0.5 |
| SHOCK LOADING |  | Light impact | Medium impact | Strong impact |
| | | Rf: 1 | Rf: 0.7 | |
|  |  | -40°C ⇔ 350°C | | > 350°C |
| | | Rf: 1 | | |

## C6XCM

**TOPSCHALM 1-2 SPRONG- INOX GRADE 60**
STAINLESS STEEL OBLONG MASTERLINK GR60
MAILLE DE TÊTE OVALE IN ACIER INOX GR60
OVAL AUFHÄNGERINGE AUS ROSTFREIEM STAHL GK 6

NEW



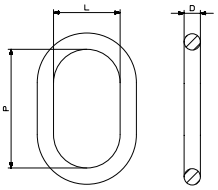


| Ketting Chain Chaîne Kette ⊥ Ø mm | Ketting Chain Chaîne Kette ∧ Ø mm | Code Code Code Code | Afmetingen Size Dimension Maß D mm | P mm | L mm | Gewicht Weight Poids Gewicht Kg | W.L.L. Kg |
|---|---|---|---|---|---|---|---|
| 6 / 7 | 6 | C6XCM0706 | 13 | 110 | 60 | 0,340 | 1.600 |
| 8 | --- | C6XCM08 | 13 | 110 | 60 | 0,340 | 1.600 |
| 10 | 7-8 | C6XCM1008 | 16 | 110 | 60 | 0,530 | 2.600 |
| 13 | 10 | C6XCM1310 | 18 | 135 | 75 | 0,800 | 4.250 |
| 16 | 13 | C6XCM1613 | 22 | 160 | 90 | 1,500 | 6.300 |
| 18 | 16 | C6XCM1816 | 26 | 180 | 100 | 2,300 | 8.900 |

## C6XCMC

**TOPSCHALM 3-4 SPRONG - INOX GRADE 60**
STAINLESS STEEL SUB-ASSEMBLY GR60
MAILLON DE TÊTE TRIPLE IN ACIER INOX GR60
AUFHÄNGEKÖPFE AUS ROSTFREIEM STAHL GK 6

NEW



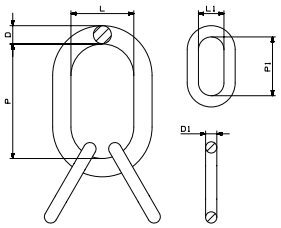


| Ketting Chain Chaîne Kette ⩚ Ø mm | Code Code Code Code | Afmetingen Size Dimension Maß D mm | P mm | L mm | D1 mm | P1 mm | L1 mm | Gewicht Weight Poids Gewicht Kg | W.L.L. Kg |
|---|---|---|---|---|---|---|---|---|---|
| 6 | C6XCMC06 | 13 | 110 | 60 | 10 | 44 | 20 | 0,520 | 1.700 |
| 7 | C6XCMC07 | 16 | 110 | 60 | 13 | 54 | 25 | 0,970 | 2.600 |
| 8 | C6XCMC08 | 18 | 135 | 75 | 16 | 70 | 34 | 1,600 | 3.350 |
| 10 | C6XCMC10 | 22 | 160 | 90 | 18 | 85 | 40 | 2,760 | 5.250 |
| 13 | C6XCMC13 | 26 | 180 | 100 | 22 | 115 | 50 | 4,450 | 8.900 |
| 16 | C6XCMC16 | 32 | 200 | 110 | 26 | 140 | 65 | 7,550 | 13.200 |

## C6XCL

**VERBINDINGSSCHALM - INOX GRADE 60**
STAINLESS STEEL CONNECTING LINK GR60
MAILLON DE JONCTION IN ACIER INOX GR60
VERBINDUNGSGLIED AUS ROSTFREIEM STAHL GK 6

NEW



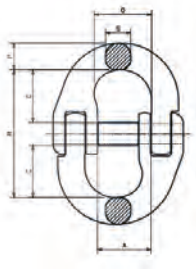

| Ketting Chain Chaîne Kette mm | Ketting Chain Chaîne Kette inch | Code Code Code Code | A mm | C mm | O mm | R mm | P mm | S mm | Gewicht Weight Poids Gewicht Kg | W.L.L. Kg |
|---|---|---|---|---|---|---|---|---|---|---|
| 6 | 1 / 4 | C6XCL06 | 14 | 18 | 18 | 45 | 8 | 7,5 | 0,080 | 900 |
| 7 | 9 / 32 | C6XCL07 | 18 | 20 | 20,5 | 50,5 | 10,2 | 9 | 0,140 | 1250 |
| 8 | 5 / 16 | C6XCL08 | 19 | 25,5 | 23,5 | 62 | 11,5 | 10 | 0,200 | 1600 |
| 10 | 3 / 8 | C6XCL10 | 24 | 30 | 27,5 | 72 | 12,6 | 12,6 | 0,350 | 2500 |
| 13 | 1 / 2 | C6XCL13 | 28 | 36 | 33,5 | 87,5 | 19 | 16,7 | 0,730 | 4250 |
| 16 | 5 / 8 | C6XCL16 | 34,5 | 40,5 | 39,5 | 105 | 20,6 | 20,6 | 1,470 | 6300 |

## C6XSH

**D-SCHAKEL - INOX**
STAINLESS STEEL DEE SHACKLES
MANILLES DROITES IN ACIER INOX GERADE
SCHÄKEL AUS ROSTFREIEM STAHL

NEW



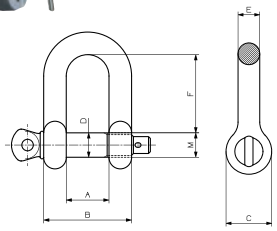

| Code Code Code Code | A mm | B mm | C mm | D mm | E mm | F mm | M mm | Gewicht Weight Poids Gewicht Kg | W.L.L. Kg |
|---|---|---|---|---|---|---|---|---|---|
| C6XSH005 | 18 | 34 | 18 | 9 | 8 | 33 | M10 | 0,070 | 500 |
| C6XSH012 | 25 | 49 | 25 | 13 | 12 | 40 | M14 | 0,220 | 1250 |
| C6XSH020 | 32 | 64 | 32 | 17 | 16 | 60 | M18 | 0,520 | 2000 |
| C6XSH032 | 41 | 79 | 47 | 21 | 19 | 78 | M22 | 0,800 | 3200 |
| C6XSH050 | 56 | 106 | 60 | 29 | 25 | 109 | M30 | 2,200 | 5000 |
| C6XSH130 | 76 | 144 | 75 | 38 | 34 | 152 | M39 | 7,000 | 13000 |

## C6X807 H.T.

**DRAAIBAAR HIJSOOG H.T. INOX GR. 60**
ROTATING EYEBOLT H.T. IN STAINLESS STEEL GR. 60
ANNEAU DE LEVAGE EMERILLON H.T. EN ACIER INOX GR. 60
RINGSCHRAUBE H.T. AUS ROSTFREIEM STAHL GK 6

NEW



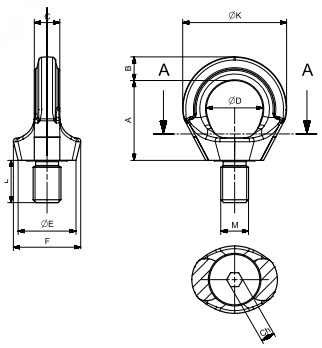

| Code Code Code Code | Maat Size Mesure Abmessung | W.L.L. t | A mm | B mm | C mm | D mm | E mm | F mm | K mm | L mm | CH mm | Gewicht Weight Poids Gewicht Kg |
|---|---|---|---|---|---|---|---|---|---|---|---|---|
| C6X807HT12 | M12 | 0,5 | 43 | 12,5 | 11,5 | 30 | 30 | 36,5 | 55,5 | 18 | 8 | 0,200 |
| C6X807HT16 | M16 | 1 | 49,5 | 14,5 | 15,7 | 35 | 35 | 41,8 | 64,5 | 24 | 10 | 0,350 |
| C6X807HT20 | M20 | 2 | 58 | 16 | 18 | 40 | 42 | 51,5 | 74,5 | 30 | 12 | 0,600 |
| C6X807HT24 | M24 | 2,5 | 69 | 20,5 | 22 | 49 | 50 | 58 | 90 | 36 | 12 | 1 |

## C6XCA

**OOGHAAK MET VEILIGHEIDSKLEP - INOX GRADE 60**
STAINLESS STEEL SLING HOOK WITH LATCH GR60
CROCHET À OEIL AVEC LINGUET IN ACIER INOX GR60
ÖSENLASTHAKEN MIT SICHERUNG AUS ROSTFREIEM STAHL GK 6

NEW



| Ketting Chain Chaîne Kette mm | Ketting Chain Chaîne Kette inch | Code Code Code Code | A mm | B mm | D mm | G mm | H mm | O mm | R mm | S mm | Gewicht Weight Poids Gewicht Kg | W.L.L. Kg |
|---|---|---|---|---|---|---|---|---|---|---|---|---|
| 5 - 6 | 7/32 - 1/4 | C6XCA06SF | 23 | 72 | 8 | 13,5 | 21 | 21 | 90 | 8 | 0,310 | 900 |
| 7 - 8 | 9/32 - 5/16 | C6XCA08SF | 32 | 103 | 13 | 19,5 | 29 | 27 | 118 | 13 | 0,810 | 1600 |
| 10 | 3/8 | C6XCA10SF | 39 | 120 | 15 | 27 | 33 | 37 | 140 | 15 | 1,570 | 2500 |
| 13 | 1/2 | C6XCA13SF | 51 | 155 | 18 | 35 | 46 | 48 | 182 | 18 | 3,090 | 4250 |
| 16 | 5/8 | C6XCA16SF | 66 | 183 | 24 | 44 | 51 | 55 | 213 | 24 | 5,360 | 6300 |

## C6XCB

**GAFFELHAAK MET VEILIGHEIDSKLEP - INOX GR. 60**
CLEVIS SLING HOOK IN STAINLESS STEEL GR. 60
CROCHET À CHAPE AN ACIER INOX GR. 60
LASTHAKEN MIT GABEL AUS ROSTFREIEM STAHL GK 6

NEW



| Ketting Chain Chaîne Kette mm | Ketting Chain Chaîne Kette inch | Code Code Code Code | A mm | B mm | C mm | G mm | H mm | R mm | PxL mm | Gewicht Weight Poids Gewicht Kg | W.L.L. Kg |
|---|---|---|---|---|---|---|---|---|---|---|---|
| 6 | 1/4 | C6XCB06SF | 23 | 7,2 | 8,5 | 13,5 | 21 | 81 | 8x19,5 | 0,33 | 900 |
| 7 | 9/32 | C6XCB07SF | 32 | 9,5 | 12 | 19,5 | 29 | 112 | 8x22,5 | 0,79 | 1250 |
| 8 | 5/16 | C6XCB08SF | 32 | 9,5 | 11 | 19,5 | 29 | 111 | 10x22,5 | 0,84 | 1600 |
| 10 | 3/8 | C6XCB10SF | 39 | 12 | 15 | 27 | 33 | 122,5 | 13x31,5 | 1,43 | 2500 |

## C6XAC

**INKORTKLAUW - INOX GRADE 60**
STAINLESS STEEL SHORTENING CLUTCH GR60
GRIFFE DE RACC OURCISSEMENT IN ACIER INOX GR60
VERKÜRZUNGSKLAUE AUS ROSTFREIEM STAHL GK 6

NEW

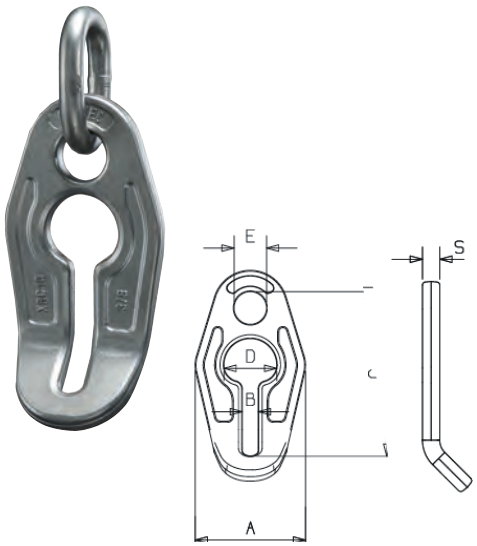

| Ketting Chain Chaîne Kette Ø mm | Ketting Chain Chaîne Kette inch | Code Code Code Code | A mm | B mm | C mm | D mm | E mm | S mm | Gewicht Weight Poids Gewicht Kg | W.L.L. Kg |
|---|---|---|---|---|---|---|---|---|---|---|
| 5 - 6 | 7 / 32 - 1 / 4 | C6XAC06 | 55 | 8 | 81 | 26 | 16 | 8,5 | 0,250 | 900 |
| 7 - 8 | 9 / 32 - 5 / 16 | C6XAC08 | 71 | 11 | 110 | 34 | 22 | 10,5 | 0,590 | 1600 |
| 10 | 3 / 8 | C6XAC10 | 90 | 12 | 135 | 40 | 26 | 13 | 1,130 | 2500 |
| 13 | 1 / 2 | C6XAC13 | 112 | 17 | 170 | 52 | 32 | 16,5 | 2,370 | 4250 |
| 16 | 5 / 8 | C6XAC16 | 135 | 20,5 | 202 | 64 | 38 | 20 | 4,120 | 6300 |

CARTEC

## C6XC8182 — HIJSKETTING INOX GR60 / STAINLESS STEEL CHAIN GR60 / CHAÎNE IN ACIER INOXGR60 / KETTE AUS ROSTFREIEM STAHL GK 6

NEW



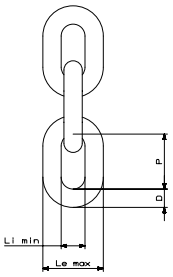


| Ketting / Chain / Chaîne / Kette Ø mm | inch | Code / Code / Code / Code | P mm | Tolerantie / Tolerance / Tolérances / Zul. Abw. mm | Li min mm | Le max mm | W.L.L. Kg | B.F. KN |
|---|---|---|---|---|---|---|---|---|
| 6 | 1/4 | C6XC818206 | 18 | ± 0,5 | 7,8 | 22,2 | 900 | 35,3 |
| 7 | 9/32 | C6XC818207 | 21 | ± 0,6 | 9,1 | 25,9 | 1250 | 49,1 |
| 8 | 5/16 | C6XC818208 | 24 | ± 0,7 | 10,4 | 29,6 | 1600 | 62,8 |
| 10 | 3/8 | C6XC818210 | 30 | ± 0,9 | 13 | 37 | 2500 | 98,1 |
| 13 | 1/2 | C6XC818213 | 39 | ± 1,2 | 16,9 | 48,1 | 4250 | 166,8 |
| 16 | 5/8 | C6XC818216 | 48 | ± 1,4 | 20,8 | 59,2 | 6300 | 247,3 |

## C6XTI — IDENTIFICATIE PLAAT / IDENTIFICATION TAG / PLAQUE DE IDENTIFICATION / KENNENZEICHNUNG STAHLEN-HÄNGER

NEW






| ID-TAG / Tag / Plaque / Stahlen-Hänger | | |
|---|---|---|
| 1 Sprong / 1 leg / 1 brin / 1 Strang | 2/3/4 Sprong / 2/3/4 legs / 2/3/4 brins / 2/3/4 Stränge | |
| XTI01 | XTI02 | |

CARTEC

## C6XPMP — OPHANGKETTING VOOR POMPEN INOX GR60 / CHAIN INOX GRADE 60 FOR PUMPS / CHAINE INOX GRADE 60 POUR POMPES / KETTE AUS ROSTFREIEM STAHL GK 6 FÜR PUMPEN

NEW



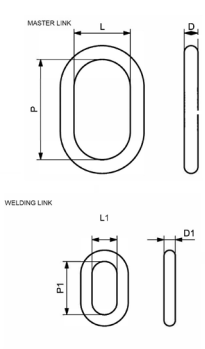


| Catena / Chain / Chaîne / Kette Ømm | inch | Codice / Code / Code / Code | Master Link (A-LINK) mm D | mm P | mm L | Master Link (B-LINK) mm D1 | mm P1 | mm L1 | W.L.L. Kg | Peso / Weight / Poids / Gewicht Kg/m |
|---|---|---|---|---|---|---|---|---|---|---|
| 4 | 5/32 | C6XPMP04 | 7.7 | 70 | 35 | 4 | 16 | 7 | 400 | 0, 35 |
| 5 | 13/64 | C6XPMP05 | 10 | 80 | 50 | 7 | 35 | 16 | 630 | 0,7 |
| 6 | 1/4 | C6XPMP06 | 13 | 110 | 60 | 8 | 35 | 16 | 900 | 1,1 |
| 7 | 9/32 | C6XPMP07 | 13 | 110 | 60 | 8 | 35 | 16 | 1250 | 1,3 |
| 8 | 5/16 | C6XPMP08 | 13 | 110 | 60 | 10 | 44 | 20 | 1600 | 1,8 |
| 10 | 3/8 | C6XPMP10 | 16 | 110 | 60 | 13 | 54 | 25 | 2500 | 3 |
| 13 | 1/2 | C6XPMP13 | 22 | 160 | 90 | 16 | 70 | 34 | 4250 | 11 |
| 16 | 5/8 | C6XPMP16 | 26 | 180 | 100 | 20 | 85 | 40 | 6300 | 17 |



# CHAIN SLINGS & COMPONENTS

## GRADE 80
## GRADE 100

CN-LINE

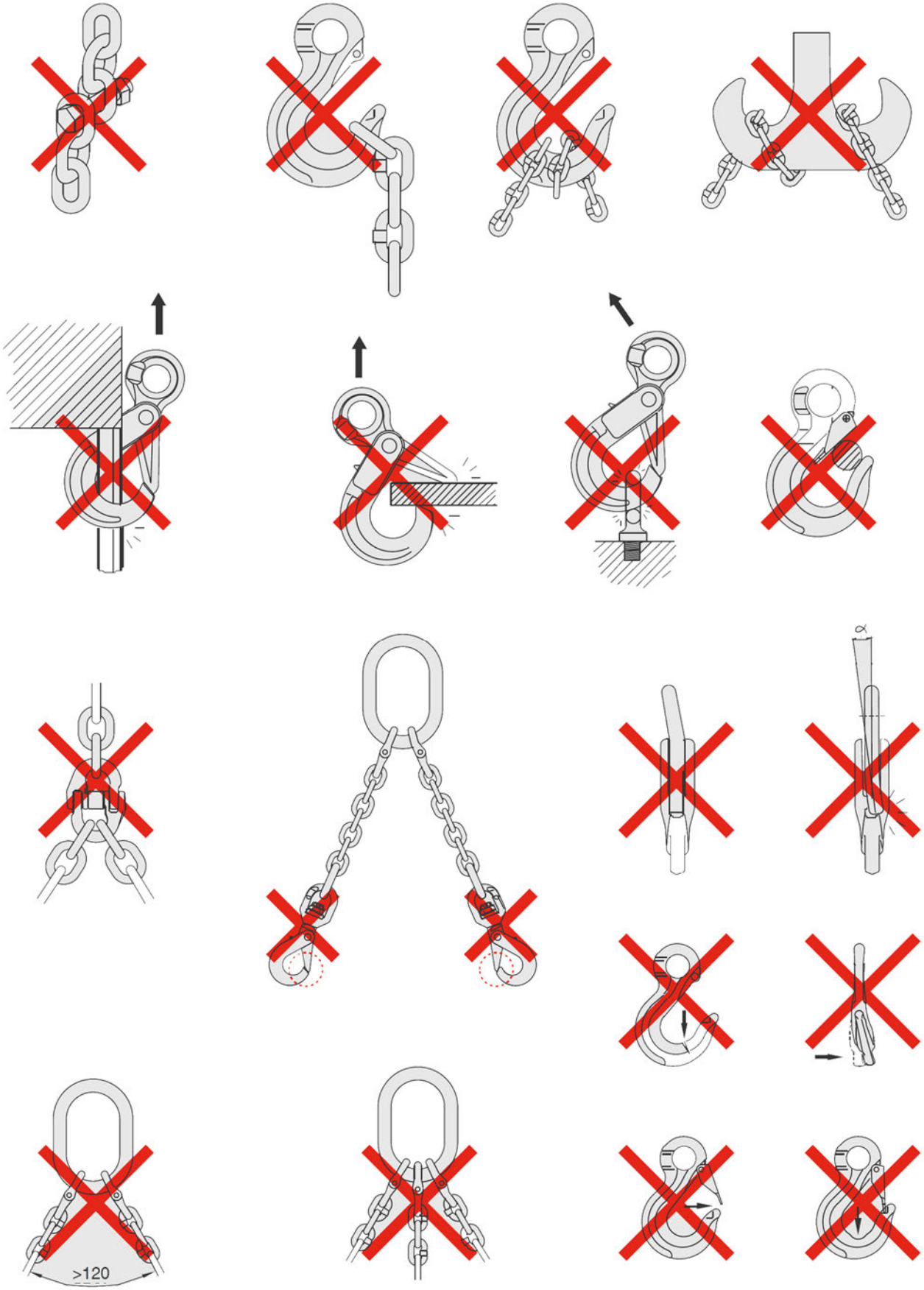
>120

| MAXIMUM WERKBELASTING<br>bij symmetrische belasting<br>WLL in [t]<br>Volgens DIN 5688-8 & EN 818-4<br>&<br>Gebruiksaanwijzing | CHARGE MAXIMUM D'UTILISATION<br>levage symétrique<br>CMU in [t]<br>Suivant DIN 5688-8 & EN 818-4<br>&<br>Mode d'emploi | WORKING LOAD LIMITS<br>to a balanced load<br>WLLin [t]<br>According DIN 5688-8 & EN 818-4<br>&<br>Safety instructions | TRAGFÄHIGKEIT<br>bei symm. Belastung<br>WLL in [t]<br>Nach DIN 5688-8 & EN 818-4<br>&<br>Gebrauchsanleitung |
|---|---|---|---|

Grad 80

WARNING
NEVER EXCEED PUBLISHED WORKING LOAD LIMIT

| Spreidingshoek<br>Angle d'inclinaison<br>Inclination angle<br>Neigungswinkel | 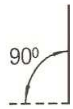 <br>Kettingleng<br>1-brin<br>1-leg<br>1-strang | 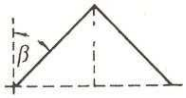 <br>2-sprong<br>2-brins<br>2-legs<br>2-strang | | 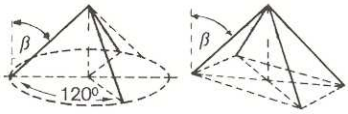 <br>3- en 4 sprong<br>3-et 4 brins<br>3- and 4 legs<br>3- und 4strang | |
|---|---|---|---|---|---|
| | β<br>0° | β<br>0°- 45° | β<br>45°- 60° | β<br>0°- 45° | β<br>45°- 60° |

| Ketting - Chaîne<br>Chain - Kette | | Belastingsfactoren - Facteurs de charge - Stress factors - Belastungsfaktoren (Bf) | | | | |
|---|---|---|---|---|---|---|
| mm | inch | 1 | 1.4 | 1 | 2.1 | 1.5 |
| 6 | 1/4 | 1.12 | 1.60 | 1.12 | 2.36 | 1.70 |
| 7 | 9/32 | 1.50 | 2.12 | 1.50 | 3.15 | 2.24 |
| 8 | 5/16 | 2.00 | 2.80 | 2.00 | 4.25 | 3.00 |
| 10 | 3/8 | 3.15 | 4.25 | 3.15 | 6.70 | 4.75 |
| 13 | 1/2 | 5.30 | 7.50 | 5.30 | 11.20 | 8.00 |
| 16 | 5/8 | 8.00 | 11.20 | 8.00 | 17.00 | 11.80 |
| 18 | 11/16 | 10.00 | 14.00 | 10.00 | 21.20 | 15.00 |
| 19 | 3/4 | 11.20 | 16.00 | 11.20 | 23.60 | 17.00 |
| 20 | 3/4 | 12.50 | 17.00 | 12.50 | 26.50 | 19.00 |
| 22 | 7/8 | 15.00 | 21.20 | 15.00 | 31.50 | 22.40 |
| 26 | 1 | 21.20 | 30.00 | 21.20 | 45.00 | 31.50 |

## Belastingsfactoren - Facteurs des charges - Load factors – Lastfaktoren (Bf)

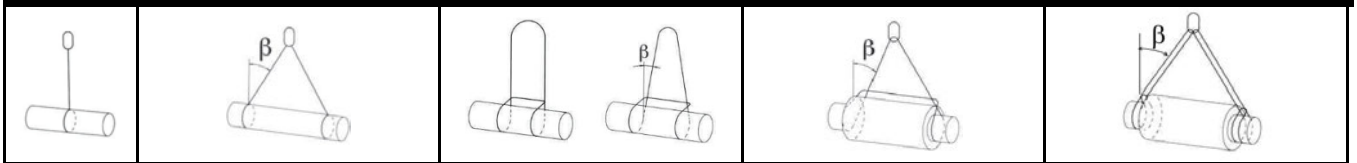


| β=0° | 0°<β≤45° | 45°<β≤60° | β=0° | 0°<β≤25° | 0°<β≤45° | 45°<β≤60° | 0°<β≤45° | 45°<β≤60° |
|---|---|---|---|---|---|---|---|---|
| Bf: 0.8 | Bf: 1.12 | Bf: 0.8 | Bf: 1.6 | Bf: 1.45 | Bf: 1.13 | Bf: 0.8 | Bf: 1.7 | Bf: 1.2 |

## Reductiefactoren – Facteur des Reductions – Reduction factors – Reduktionsfaktoren (Rf)

EDGE LOADING

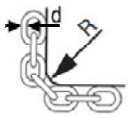


| R > 2x d | R > d | R < d | R < 0.8x d |
|---|---|---|---|
| Rf: 1 | Rf: 0.7 | Rf: 0.5 | |

SHOCK LOADING



| Light impact | Medium impact | Strong impact |
|---|---|---|
| Rf: 1 | Rf: 0.7 | |







| -40°C ⇔ 200°C | 200°C ⇔ 300°C | 300°C ⇔ 400°C | > 400°C - |
|---|---|---|---|
| Rf: 1 | Rf: 0.9 | Rf: 0.75 | |

Ketting EN 818-2 Grade 80 | Chaîne EN 818-2 Grade 80 | Chain EN 818-2 Grade 80 | Kette EN 818-2 Grade 80

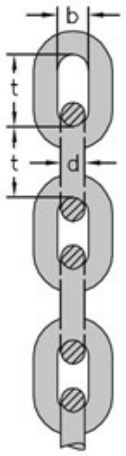


Standaard

Speciale corrosiebescherming voor hijskettingen

Protection de corrosion pour chaîne de levage

Corrosionprotection for Lifting Chains
Korrosionsschutz für Rundstahlketten

CODE

| BP | CN | SP | ZNF |
|---|---|---|---|
| Zwart gelakt<br>Laquées noir<br>Black Painted<br>Schwarz lackiert | Zwart gelakt<br>Laquées noir<br>Black Painted<br>Schwarz lackiert | Speciaal verzinkt<br>Galvanisation spéciale<br>Special Galvanised<br>Special verzinkt | Zinc Flake coated<br>Zinklamminaire<br>Zinc Flake coated<br>Zinklamellenbeschichtung |






| Nominale maat<br>Désignation<br>Nominal size<br>Nenngrösse | | WLL<br>CMU | t | b | Kg | Art.NR<br>Code Art.<br>Stock No.<br>Art.Nr. | Standard L | € | Art.NR<br>Code Art.<br>Stock No.<br>Art.Nr. | Standard L | € | Art.NR<br>Code Art.<br>Stock No.<br>Art.Nr. | Standard L | € | Art.NR<br>Code Art.<br>Stock No.<br>Art. | Standard L | € |
|---|---|---|---|---|---|---|---|---|---|---|---|---|---|---|---|---|---|
| mm | inch | [t] | mm | mm | Kg/m | | m | | | m | | | m | | | m | |
| 6-8 | 1/4 | 1.12 | 18 | 8.0 | 0.8 | 299711006 | 100 | | CNC1818206 | 100 | | 299620006 | 100 | | 299712006 | 100 | |
| 7-8 | 9/32 | 1.50 | 21 | 10.5 | 1.1 | 299711007 | 100 | | CNC1818207 | 100 | | 299620007 | 100 | | 299712007 | 100 | |
| 8-8 | 5/16 | 2.00 | 24 | 10.8 | 1.5 | 299711008 | 100 | | CNC1818208 | 50 | | 299620008 | 100 | | 299712008 | 100 | |
| 10-8 | 3/8 | 3.15 | 30 | 13.5 | 2.3 | 299711010 | 100 | | CNC1818210 | 50 | | 299620010 | 100 | | 299712010 | 50 | |
| 13-8 | 1/2 | 5.30 | 39 | 17.5 | 3.8 | 299711013 | 100 | | CNC1818213 | 50 | | 299620013 | 100 | | 299712013 | 50 | |
| 16-8 | 5/8 | 8.00 | 48 | 21.5 | 6.1 | 299711016 | 100 | | CNC1818216 | 50 | | 299620016 | 100 | | 299712016 | 50 | |
| 18-8 | 11/16 | 10.0 | 54 | 24.3 | 7.3 | 299711018 | 75 | | | | | | | | | | |
| 19-8 | | 11.2 | 57 | 25.0 | 8.5 | 299711019 | 75 | | | | | | | | | | |
| 20-8 | ¾ | 12.5 | 60 | 27.0 | 9.0 | 299711020 | 100 | | CNC1818220 | 60 | | | | | | | |
| 22-8 | 7/8 | 15 | 66 | 29.5 | 10.9 | 299711022 | 100 | | CNC1818222 | 50 | | | | | | | |
| 26-8 | 1 | 21.2 | 78 | 35 | 15.5 | 299711026 | 50 | | CNC1818226 | 30 | | | | | | | |

CE-identificatieplaatje G80 | Plaquettes de marquage – CE/G80 | Identification tag – CE/G80 | Anhänger – CE/G80

| 1-Ketting diameter<br>2-Aantal lengen<br>3-Spreidingshoek<br>4-WLL | 1-Diamétre chaîne<br>2-Nombre de brins<br>3-Angle d'inclinaison<br>4-CMU | 1-Chain thickness<br>2-Number of legs<br>3-Angle-inclination<br>4-WLL | 1-Kettennenndicke<br>2-Strangzahl<br>3-Neigungswinkel<br>4-WLL | Art.NR<br>Code Art.<br>Stock No.<br>Art.Nr. | € | Single-S / Multi-M |
|---|---|---|---|---|---|---|
| ID-ALU TAG S<br>ID-ALU TAG M | ID-ALU TAG S<br>ID-ALU TAG M | ID-ALU TAG S<br>ID-ALU TAG M | ID-ALU TAG S<br>ID-ALU TAG M | 299910012<br>299910013 | | 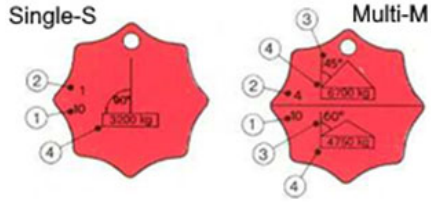 |
| Ø4x250mm<br>Kabel+klem | Ø4x250mm<br>Cable+ferrule | Ø4x250mm<br>Cable+ferrule | Ø4x250mm<br>Seil + Presklemme | 299911001 | |  |
| Set ID-ALU TAG S<br>Set ID-ALU TAG M | Set ID-ALU TAG S<br>Set ID-ALU TAG M | Set ID-ALU TAG S<br>Set ID-ALU TAG M | Set ID-ALU TAG S<br>Set ID-ALU TAG M | 220422<br>220423 | | Set /  |

UNI-identificatieplaatje | Plaquettes de marquage – UNI | Identification tag – UNI | Anhänger – UNI

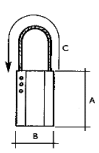

P-NORM

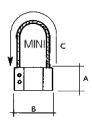

P-MINI




| code | A | B | C | | € |
|---|---|---|---|---|---|
| P-NORM | 60 | 45 | 200 | 220424 | |
| P-MINI | 25 | 45 | 150 | 220425 | |
| ∅70MM / 3MM ALU | | | | 220426 | |



## Topschalm / Anneau simples / Master link / Aufhängeglied
Type MLS
1-2 sprongketting.EN 818-4 / Élingues chaîne 1-2 brins EN 818-4 / 1-2 leg chain slings EN 818-4 / 1-2strang Kettengehänge EN 818-4
Conform EN 1677-4

| Nominale maat Désignation Nominal size Nenngrösse | WLL CMU [t] | 1-leng 1-brin 1-leg 1-strang | 2-leng 2-brin 2-leg 2-strang | d mm | l mm | w mm | KG | Art.NR Code Art. Stock No. Art.Nr. | € |
|---|---|---|---|---|---|---|---|---|---|
| A13 | 1.60 | 7 | 6 | 13 | 110 | 60 | 0.3 | CNC1CM0706 | |
| A16 | 2.12 | 8 | 7 | 16 | 110 | 60 | 0.5 | CNC1CM0807 | |
| A18 | 3.15 | 10 | 8 | 18 | 135 | 75 | 0.8 | CNC1CM1008 | |
| A22 | 5.30 | 13 | 10 | 22 | 160 | 90 | 1.6 | CNC1CM1310 | |
| A26 | 8.00 | 16 | 13 | 26 | 180 | 100 | 2.3 | CNC1CM1613 | |
| A32 | 12.50 | 18 | 16 | 32 | 200 | 110 | 3.9 | CNC1CM1816 | |
| A36 | 17.00 | 20 | 18 | 36 | 260 | 140 | 6.4 | CNC1CM2018 | |
| A40 | 18.00 | 22 | 20 | 40 | 300 | 160 | 8.9 | CNC1CM2220 | |
| A45 | 21.20 | 26 | 22 | 45 | 340 | 180 | 12.8 | CNC1CM2622 | |
| A50 | 31.50 | 32 | 26 | 50 | 350 | 190 | 16.55 | CNC1CM3228 | |
| A56 | 40.00 | 36 | 32 | 56 | 400 | 200 | 23.28 | CNC1CM3632 | |

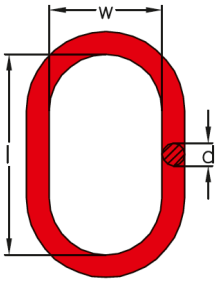


## Topschalm DIN5688-3 / Anneau triples DIN5688-3 / Master link DIN5688-3 / Aufhängeglied DIN5688-3
Type MLT
3-4 sprongketting EN 818-4 / Élingues chaîne 3-4 brins EN 818-4 / 3-4 leg chain slings EN 818-4 / 3-4 strang Kettengehänge EN 818-4
Conform EN 1677-4

| Nominale maat Désignation Nominal size Nenngrösse | WLL CMU [t] | d1 mm | l1 mm | w1 mm | d2 mm | l2 mm | w2 mm | t mm | KG | Art.NR Code Art. Stock No. Art.Nr. | € |
|---|---|---|---|---|---|---|---|---|---|---|---|
| 6-8 | 2.36 | 18 | 135 | 75 | 13 | 54 | 25 | 189 | 1.2 | CNC1CMC06 | |
| 7-8 | 3.15 | 18 | 135 | 75 | 13 | 54 | 25 | 189 | 1.2 | CNC1CMC07 | |
| 8-8 | 4.25 | 22 | 160 | 90 | 16 | 70 | 34 | 230 | 2.3 | CNC1CMC08 | |
| 10-8 | 6.70 | 26 | 180 | 100 | 18 | 85 | 40 | 265 | 3.4 | CNC1CMC10 | |
| 13-8 | 11.20 | 32 | 200 | 110 | 22 | 115 | 50 | 315 | 6.1 | CNC1CMC13 | |
| 16-8 | 17.00 | 36 | 260 | 140 | 26 | 140 | 65 | 400 | 9.9 | CNC1CMC16 | |
| 18-8 | 21.20 | 45 | 340 | 180 | 32 | 180 | 100 | 520 | 18.5 | CNC1CMC18 | |
| 20-8 | 26.50 | 50 | 350 | 190 | 32 | 180 | 100 | 530 | 22.6 | CNC1CMC20 | |
| 22-8 | 31.50 | 50 | 350 | 190 | 36 | 180 | 100 | 530 | 25.19 | CNC1CMC22 | |
| 26-8 | 45.00 | 57 | 400 | 200 | 40 | 180 | 100 | 580 | 36.00 | CNC1CMC26 | |

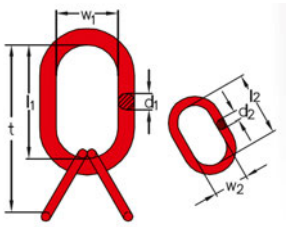


## Verbindingsschalm / Maillon de jonction / Connecting Link / Verbindungsglied
Type VG-CN

| Nominale maat Désignation Nominal size Nenngrösse | WLL CMU [t] | A mm | B mm | C mm | D mm | E mm | G mm | H mm | O mm | N mm | Kg | Art.NR Code Art. Stock No. Art.Nr. | € |
|---|---|---|---|---|---|---|---|---|---|---|---|---|---|
| 6-8 | 1.12 | 58.7 | 36 | 44.7 | 11.8 | 7 | 18.5 | 16 | 6.8 | 17.6 | 0.07 | VGCN8CL06 | |
| 7-8 | 1.50 | 65 | 41.8 | 48 | 13.8 | 8.5 | 19.5 | 18.5 | 8.3 | 20 | 0.10 | VGCN8CL07 | |
| 7/8-8 | 2.00 | 77 | 48 | 58.5 | 15 | 9.5 | 24 | 20.5 | 8.5 | 23 | 0.15 | VGCN8CL078 | |
| 8-8 | 2.00 | 92.5 | 51 | 73.5 | 17.8 | 9.5 | 31.5 | 22.7 | 9.5 | 24.5 | 0.25 | VGCN8CL08 | |
| 10-8 | 3.15 | 101 | 57 | 77.2 | 19.8 | 12 | 32 | 25 | 11.5 | 27 | 0.30 | VGCN8CL10 | |
| 13-8 | 5.30 | 116 | 72 | 85 | 22 | 15.5 | 34.5 | 30 | 15.5 | 33 | 0.55 | VGCN8CL13 | |
| 16-8 | 8.00 | 145 | 106 | 106 | 22 | 21 | 41 | 33.8 | 21 | 38.5 | 1.03 | VGCN8CL16 | |
| 20-8 | 12.50 | 166 | 98 | 119 | 33 | 24 | 48 | 41.8 | 22 | 46 | 2.10 | VGCN8CL20 | |
| 22-8 | 15.00 | 190 | 131 | 140 | 37 | 26 | 57 | 49.5 | 26.8 | 57 | 3.07 | VGCN8CL22 | |
| 26-8 | 21.20 | 216 | 156 | 154 | 42.5 | 31.4 | 65 | 58 | 30 | 67.5 | 4.50 | VGCN8CL26 | |
| 32-8 | 31.50 | 277 | 192 | 204 | 46.5 | 38 | 85 | 67.5 | 37 | 84.5 | 8.21 | VGCN8CL32 | |

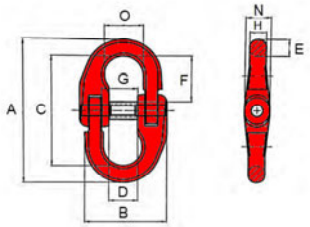


## Verbindingsschalm voor hijsbanden / Maillon de jonction pour sangles / Webbing Coupling link / Verbindungsglied – Schlinge
Type VTX-CN

| Nominale maat Désignation Nominal size Nenngrösse | WLL CMU [t] | A mm | B mm | C mm | D mm | E mm | F mm | G mm | H mm | I mm | Kg | Art.NR Code Art. Stock No. Art.Nr. | € |
|---|---|---|---|---|---|---|---|---|---|---|---|---|---|
| 7/8-8 | 2.00 | 40 | 58 | 24 | 20 | 24 | 14 | 17 | 9 | 10 | 0.28 | VTXCN8CLS08 | |
| 10-8 | 3.15 | 40 | 81 | 35 | 30 | 30 | 14 | 23 | 11 | 13 | 0.47 | VTXCN8CLS10 | |
| 13-8 | 5.30 | 55 | 104 | 48 | 36 | 36 | 18 | 28 | 16 | 16 | 0.99 | VTXCN8CLS13 | |

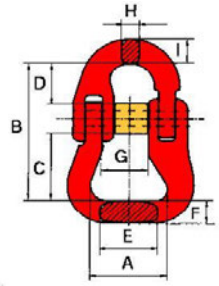

## Veiligheidshaak met gaffel / Crochet de securité à chape / Self Locking clevis hook / Sicherheitslasthaak
Type LSG-CN

| Nominale maat Désignation Nominal size Nenngrösse | WLL CMU [t] | A mm | B mm | G mm | H mm | R mm | T mm | Kg | Art.NR Code Art. Stock No. Art.Nr. | € |
|---|---|---|---|---|---|---|---|---|---|---|
| 6-8 | 1.12 | 30 | 8 | 15 | 20 | 99 | 28 | 0,45 | LSGCN8CRF06 | |
| 7/8-8 | 2.00 | 40 | 9,5 | 20 | 26 | 119 | 35 | 0,85 | LSGCN8CRF08 | |
| 10-8 | 3.10 | 48 | 12,5 | 26 | 30 | 142 | 45 | 1,48 | LSGCN8CRF10 | |
| 13-8 | 5.30 | 57 | 15 | 33 | 40 | 179 | 53 | 2,85 | LSGCN8CRF13 | |
| 16-8 | 8.00 | 65 | 18,5 | 38 | 50,5 | 225 | 63 | 6 | LSGCN8CRF16 | |
| 20-8 | 12.50 | 85 | 24 | 50 | 55 | 238 | 85 | 7,5 | LSGCN8CRF20 | |
| 22-8 | 15.00 | 80 | 25 | 52 | 67 | 277 | 76 | 12,3 | LSGCN8CRF22 | |
| 26-8 | 21.20 | 109 | 30 | 60 | 75 | 312 | 96 | 21,8 | LSGCN8CRF26 | |

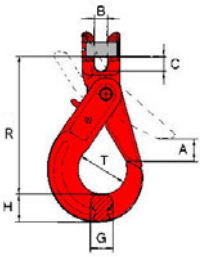


## Veiligheidshaak met oog / Crochet de securité à œil / Self Locking eyehook / Sicherheitslasthaak mit Öse
Type LSO

| Nominale maat Désignation Nominal size Nenngrösse | WLL CMU [t] | A mm | D mm | G mm | H mm | O mm | R mm | T mm | Kg | Art.NR Code Art. Stock No. Art.Nr. | € |
|---|---|---|---|---|---|---|---|---|---|---|---|
| 6-8 | 1.12 | 32 | 11 | 15 | 20 | 21 | 110 | 28 | 0,5 | LSOCN8CRO06 | |
| 7/8-8 | 2.00 | 39 | 13 | 20 | 26 | 25 | 136 | 35 | 0,88 | LSOCN8CRO08 | |
| 10-8 | 3.15 | 48 | 15 | 26 | 30 | 34,5 | 169 | 45 | 1,58 | LSOCN8CRO10 | |
| 13-8 | 5.30 | 65 | 21 | 33 | 40 | 40 | 207 | 52,5 | 3 | LSOCN8CRO13 | |
| 16-8 | 8.00 | 65 | 27 | 38 | 50,5 | 50 | 254 | 63 | 5,9 | LSOCN8CRO16 | |
| 20-8 | 12.50 | 85 | 27 | 50 | 55 | 64,5 | 278 | 85 | 7 | LSOCN8CRO20 | |
| 22-8 | 15.00 | 80 | 32 | 52 | 67 | 70 | 319 | 76 | 12,3 | LSOCN8CRO22 | |
| 26-8 | 21.20 | 109 | 34 | 60 | 75 | 80 | 362 | 96 | 18 | LSOCN8CRO22 | |

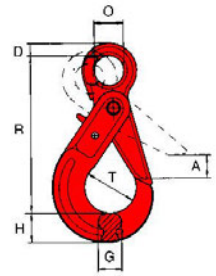


## Veiligheidshaak met wartel / Crochet de securité à emerilllon / Swivel Self Locking hook / Sicherheitslasthaak mit Öse-drehbar
Type LSW

| Nominale maat Désignation Nominal size Nenngrösse | WLL CMU [t] | R mm | A mm | B mm | O mm | D mm | G mm | H mm | Kg | Art.NR Code Art. Stock No. Art.Nr. | € |
|---|---|---|---|---|---|---|---|---|---|---|---|
| 6 - 8 | 152 | 28 | 25,5 | 32,5 | 12 | 15 | 20 | 0,7 | 152 | LSWCN8CRF06 | |
| 7/8 - 8 | 189 | 35 | 29,5 | 36 | 13 | 20 | 26 | 1,21 | 189 | LSWCN8CRF08 | |
| 10 - 8 | 223 | 45 | 39 | 42 | 15 | 26 | 30 | 1,98 | 223 | LSWCN8CRF10 | |
| 13 - 8 | 267 | 52,5 | 41 | 50 | 16 | 33 | 40 | 3,59 | 267 | LSWCN8CRF13 | |
| 16 - 8 | 339 | 63 | 58 | 61 | 21 | 38 | 50,5 | 7,27 | 339 | LSWCN8CRF16 | |
| 20 - 8 | 370 | 82 | 63 | 72 | 27 | 50 | 55 | 10,75 | 370 | LSWCN8CRF20 | |
| 22 - 8 | 466 | 76 | 98 | 97 | 31 | 52 | 67 | 17,5 | 466 | LSWCN8CRF22 | |
| 26 - 8 | 544 | 96 | 115 | 123 | 42 | 60 | 75 | 23 | 544 | LSWCN8CRF26 | |

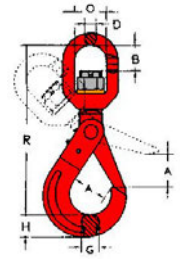


## Gaffelhaak" / Crochet à chape / Clevis hook / Gabelhaak
Type SGX-SF-CN
met gesmede veiligheidsklep"F" / avec linguet forgé"F" / with Forged safety Latch"F" / Mit Geschmiede Sicherungsfalle "F"

| | Nominale maat Désignation Nominal size Nenngrösse | WLL CMU [t] | A mm | A1 mm | B mm | C mm | G mm | H mm | P mm | R mm | Kg | Art.NR Code Art. Stock No. Art.Nr. | € |
|---|---|---|---|---|---|---|---|---|---|---|---|---|---|
| SGX-CN-SF | 6-8 | 1.12 | 25 | 19 | 7 | 8 | 14 | 20 | 7 | 73 | 0.24 | SGXSFCN8CB06 | |
| | 7/8-8 | 2.00 | 29 | 25 | 9 | 10 | 19 | 27 | 9 | 87 | 0.53 | SGXSFCN8CB08 | |
| | 10-8 | 3.15 | 35 | 29 | 12 | 13 | 23 | 33 | 13 | 105 | 0.95 | SGXSFCN8CB10 | |
| | 13-8 | 5.30 | 43 | 35 | 15 | 17 | 28 | 40 | 16 | 128 | 1.67 | SGXSFCN8CB13 | |
| | 16-8 | 8.00 | 56 | 45 | 18 | 22 | 37 | 48 | 20 | 155 | 3.00 | SGXSFCN8CB16 | |
| | 20-8 | 12.50 | 61 | 53 | 23 | 26 | 46 | 52 | 24 | 183 | 5.70 | SGXSFCN8CB20 | |

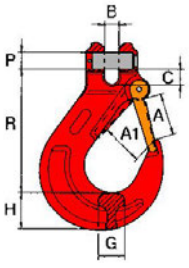


## Ooghaak / Crochet à oeil / Eye hook / Osehaak
Type SOX-SL-CN
met gesmede veiligheidsklep"F" / avec linguet forgé"F" / with Forged safety Latch"F" / Mit Geschmiede Sicherungsfalle "F"

| | Nominale maat Désignation Nominal size Nenngrösse | WLL CMU [t] | A mm | A2 mm | D mm | G mm | H mm | O mm | R mm | Kg | Art.NR Code Art. Stock No. Art.Nr. | € |
|---|---|---|---|---|---|---|---|---|---|---|---|---|
| SOX-SF | 6-8 | 1.12 | 25 | 25 | 9 | 14.5 | 20 | 20.5 | 80.5 | 0.3 | SOXSFCN8CA06 | |
| | 7/8-8 | 2.00 | 29 | 26 | 11 | 19 | 27 | 25 | 95.5 | 0.5 | SOXSFCN8CA08 | |
| | 10-8 | 3.15 | 36 | 31 | 14 | 23.5 | 33 | 34 | 120.5 | 0.9 | SOXSFCN8CA10 | |
| | 13-8 | 5.30 | 44 | 41 | 18 | 29 | 40 | 42.5 | 150 | 1.5 | SOXSFCN8CA13 | |
| | 16-8 | 8.00 | 53 | 50 | 22 | 35.5 | 49 | 52 | 183 | 2.8 | SOXSFCN8CA16 | |

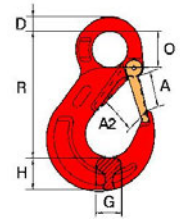

## Inkorthaak met oog / Crochet de racourdissement a oeil / Eye grab hook / Verkürzungshaak
Type VOX-CN

| Nominale maat Désignation Nominal size Nenngrösse | WLL CMU [t] | A mm | D mm | G mm | H mm | O mm | R mm | Kg | Art.NR Code Art. Stock No. Art.Nr. | € |
|---|---|---|---|---|---|---|---|---|---|---|
| 6-8 | 1.12 | 8 | 8.5 | 22 | 22 | 13.5 | 53.5 | 0.18 | VOXCN8CD06 | |
| 7/8-8 | 2.00 | 10 | 10 | 30 | 24 | 16 | 60 | 0.23 | VOXCN8CD08 | |
| 10-8 | 3.15 | 13 | 11 | 44 | 31 | 21 | 80 | 0.59 | VOXCN8CD10 | |
| 13-8 | 5.30 | 17 | 16 | 53 | 38 | 26 | 104 | 1.24 | VOXCN8CD13 | |
| 16-8 | 8.00 | 20 | 19 | 64 | 60 | 30 | 129 | 2.60 | VOXCN8CD16 | |
| 20-8 | 12.50 | 23 | 22 | 85 | 65 | 36 | 153 | 4.20 | VOXCN8CD20 | |
| 22-8 | 15.00 | 26 | 30 | 87 | 71 | 42 | 184 | 5.35 | VOXCN8CD22 | |

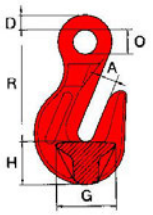


## Inkorthaak met gaffel / Crochet de racourdissement / Clevis Grab hook / Verkürzungshaak
Type CFX-CN

| Nominale maat Désignation Nominal size Nenngrösse | WLL CMU [t] | A mm | B mm | C mm | G mm | H mm | R mm | Kg | Art.NR Code Art. Stock No. Art.Nr. | € |
|---|---|---|---|---|---|---|---|---|---|---|
| 6-8 | 1.12 | 8 | 8 | 8.8 | 22 | 22 | 51.5 | 0.2 | CFXCN8CF06 | |
| 7/8-8 | 2.00 | 10 | 9 | 10 | 30 | 24 | 50 | 0.27 | CFXCN8CF08 | |
| 10-8 | 3.15 | 13 | 13 | 14 | 44 | 31 | 72 | 0.75 | CFXCN8CF10 | |
| 13-8 | 5.30 | 17 | 17 | 17 | 53 | 38 | 88 | 1.35 | CFXCN8CF13 | |
| 16-8 | 8.00 | 20 | 21 | 20 | 64 | 44 | 102 | 2.30 | CFXCN8CF16 | |
| 20-8 | 12.50 | 24 | 24 | 24 | 85 | 53 | 117 | 4.10 | CFXCN8CF20 | |
| 22-8 | 15.00 | 26 | 26 | 26 | 97 | 62 | 139 | 5.65 | CFXCN8CF22 | |

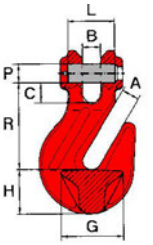


## Inkorthaak met gaffel met borgpen / Crochet de racourd.a. goujon . / Clevis Grab hook w. safety Pin / Verkürzungshaak m Sicherung
Type CFXS-CN

| Nominale maat Désignation Nominal size Nenngrösse | WLL CMU [t] | A mm | B mm | C mm | D mm | E mm | Kg | Art.NR Code Art. Stock No. Art.Nr. | € |
|---|---|---|---|---|---|---|---|---|---|
| 6-8 | 1.12 | 8 | 32 | 75 | 44 | 8 | 0.30 | CFXSCN8D06 | |
| 7/8-8 | 2.00 | 10 | 35 | 89 | 50 | 11 | 0.40 | CFXSCN8D08 | |
| 10-8 | 3.15 | 13 | 43 | 127 | 71 | 14 | 0.90 | CFXSCN8D10 | |
| 13-8 | 5.30 | 15 | 63 | 164 | 90 | 17 | 1.90 | CFXSCN8D13 | |
| 16-8 | 8.00 | 20 | 66 | 184 | 113 | 20 | 3.30 | CFXSCN8D16 | |

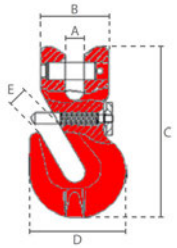


## Inkortklauw met gaffel & veiligheid / Griffe de racourdissement & securité / Shortening clutch with safety / Verkürzungsklaue mit Sicherung
Type KSX

| Nominale maat Désignation Nominal size Nenngrösse | WLL CMU [t] | A mm | B mm | C mm | D mm | E mm | F mm | G mm | Kg | Art.NR Code Art. Stock No. Art.Nr. | € |
|---|---|---|---|---|---|---|---|---|---|---|---|
| 6-8 | 1.12 | 8 | 8 | 10 | 8 | 19 | 45 | 23 | 0.21 | KSXCN8CX06S | |
| 8-8 | 2.00 | 9.5 | 9.5 | 10 | 9.5 | 23.5 | 56 | 29 | 0.48 | KSXCN8CX08S | |
| 10-8 | 3.15 | 12 | 12 | 14.5 | 12 | 32.5 | 78 | 36 | 1.12 | KSXCN8CX10S | |
| 13-8 | 5.30 | 15.5 | 15.5 | 18 | 15.5 | 44 | 90 | 35 | 1.83 | KSXCN8CX13S | |

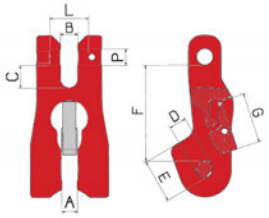


## Container/Gieterijhaak met oog / Crochet de fonderie à œil / Eye foundry hook / Container/ weitmaulhaken mit ose
Type WOX

| Nominale maat Désignation Nominal size Nenngrösse | WLL CMU [t] | A mm | D mm | G mm | H mm | O mm | R mm | Kg | Art.NR Code Art. Stock No. Art.Nr. | € |
|---|---|---|---|---|---|---|---|---|---|---|
| 6-8 | 1.12 | 63 | 11 | 25,5 | 31 | 18 | 121 | 1,05 | WOXCN8CY06 | |
| 7/8-8 | 2.00 | 63 | 11 | 25,5 | 31 | 18 | 121 | 1,05 | WOXCN8CY08 | |
| 10-8 | 3.10 | 76 | 16 | 32,5 | 38 | 22 | 147 | 2,03 | WOXCN8CY10 | |
| 13-8 | 5.30 | 88 | 20 | 38 | 44,5 | 27 | 175 | 3,19 | WOXCN8CY13 | |
| 16-8 | 8.00 | 102 | 22 | 46 | 52 | 32 | 206 | 5,39 | WOXCN8CY16 | |
| 20-8 | 12.50 | 113,5 | 25 | 56 | 65 | 38 | 235,5 | 9,1 | WOXCN8CY20 | |
| 22-8 | 15.00 | 127,5 | 29 | 57 | 69 | 45 | 263 | 11,6 | WOXCN8CY22 | |
| 26-8 | 21.20 | 140 | 32 | 66 | 75 | 66,5 | 295 | 16,8 | WOXCN8CY26 | |
| 32-8 | 31.50 | 151 | 35 | 80 | 97,5 | 81,5 | 328 | 27,2 | WOXCN8CY32 | |

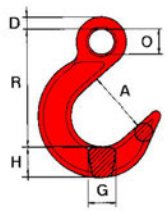

## Wisselstukken. Pieces de rechange Spare parts Ersatzteilen

| Nominale maat / Désignation / Nominal size / Nenngrösse | Klepset-trigger / Set-déclencheur / Triggerset / Sperklinkenset<br>Type LSG-LSO-LSW-KSX | | | | Veiligheidsklepset / Set- linguet de securité / Safety Latch set / Schnepper Set<br>Type SGX-SOX | | Gaffelset / Chappe-set / Clevis pin Set / Gabel Set<br>Type SGX-LSG-KSX-KFX-WGX-CFX-FHX | | | | | | As(A) + Borghuls(B) / Axe(A) + Compass(B) / Bolt(A) + Compass(B) / Bolz(A) + Feder(B)<br>Type VGX | |
|---|---|---|---|---|---|---|---|---|---|---|---|---|---|---|
| |  | | | |  | |  | | | | | |  | |
| | Art.NR<br>Code Art.<br>Stock No.<br>Art.Nr. | LSG-CN LSO-CN LSW-CN | KSX | | Art.NR<br>Code Art.<br>Stock No.<br>Art.Nr | € | Art.NR<br>Code Art.<br>Stock No.<br>Art.Nr. | SGX-CN | LSG-CN | KSX-CN | CFX-CN | € | Art.NR<br>Code Art.<br>Stock No.<br>Art.Nr.€ | |
| 6-8 | CNC1CKSL06B | ● | | | CNC1CKS06 | | CNCKP06CRF | | ● | | | | | |
| 6-8 | CNC1CKX06 | | ● | | | | | | | | | | | |
| 7-8 | | | | | | | | | | | | | | |
| 7/8-8 | CNC1CKSL08B | ● | | | | | CNCKP08CRF | | ● | | | | | |
| 8-8 | CNC1CKX08 | | ● | | CNC1CKS08 | | | | | | | | | |
| 10-8 | CNC1CKX10 | | ● | | | | CNCKP10CRF | | ● | | | | | |
| 10-8 | CNC1CKSL10B | ● | | | CNC1CKS10 | | | | | | | | | |
| 13-8 | CNC1CKX13 | | ● | | CNC1CKS13 | | CNCKP13CRF | | ● | | | | | |
| 13-8 | CNC1CKSL13B | ● | | | | | | | | | | | | |
| 16-8 | | | | | | | CNCKP16CRF | | ● | | | | | |
| 16-8 | CNC1CKSL16B | ● | | | CNC1CKS16 | | | | | | | | | |
| SGX 16-8 | | | | | | | | | | | | | | |
| SOX 16-8 | | | | | | | | | | | | | | |
| 20-8 | | | | | CNC1CKS20 | | | | | | | | | |
| 20-8 | CNC1CKSL20 | ● | | | | | CNCKP20CRF | | ● | | | | | |
| 22-8 | CNC1CKSL22 | ● | | | | | CNCKP22CRF | | ● | | | | | |
| 26-8 | CNC1CKSL26 | ● | | | | | C1CKP26CRF | | ● | | | | | |
| 32-8 | | | | | | | | | | | | | | |

## Draaibaar Hijsoog / Anneau de levage avec articulation / Swivel Hoist Ring / Anschlagwirbel mit gelenk
## Type A837-CN

| Nominale maat / Désignation / Nominal size / Nenngrösse | WLL / CMU [t] | A mm | B mm | C mm | D mm | E mm | F mm | G mm | H mm | L mm | N mm | Ch mm | Kg | Art.NR<br>Code Art.<br>Stock No.<br>Art.Nr. | € |
|---|---|---|---|---|---|---|---|---|---|---|---|---|---|---|---|
| M8 | 0,4 | 36 | 12 | 50 | 8 | 35 | 34 | 38 | 68 | 18 | 53 | 6 | 0,46 | A83708CN | |
| M10 | 0,7 | 36 | 12 | 48 | 10 | 37 | 34 | 38 | 68 | 18 | 53 | 8 | 0,47 | A83710CN | |
| M12 | 1 | 36 | 12 | 46 | 12 | 39 | 34 | 38 | 68 | 23 | 53 | 10 | 0,48 | A83712CN | |
| M14 | 1,3 | 36 | 12 | 44 | 14 | 41 | 34 | 38 | 68 | 23 | 53 | 12 | 0,50 | A83714CN | |
| M16 | 1,6 | 36 | 12 | 42 | 16 | 43 | 34 | 38 | 68 | 28 | 53 | 14 | 0,53 | A83716CN | |

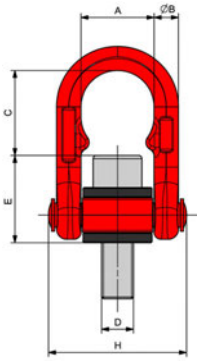


**W.L.L [t]**



| Art.NR<br>Code Art.<br>Stock No.<br>Art.Nr | Maat<br>Size<br>Mesure<br>Abmess. | 0° | 0° | 90° | 90° | 0°-45° | 45°-60° | Assym | 0°-45° | 45°-60° | Assym | Max. aandraaimoment<br>Max tightening couple<br>Max couple de serrage<br>Max Drehmoment |
|---|---|---|---|---|---|---|---|---|---|---|---|---|
| | | 1L | 2L | 1L | 2L | 2L | | | 3L / 4L | | | (Nm) |
| A83708CN | M8 | 0,4 | 0,8 | 0,4 | 0,8 | 0,56 | 0,3 | 0,3 | 0,85 | 0,6 | 0,4 | 6,5 |
| A83710CN | M10 | 0,7 | 1,4 | 0,7 | 1,4 | 1 | 0,6 | 0,6 | 1,5 | 1 | 0,7 | 13 |
| A83712CN | M12 | 1 | 2 | 1 | 2 | 1,4 | 1 | 1 | 2,1 | 1,5 | 1 | 22 |
| A83714CN | M14 | 1,3 | 2,6 | 1,3 | 2,6 | 1,8 | 1,3 | 1,3 | 2,7 | 2 | 1,3 | 35 |
| A83716CN | M16 | 1,6 | 3,2 | 1,6 | 3,2 | 2,2 | 1,6 | 1,6 | 3,4 | 2,4 | 1,6 | 55 |

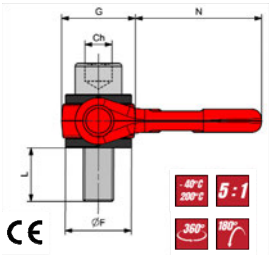

Wisselstukken.CN-LINE | Pieces de rechange CN-LINE | Spare parts CN-LINE | Ersatzteilen CN-LINE

| | Klepset-trigger<br>Set-déclencheur<br>Triggerset<br>Sperklinkenset<br>Type<br><br>LSG-CN<br>LSG-CN<br>LSW-CN<br>KSX-CN | | | | | | Veiligheidsklepset<br>Set- linguet de securité<br>Safety Latch set<br>Schnepper Set<br>Type<br><br>SGX-CN<br>SOX-CN | | | | Gaffelset<br>Chappe-set<br>Clevis pin Set<br>Gabel Set<br>Type<br><br>SGX-CN<br>LSG-CN<br>KSX-CN<br>KFX-CN<br>WGX-CN<br>CFX-CN<br>FHX-CN | | | | | | As(A) + Borghuls(B)<br>Axe(A) + Compass(B)<br>Bolt(A) + Compass(B)<br>Bolz(A) + Feder(B)<br>Type<br><br>VGX-CNV | |
|---|---|---|---|---|---|---|---|---|---|---|---|---|---|---|---|---|---|---|---|
| | |  | |  | | |  | | | |  | | | | | |  | |
| Nominale maat<br>Désignation<br>Nominal size<br>Nenngrösse | Art.NR<br>Code Art.<br>Stock No.<br>Art.Nr. | LSG-CN | LSO-CN | LSW-CN | KSX-CN | € | Art.NR<br>Code Art.<br>Stock No.<br>Art.Nr | SGX-CN | SGX-CN | € | Art.NR<br>Code Art.<br>Stock No.<br>Art.Nr. | SGX-CN | LSG-CN | KSX-CN | CFX-CN | € | Art.NR<br>Code Art.<br>Stock No.<br>Art.Nr.€ | € |
| 6-8 | CNC1CKSL06B | • | • | • | | | CNC1CKS06 | • | • | | CNCKP06CRF | | • | | | | | |
| 6-8 | CNC1CKX06 | | | | • | | | | | | | | | | | | | |
| 7-8 | | | | | | | | | | | | | | | | | | |
| 7/8-8 | CNC1CKSL08B | • | • | • | | | | | | | CNCKP08CRF | | • | | | | | |
| 8-8 | CNC1CKX08 | | | | • | | CNC1CKS08 | • | • | | | | | | | | | |
| 10-8 | CNC1CKX10 | | | | • | | | | | | CNCKP10CRF | | • | | | | | |
| 10-8 | CNC1CKSL10B | • | • | • | | | CNC1CKS10 | • | • | | | | | | | | | |
| 13-8 | CNC1CKX13 | | | | • | | CNC1CKS13 | • | • | | CNCKP13CRF | | • | | | | | |
| 13-8 | CNC1CKSL13B | • | • | • | | | | | | | | | | | | | | |
| 16-8 | | | | | | | | | | | CNCKP16CRF | | • | | | | | |
| 16-8 | CNC1CKSL16B | • | • | • | | | CNC1CKS16 | • | • | | | | | | | | | |
| 20-8 | | | | | | | CNC1CKS20 | • | • | | | | | | | | | |
| 20-8 | CNC1CKSL20 | • | • | • | | | | | | | CNCKP20CRF | | • | | | | | |
| 22-8 | CNC1CKSL22 | • | • | • | | | | | | | CNCKP22CRF | | • | | | | | |
| 26-8 | | | | | | | | | | | | | | | | | | |
| 32-8 | | | | | | | | | | | | | | | | | | |

| MAXIMUM WERKBELASTING<br>Symmetrische belasting<br>Volgens. EN 818-2<br>&<br>Gebruiksaanwijzing<br>WLL [t] | CHARGE MAX. D'UTILISATION<br>levage symmétrique<br>Suivant EN 818-2<br>&<br>Mode d'emploi<br>CMU [t] | WORKING LOAD LIMITS<br>to a balanced load<br>Acc. EN 818-2<br>&<br>Safety instructions<br>WLL [t] | TRAGFAHIGKEIT<br>Symm. Belastung<br>Acc. EN 818-2<br>&<br>Gebrauchsanleitung<br>WLL [t] |
|---|---|---|---|

**GRADE 100**

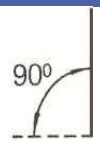


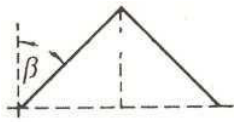


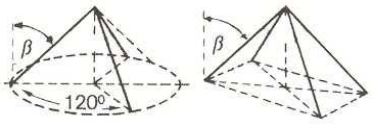


| | Kettingleng<br>1-brin<br>1-leg<br>1-strang | 2-sprong<br>2-brins<br>2-legs<br>2-strang | | 3- en 4 sprong<br>3-et 4 brins<br>3- and 4 legs<br>3- und 4 strang | |
|---|---|---|---|---|---|
| Spreidingshoek<br>Angle d'inclinaison<br>Inclination angle<br>Neigungswinkel | β = 0° | β = 0°- 45° | β = 45°- 60° | β = 0°- 45° | β = 45°- 60° |
| Ø<br>Ketting - Chain<br>Chaine Kette | Belastingsfaktor - Facteur de charge - Load factor - Lastsfaktor<br>(Bf) | | | | |
| mm / inch | 1 | 1.4 | 1 | 2.1 | 1.5 |
| 6 / 1/4 | 1.40 | 2.00 | 1.40 | 3.00 | 2.10 |
| 7 / 9/32 | 1.90 | 2.60 | 1.90 | 4.00 | 2.80 |
| 8 / 5/16 | 2.50 | 3.50 | 2.50 | 5.30 | 3.70 |
| 10 / 3/8 | 4.00 | 5.60 | 4.00 | 8.00 | 6.00 |
| 13 / 1/2 | 6.70 | 9.50 | 6.70 | 14.00 | 10.00 |
| 16 / 5/8 | 10.00 | 14.00 | 10.00 | 21.20 | 15.00 |
| 20 / 3/4 | 16.00 | 22.40 | 16.00 | 33.60 | 24.00 |
| 22 / 7/8 | 19.00 | 26.00 | 19.00 | 40.00 | 28.00 |
| 26 / 1 | 26.50 | 37.10 | 26.50 | 55.60 | 39.70 |
| 32 / 1 1/4 | 40.00 | 56.00 | 40.00 | 85.00 | 60.00 |

Belastingsfactoren - Facteurs des charges - Load factors – Lastfaktoren
(Bf)

| POS 1 | POS 2 | | POS 3 | POS 4 | | POS 5 | | POS 6 | |
|---|---|---|---|---|---|---|---|---|---|
|  | 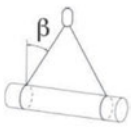 | | 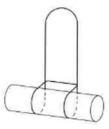 | 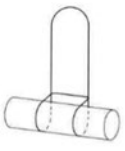 | 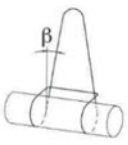 | 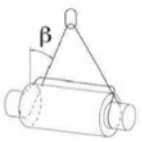 | | 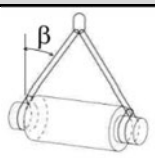 | |
| β=0° | 0°<β≤45° | 45°<β≤60° | | β=0° | 0°<β≤25° | 0°<β≤45° | 45°<β≤60° | 0°<β≤45° | 45°<β≤60° |
| Bf: 0.8 | Bf: 1.12 | Bf: 0.8 | Bf: 1.6 | Bf: 1.6 | Bf: 1.45 | Bf: 1.13 | Bf: 0.8 | Bf: 1.7 | Bf: 1.2 |

Reductiefactoren - Facteurs des Reduction - Reduction factors – Reduktionstfaktoren
(Rf)




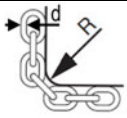


| R > 2x d | R > d | R < d |
|---|---|---|
| Rf: 1 | Rf: 0.7 | Rf: 0.5 |






| Light impact | Medium impact | Strong impact |
|---|---|---|
| Rf: 1 | Rf: 0.7 |  |







| -40°C ⇔ 200°C | > 200°C |
|---|---|
| Rf: 1 |  |

# Type VGXC-CN

## Verbindingsschalm
## Maillon de jonction
## *Connecting link*
## *Verbindungsglied*

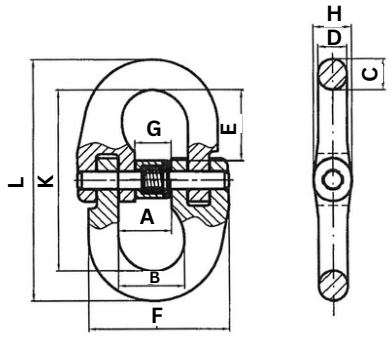




NEW

| Art.Nr. | W.L.L. | A | B | C | D | E | F | G | H | K | L | |
|---|---|---|---|---|---|---|---|---|---|---|---|---|
| | Kg | mm | mm | mm | mm | mm | mm | mm | mm | mm | mm | Kg |
| DXC1CLX06 | 1.400 | 14 | 17 | 8,5 | 7 | 16 | 36,5 | 10 | 12 | 44,5 | 62 | 0,08 |
| DXC1CLX07 | 1.900 | 18,5 | 22,5 | 10 | 8 | 23 | 48 | 12,5 | 15 | 60 | 79 | 0,16 |
| DXC1CLX078 | 2.500 | 18,5 | 22 | 11 | 8,5 | 23 | 48 | 13 | 15,5 | 59 | 81 | 0,17 |
| DXC1CLX08 | 2.500 | 18,5 | 23 | 10,5 | 10 | 24 | 49,5 | 12,5 | 14 | 63 | 84 | 0,18 |
| DXC1CLX10 | 4.000 | 23 | 23 | 12,5 | 12,5 | 28 | 61,5 | 16 | 18 | 71 | 96 | 0,34 |
| DXC1CLX13 | 6.700 | 28 | 33,5 | 16,5 | 16,5 | 34 | 77,5 | 19 | 23 | 92,5 | 126 | 0,68 |
| DXC1CLX16 | 10.000 | 33,5 | 39 | 20 | 20 | 39 | 93 | 23 | 29,5 | 106,5 | 147 | 1,22 |
| DXC1CLX20 | 16.000 | 42 | 47,5 | 25 | 25 | 42 | 112 | 30,5 | 35 | 123 | 175 | 2,13 |
| DXC1CLX22 | 19.000 | 48 | 55 | 27 | 27 | 50 | 129 | 33,5 | 39 | 137,5 | 193 | 3 |
| DXC1CLX26 | 26.500 | 61 | 68 | 32 | 32 | 63 | 155,5 | 44 | 45,5 | 163 | 229 | 5,22 |
| DXC1CLX32 | 40.000 | 80 | 87 | 40 | 40 | 78 | 198,5 | 59 | 54 | 197 | 279 | 9,55 |

# Type CXXC-CN

## Inkortklauw met gaffel & veiligheid
## Griffe de racourdissement & securité
## Clevis clutch with locking pin
## Verkürzungsklaue mit Sicherung

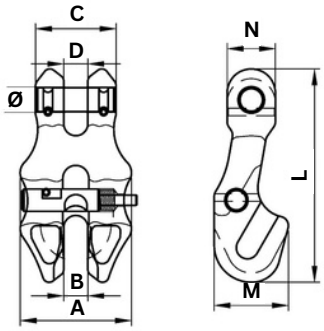




NEW

| Art.Nr. | W.L.L. | A | B | C | D | M | N | Ø | L | |
|---|---|---|---|---|---|---|---|---|---|---|
| | Kg | mm | mm | mm | mm | mm | mm | mm | mm | Kg |
| DXC1CXX06S | 1.400 | 38 | 7,5 | 27 | 7,5 | 29 | 16 | 7,5 | 73 | 0,25 |
| DXC1CXX08S | 2.500 | 50 | 9,5 | 33 | 9,5 | 36 | 23 | 9 | 92 | 0,41 |
| DXC1CXX10S | 4.000 | 60 | 12 | 43,5 | 12 | 45,5 | 26 | 13 | 115 | 0,8 |
| DXC1CXX13S | 6.700 | 79 | 15 | 55 | 15 | 54 | 34 | 16 | 149 | 1,67 |
| DXC1CXX16S | 10.000 | 98 | 19 | 70 | 19 | 70 | 40 | 19,5 | 184 | 4,2 |

# Type VOXC-CN

**Inkorthaak met oog**
**Crochet de racourdissement a oeil**
***Eye grab hook***
***Verkürzungshaak mit öse***

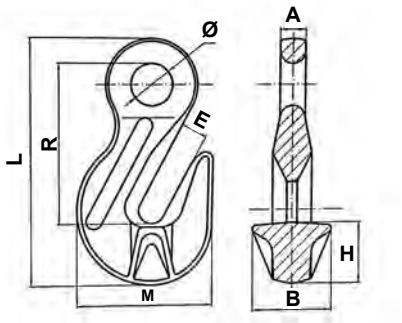





| Art.Nr. | W.L.L. | A | B | E | H | L | M | R | Ø | |
|---|---|---|---|---|---|---|---|---|---|---|
| | Kg | mm | mm | mm | mm | mm | mm | mm | mm | Kg |
| DXC1CDX06 | 1.400 | 8 | 25,5 | 8 | 18 | 73 | 46,5 | 46 | 13,5 | 0,15 |
| DXC1CDX08 | 2.500 | 9,5 | 33,5 | 11 | 22 | 93 | 53 | 61 | 17,5 | 0,3 |
| DXC1CDX10 | 4.000 | 14 | 42 | 13,5 | 30 | 129 | 74 | 85 | 22 | 0,79 |
| DXC1CDX13 | 6.700 | 18,5 | 53,5 | 17 | 43 | 166 | 96 | 104 | 27 | 1,67 |
| DXC1CDX16 | 10.000 | 22 | 74 | 19 | 45 | 186 | 116 | 119 | 36 | 2,74 |
| DXC1CDX20 | 16.000 | 23 | 87 | 25 | 56 | 225 | 145 | 146 | 44 | 4,72 |

# Type CFXC-CN

**Inkorthaak met gaffel**
**Crochet de racourdissement**
***Clevis grab hook***
**Verkürzungshaak mit gabel**

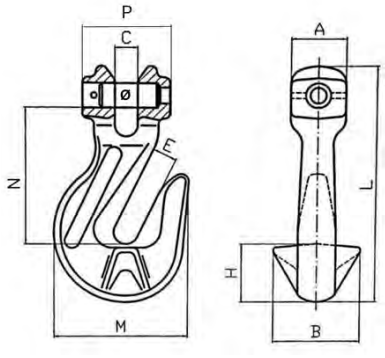





| Art.Nr. | W.L.L. | A | B | C | E | H | L | M | N | P | Ø | |
|---|---|---|---|---|---|---|---|---|---|---|---|---|
| | Kg | mm | mm | mm | mm | mm | mm | mm | mm | mm | mm | Kg |
| DXC1CFX06 | 1.400 | 18 | 25,5 | 7,5 | 8 | 18 | 77,5 | 46,5 | 44,5 | 32 | 7,5 | 0,22 |
| DXC1CFX08 | 2.500 | 24 | 33,5 | 9,5 | 11 | 22 | 93 | 54 | 53 | 36 | 10 | 0,34 |
| DXC1CFX10 | 4.000 | 29,5 | 42 | 12,5 | 13,5 | 31 | 127 | 72 | 73 | 46 | 13 | 0,82 |
| DXC1CFX13 | 6.700 | 37 | 53,5 | 15 | 15 | 45,5 | 164 | 96 | 92 | 59 | 16 | 1,75 |
| DXC1CFX16 | 10.000 | 46 | 74 | 18,5 | 19 | 48,5 | 188 | 115 | 103 | 70 | 19,5 | 2,88 |
| DXC1CFX20 | 16.000 | 52 | 87 | 24 | 25 | 55 | 223 | 145 | 123 | 85 | 24 | 4,84 |

# Type SOXC-CN

**Ooghaak met gesmede veiligheidsklep**
**Crochet à oeil avec linguet forgé**
***Eye sling hook with safety latch***
***Osehaak mit Geschmiede Sicherungsfalle***

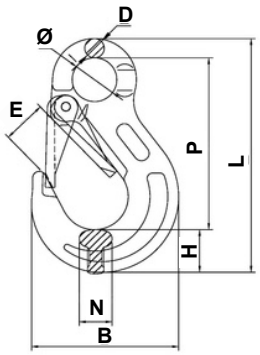




NEW

| Art.Nr. | W.L.L. | B | D | E | H | L | N | P | Ø | |
|---|---|---|---|---|---|---|---|---|---|---|
| | Kg | mm | mm | mm | mm | mm | mm | mm | mm | Kg |
| DXC1CAX06SF | 1.400 | 68 | 10 | 18,5 | 21 | 111 | 16,5 | 80 | 20,5 | 0,32 |
| DXC1CAX08SF | 2.500 | 87 | 11 | 25 | 27 | 137 | 17 | 99 | 25 | 0,6 |
| DXC1CAX10SF | 4.000 | 105 | 16 | 29,5 | 33 | 170 | 24 | 106 | 32 | 1,2 |
| DXC1CAX13SF | 6.700 | 138 | 19 | 38 | 43,5 | 219 | 33 | 156,5 | 43 | 2,2 |
| DXC1CAX16SF | 10.000 | 158 | 24 | 46 | 50 | 260 | 40 | 185,5 | 51 | 3,5 |

# Type SGXC-CN

**Gaffelhaak met gesmede veiligheidsklep**
**Crochet à chape avec linguet forgé**
***Clevis sling hook with safety latch***
***Osehaak mit Geschmiede Sicherungsfalle***

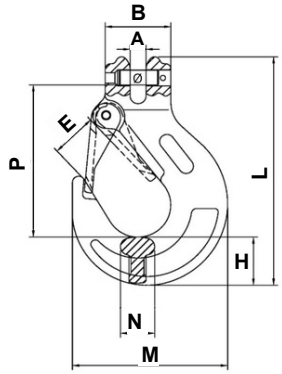




NEW

| Art.Nr. | W.L.L. | A | B | E | H | L | M | N | P | Ø | Peso Weight |
|---|---|---|---|---|---|---|---|---|---|---|---|
| | Kg | mm | mm | mm | mm | mm | mm | mm | mm | mm | Kg |
| DXC1CBX06SF | 1.400 | 7,5 | 32 | 17 | 21 | 109 | 68,5 | 16,5 | 73 | 7,5 | 0,33 |
| DXC1CBX08SF | 2.500 | 9,5 | 37 | 23 | 27,5 | 134 | 88 | 17 | 88,5 | 10 | 0,6 |
| DXC1CBX10SF | 4.000 | 12,5 | 48 | 29 | 32 | 160 | 102 | 24 | 105 | 13 | 1,3 |
| DXC1CBX13SF | 6.700 | 15 | 59 | 38 | 42 | 203 | 134 | 34 | 132 | 16 | 2,3 |
| DXC1CBX16SF | 10.000 | 18,5 | 70 | 46 | 50 | 248 | 160,5 | 38 | 161 | 19,5 | 3,6 |
| DXC1CBX20SF | 16.000 | 25 | 85 | 50 | 56 | 297 | 190,5 | 48 | 197 | 24 | 7,3 |

# Type LSOC-CN

## Veiligheidshaak met oog
## Crochet de securité à oeil
## *Self locking eye hook*
## *Sicherheitslasthaak mit Öse*

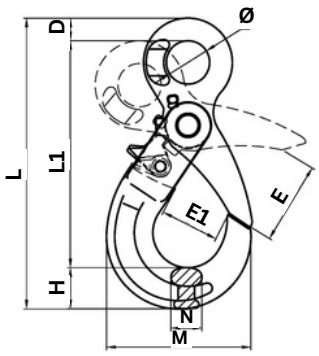





| *Art.Nr.* | W.L.L. | D | E | E11 | H | L | L1 | M | N | Ø | |
|---|---|---|---|---|---|---|---|---|---|---|---|
| | Kg | mm | mm | mm | mm | mm | mm | mm | mm | mm | Kg |
| DXC1CROX06 | 1.400 | 11 | 31,5 | 28 | 20 | 141 | 110 | 73 | 15 | 21 | 0,5 |
| DXC1CROX08 | 2.500 | 12 | 40 | 36 | 26 | 175 | 137 | 90 | 20 | 27 | 0,9 |
| DXC1CROX10 | 4.000 | 15 | 46 | 45 | 27 | 212 | 170 | 108 | 26 | 34,5 | 1,5 |
| DXC1CROX13 | 6.700 | 20 | 66 | 53,5 | 40 | 269 | 209 | 137,5 | 32,5 | 40 | 2,7 |
| DXC1CROX16 | 10.000 | 27 | 75 | 61 | 50 | 333 | 256 | 170,5 | 38 | 50 | 5,7 |
| DXC1CROX20 | 16.000 | 30 | 80 | 76,5 | 61 | 368,5 | 277 | 191,5 | 50 | 60 | 7,9 |
| DXC1CROX22 | 19.000 | 33 | 104 | 80 | 65 | 417 | 319 | 205 | 52 | 70 | 11,2 |

# Type LSGC-CN

## Veiligheidshaak met gaffel
## Crochet de Sécurité à chape
## *Self locking clevis hook*
## *Sicherheitslasthaak*

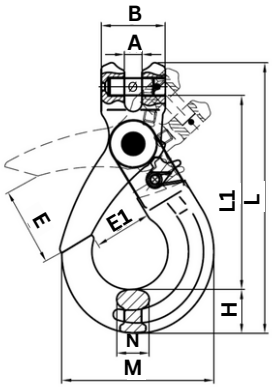





| *Art.Nr.* | W.L.L. | A | B | E | E11 | H | L | L11 | M | N | Ø | |
|---|---|---|---|---|---|---|---|---|---|---|---|---|
| | Kg | mm | mm | mm | mm | mm | mm | mm | mm | mm | mm | Kg |
| DXC1CRFX06 | 1.400 | 8 | 32 | 31,5 | 28 | 19,5 | 131 | 96 | 73 | 15 | 7,5 | 0,5 |
| DXC1CRFX08 | 2.500 | 9,5 | 36 | 40 | 36 | 25,5 | 163 | 121 | 90 | 20 | 10 | 0,9 |
| DXC1CRFX10 | 4.000 | 12 | 46 | 46 | 45 | 29,5 | 194 | 144 | 108 | 26 | 13 | 1,4 |
| DXC1CRFX13 | 6.700 | 15 | 59 | 66 | 53,5 | 39,5 | 251 | 182 | 137 | 32,5 | 16 | 2,9 |
| DXC1CRFX16 | 10.000 | 18,5 | 70 | 75 | 61 | 50 | 303 | 220 | 168 | 38 | 19,5 | 5,5 |
| DXC1CRFX20 | 16.000 | 25 | 85 | 80 | 76,5 | 60,5 | 337 | 235 | 190 | 50 | 24 | 8,6 |
| DXC1CRFX22 | 19.000 | 25,5 | 98 | 104 | 80 | 65 | 386 | 271 | 202 | 52 | 28 | 12,1 |

# Type LSWC-CN

**Veiligheidshaak met wartel**
**Gancio di sicurezza girevole**
**Self locking swivel hook**
**Sicherheitslasthaak mit Öse-drehbar**

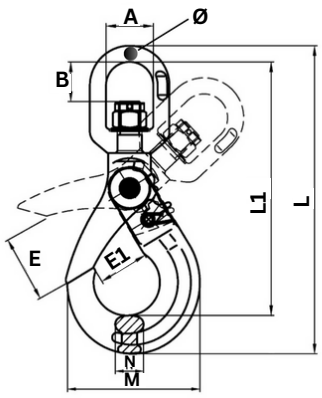




NEW

| *Art.Nr.* | W.L.L. | A | B | E | E11 | L | L11 | M | N | Ø | |
|---|---|---|---|---|---|---|---|---|---|---|---|
| | Kg | mm | mm | mm | mm | mm | mm | mm | mm | mm | Kg |
| DXC1CRGX06 | 1.400 | 32,5 | 25,5 | 31,5 | 28 | 184 | 152,5 | 73 | 15 | 11,5 | 0,6 |
| DXC1CRGX08 | 2.500 | 36 | 28,5 | 40 | 36 | 226 | 188 | 90 | 20 | 13 | 1,1 |
| DXC1CRGX10 | 4.000 | 42 | 35 | 46 | 45 | 269 | 225,5 | 108 | 26 | 15,5 | 2 |
| DXC1CRGX13 | 6.700 | 50 | 41 | 66 | 53,5 | 327 | 270 | 137,5 | 32,5 | 17 | 4 |
| DXC1CRGX16 | 10.000 | 70 | 58 | 75 | 61 | 413 | 342 | 170,5 | 38 | 21,5 | 6,8 |

# Type WOXC-CN

**Container/Gieterijhaak met oog**
***Crochet de fonderie à oeil***
***Eye foundry hook***
***Container/ weitmaulhaken mit öse***

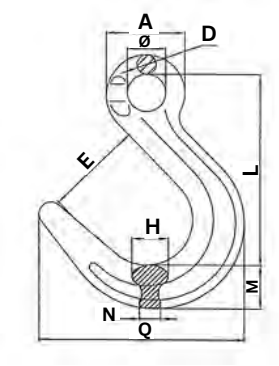




NEW

| *Art.Nr.* | W.L.L. | A | D | E | H | M | N | Ø | Q | L | |
|---|---|---|---|---|---|---|---|---|---|---|---|
| | Kg | mm | mm | mm | mm | mm | mm | mm | mm | mm | Kg |
| DXC1CYX06 | 1.400 | 43,5 | 10 | 49 | 17 | 19 | 11 | 20 | 100 | 103 | 0,38 |
| DXC1CYX08 | 2.500 | 49 | 12 | 62 | 19 | 27 | 12 | 24 | 128 | 120,5 | 0,71 |
| DXC1CYX10 | 4.000 | 63,5 | 15 | 73 | 25 | 30 | 15 | 31,5 | 152,5 | 153 | 1,36 |
| DXC1CYX13 | 6.700 | 84 | 19 | 90 | 33 | 39 | 23 | 44 | 186 | 184 | 2,57 |
| DXC1CYX16 | 10.000 | 97 | 22 | 105 | 37 | 42 | 26,5 | 49 | 218 | 216 | 3,96 |
| DXC1CYX20 | 16.000 | 117 | 26 | 114 | 46 | 57 | 32 | 60 | 251 | 247 | 7,3 |

# Kit LSO-LSG-LSW(C-CN)

**Klepset-trigger**
**Set-déclencheur**

**Sperklinkenset**

- ✓ Type LSOC-CN
- ✓ Type LSGC-CN
- ✓ Type LSWC-CN

NEW



| *Art.Nr.* | mm |
|---|---|
| DXC1CKSL06B | 6 |
| DXC1CKSL08B | 8 |
| DXC1CKSL10B | 10 |
| DXC1CKSL13B | 13 |
| DXC1CKSL16 | 16 |
| DXC1CKSL20 | 20 |
| DXC1CKSL22 | 22 |

# Kit SOX/SGX-SF(C-CN)

**Veiligheidsklepset**
**Set- linguet de securité**
**Forged Latch kit for sling hooks**
**Schnepper Set**

- ✓ Type SOXC-CN
- ✓ Type SGXC-CN

NEW



| *Art.Nr.* | mm |
|---|---|
| DXC1CKSX06 | 6 |
| DXC1CKSX08 | 8 |
| DXC1CKSX10 | 10 |
| DXC1CKSX13 | 13 |
| DXC1CKSX16 | 16 |
| DXC1CKSX20 | 20 |

# Kit CXXC-CN

***Set-Lockpin***
***Set-déclencheur***

***Sperklinkenset***

- ✓ Type CXXC-CN

NEW



| *Art.Nr.* | mm |
|---|---|
| DXC1CKX06 | 6 |
| DXC1CKX08 | 8 |
| DXC1CKX10 | 10 |
| DXC1CKX13 | 13 |
| DXC1CKX16 | 16 |

# Type EN818-2-C-CN

## Ketting EN 818-2 Chaîne EN 818-2
## Chain EN 818-2 Kette EN 818-2

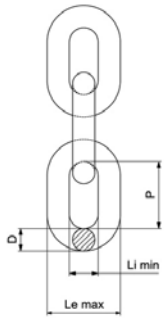


NEW



| Art.Nr. | W.L.L. | DØ | DØ | P | Li min | Le max | |
|---|---|---|---|---|---|---|---|
| | Kg | mm | inch | mm | mm | mm | Kg/mt |
| DXC18182X06 | 1.400 | 6 | 1/4 | 18 | 8 | 22 | 0,9 |
| DXC18182X07 | 1.900 | 7 | 9/32 | 21 | 9 | 26 | 1,2 |
| DXC18182X08 | 2.500 | 8 | 5/16 | 24 | 10,5 | 29,5 | 1,6 |
| DXC18182X10 | 4.000 | 10 | 3/8 | 30 | 13 | 37 | 2,5 |
| DXC18182X13 | 6.700 | 13 | 1/2 | 39 | 17 | 48 | 4,2 |
| DXC18182X16 | 10.000 | 16 | 5/8 | 48 | 21 | 59 | 6,2 |
| DXC18182X20 | 16.000 | 20 | 3/4 | 60 | 26 | 74 | 10 |

# Type MLSC-CN

## Topschalm 1/2 Leng
## Anneau simples 1/2 Brins
## Oblong masterlink 1/2 Leg
## Aufhängeglied 1/2 Strang

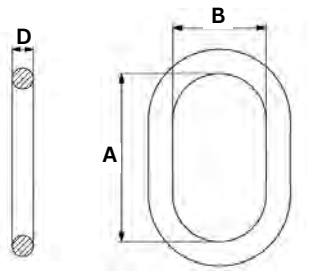


NEW



| Art.Nr. | ⊥ | W.L.L. 0° | Λ | W.L.L. 0°-45° | A | B | D | |
|---|---|---|---|---|---|---|---|---|
| | | Kg | | Kg | mm | mm | mm | Kg |
| DXC1CMX0706 | 6 | 1.900 | 6 | 2.000 | 110 | 60 | 13 | 0,34 |
| DXC1CMX0807 | 8 | 2.500 | 7 | 2.650 | 110 | 60 | 16 | 0,53 |
| DXC1CMX1008 | 10 | 4.000 | 8 | 3.550 | 135 | 75 | 18 | 0,86 |
| DXC1CMX1310 | 13 | 6.700 | 10 | 5.600 | 160 | 90 | 22 | 1,60 |
| DXC1CMX1613 | 16 | 10.000 | 13 | 9.500 | 180 | 100 | 26 | 2,30 |
| DXC1CMX1816 | 18 | 12.500 | 16 | 14.000 | 200 | 110 | 32 | 3,90 |
| DXC1CMX2018 | 20 | 16.000 | 18 | 17.500 | 260 | 140 | 36 | 6,40 |
| DXC1CMX2220 | 22 | 19.000 | 20 | 22.400 | 300 | 160 | 40 | 8,90 |
| DXC1CMX2622 | 26 | 26.500 | 22 | 26.500 | 340 | 180 | 45 | 12.8 |

# Type MLTC-CN

***Topschalm 3/4 Leng***
***Anneau Triple 3/4 Brins***
***Masterlink 3/4 Leg***
***Aufhängeglied 3/4 Strang***

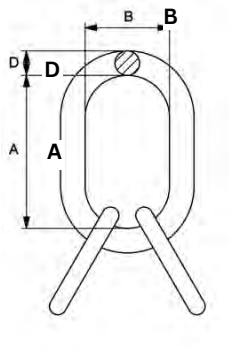


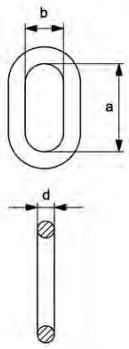




NEW

| *Art.Nr.* | W.L.L. 0°-45° | W.L.L. 45°-60° | A | B | D | a | b | d | |
|---|---|---|---|---|---|---|---|---|---|
| | Kg | Kg | mm | mm | mm | mm | mm | mm | Kg |
| DXC1CMCX06 | 3.000 | 2.120 | 135 | 75 | 18 | 54 | 25 | 14 | 1,26 |
| DXC1CMCX08 | 5.300 | 3.750 | 160 | 90 | 22 | 70 | 34 | 16 | 2,19 |
| DXC1CMCX10 | 8.400 | 6.000 | 180 | 100 | 27 | 85 | 40 | 18 | 3,6 |
| DXC1CMCX13 | 14.000 | 10.000 | 200 | 110 | 33 | 115 | 50 | 22 | 6,35 |
| DXC1CMCX16 | 21.200 | 15.000 | 260 | 140 | 36 | 140 | 65 | 28 | 10,61 |
| DXC1CMCX20 | 33.600 | 24.000 | 350 | 190 | 50 | 180 | 90 | 32 | 23,67 |
| DXC1CMCX22 | 40.000 | 28.000 | 350 | 190 | 50 | 180 | 100 | 36 | 26 |

# Type MLT25C-CN

**Speciale Topschalm-NR25**
**voor kraanhaak DIN 15401**

**Anneau triple-NR25**
**pour crochets DIN 15401**

***Special Master link-NR25***
***for Hooks DIN 15401***

***Aufhängeglied-NR25***
***für Haken DIN 15401***

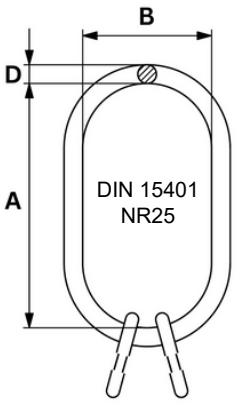


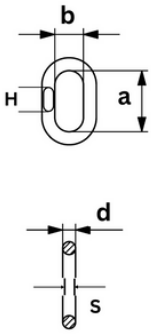




NEW

| *Art.Nr.* | W.L.L. 0°-45° | W.L.L. 45°-60° | A | B | D | a | b | d | SxH | |
|---|---|---|---|---|---|---|---|---|---|---|
| | Kg | Kg | mm | mm | mm | mm | mm | mm | mm | Kg |
| DXC1COCX25T408 | 5.300 | 3.750 | 340 | 180 | 26 | 70 | 35 | 14 | 8x25 | 4,25 |
| DXC1COCX25T410 | 8.400 | 6.000 | 340 | 180 | 32 | 90 | 45 | 18 | 11x28 | 7,36 |
| DXC1COCX25T413 | 14.000 | 10.000 | 340 | 180 | 40 | 100 | 50 | 22 | 13x43 | 11,9 |
| DXC1COCX25T416 | 21.200 | 15.000 | 340 | 180 | 40 | 120 | 60 | 25 | 14x45 | 12,9 |

# 100

## Type DKAC-CN

**ISO- Containerhaak**
**ISO- Anneau pour container**
**ISO- Containerhook**
**ISO- Containerhaak**

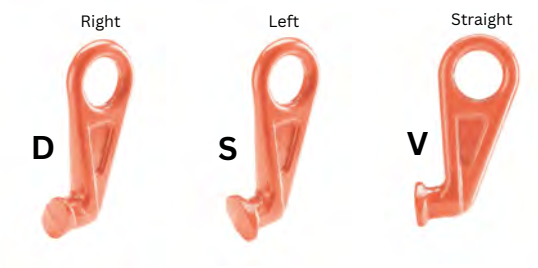





**C839X160D**

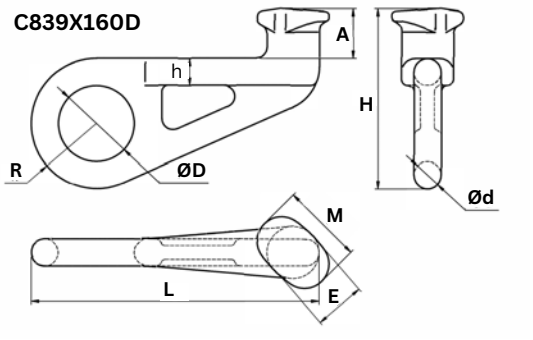


**C839X160S**

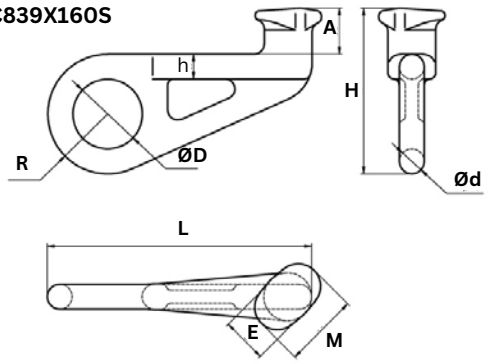


**C839X160V**

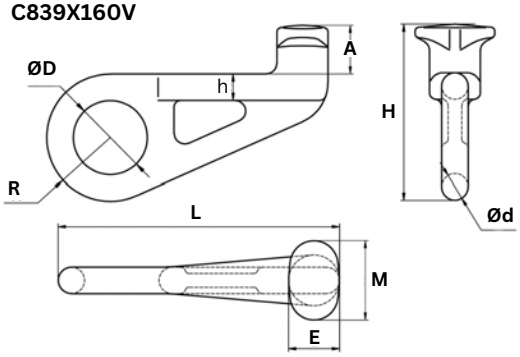


RAL 3022

| *Art.Nr.* | W.L.L. | A | E | H | h | L | M | R | D | d | |
|---|---|---|---|---|---|---|---|---|---|---|---|
| | Kg | mm | mm | mm | mm | mm | mm | mm | mm | mm | Kg |
| DXC839X160D | 16.000 | 46 | 48 | 166 | 25 | 265 | 75 | 60 | 70 | 25 | 4 |
| DXC839X160S | 16.000 | 46 | 48 | 166 | 25 | 265 | 75 | 60 | 70 | 25 | 4 |
| DXC839X160V | 16.000 | 46 | 48 | 166 | 25 | 265 | 75 | 60 | 70 | 25 | 4 |

# GRADE 100

## COMPONENTEN
## COMPONENTS
## COMPONENTS
## KOMPONENTEN





## CARTEC100
## &
## SPECIALS G100

De voortdurende verbeteringen en het onderzoek dat nodig is om producten aan te bieden die voortdurend innovatief en van topkwaliteit zijn, hebben geleid tot de ontwikkeling van CARTEC100.
Door het gekende montage systeem te behouden en vast te houden aan een beleid met steeds vernieuwende productiesystemen, is de CARTEC100 productlijn van Carcano S.p.A. een solide en budgetvriendelijk alternatief voor producten van Grade80.
Carcano S.p.A. kreeg het ℋ 92" homologatienummer van het Duitse organisme DGUV-Hannover, m.b.t. de CARTEC100-hijsaccessoires.
Hiermee zijn wij het vierde bedrijf ter wereld dat over deze prestigieuze en specifieke “third party ”certificering beschikt.
Wat maakt dat de CARTEC100 producten aan de hoogste kwaliteitsstandaard voldoen, zoals hieronder beschreven:

- Geen wezenlijke verandering in vorm en dimensionering ten opzichte van de Grade80
- +25% hijscapaciteit dan Grade80
- Gewichtsbesparing door kleinere kettingdiameter tov. zelfde capaciteit
- Lagere slijtage door hardere materialen
- Epoxy coating - RAL 3022

Les améliorations et recherches continues nécessaires pour proposer des produits constamment innovants et de qualité supérieure ont conduit au développement de CARTEC100.
En conservant le système d'assemblage bien connu et en s'en tenant à une politique de systèmes de production constamment innovants, la ligne de produits CARTEC100 de Carcano S.p.A. est une alternative solide et économique aux produits Grade80.
Carcano S.p.A. a reçu le numéro d'homologation 'ℋ 92 " de l'organisme allemand DGUV-Hanover, concernant les accessoires de levage CARTEC100.
Cela fait de nous la quatrième entreprise au monde à détenir cette certification tierce partie prestigieuse et spécifique.
Les produits CARTEC100 répondent donc aux normes de qualité les plus strictes, comme décrit ci-dessous :

- Aucune modification substantielle de la forme et des dimensions par rapport à la Grade80
- Capacité de levage supérieure de 25 % à celle de la Grade80
- Gain de poids grâce à un diamètre de chaîne plus petit par rapport à la même capacité
- Usure plus faible grâce à des matériaux plus durs
- Revêtement époxy - RAL 3022

The continuous improvements and research required to offer products that are constantly innovative and of top quality led to the development of CARTEC100.
By maintaining the known assembly system and sticking to a policy of constantly innovative production systems, Carcano S.p.A.'s CARTEC100 product line is a solid and budget-friendly alternative to Grade80 products.
Carcano S.p.A. received the "ℋ 92" homologation number from the German organism DGUV-Hannover, regarding the CARTEC100 lifting accessories.
This makes us the fourth company in the world to have this prestigious and specific "third party" certification.
Which makes the CARTEC100 products meet the highest quality standards, as described below:

- No substantial change in shape and dimensioning compared to the Grade80
- +25% lifting capacity than Grade80
- Weight savings due to smaller chain diameter vs. same capacity
- Lower wear due to harder materials
- Epoxy coating - RAL 3022

Die kontinuierlichen Verbesserungen und Forschungen, die erforderlich sind, um ständig innovative und qualitativ hochwertige Produkte anzubieten, führten zur Entwicklung von CARTEC100.
Durch die Beibehaltung des bekannten Montagesystems und das Festhalten an einer Politik der ständig innovativen Produktionssysteme ist die CARTEC100-Produktlinie von Carcano S.p.A. eine solide und budgetfreundliche Alternative zu den Produkten der Klasse 80.
Carcano S.p.A. hat von der DGUV-Hannover die Zulassungsnummer 'ℋ 92" für CARTEC100 Anschlagmittel erhalten.
Damit ist Carcano S.p.A. das vierte Unternehmen auf der Welt, das diese prestigeträchtige und spezifische Zertifizierung von dritter Seite erhalten hat.
Damit erfüllen die CARTEC100 Produkte die höchsten Qualitätsstandards, wie unten beschrieben:

- Keine wesentliche Veränderung der Form und der Abmessungen im Vergleich zu Grade80
- +25% mehr Tragfähigkeit als Grade80
- Gewichtsersparnis durch einen kleineren Kettendurchmesser bei gleicher Tragfähigkeit
- Geringerer Verschleiß durch härtere Materialien
- Epoxidbeschichtung - RAL 3022

REDUCTIEFACTOR - TEMPERATUUR

% verandering in werkbelasting bij toenemende temperatuur.

| | |
|---|---|
| 0% | -40° ≤ T < 200° C |
| -10% | 200° ≤ T < 300° C (*) |
| -25% | -300° ≤ T < 380° C (*) |

(*) Alleen Grade100 componenten

FACTEUR DE RÉDUCTION - TEMPÉRATURE

Variation en % de la charge de travail avec l'augmentation de la température.

| | |
|---|---|
| 0% | -40° ≤ T < 200° C |
| -10% | 200° ≤ T < 300° C (*) |
| -25% | -300° ≤ T < 380° C (*) |

(*)Composants Grade100 seulement

REDUCTION FACTOR - TEMPERATURE

% change in workload with increasing temperature.

| | |
|---|---|
| 0% | -40° ≤ T < 200° C |
| -10% | 200° ≤ T < 300° C(*) |
| -25% | -300° ≤ T < 380° C (*) |

(*)Grade 100 Components only

REDUKTIONSFAKTOR - TEMPERATUR

Veränderung der Tragfähigkeit in % bei steigender Temperatur.

| | |
|---|---|
| 0% | -40° ≤ T < 200° C |
| -10% | 200° ≤ T < 300° C (*) |
| -25% | -300° ≤ T < 380° C (*) |

(*)Nur Bauteile Grade100

CARTEC100 behoudt zich het recht voor om de afmetingen van de producten beschreven in deze catalogus voor de productie en / of commerciële redenen te wijzigen, conform de geldende normen.

CARTEC100 se réserve le droit de modifier les dimensions des produits décrits dans ce catalogue pour des raisons de fabrication et/ou commerciales, conformément aux normes en vigueur.

CARTEC100 reserves the right to modify the dimensions of the products described in this catalog for manufacturing and / or commercial reasons, in accordance with applicable standards.

CARTEC100 behält sich das Recht vor, die Abmessungen der in diesem Katalog beschriebenen Produkte aus fertigungstechnischen und/oder kommerziellen Gründen unter Beachtung der geltenden Normen zu ändern.

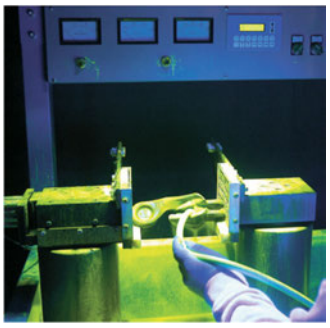

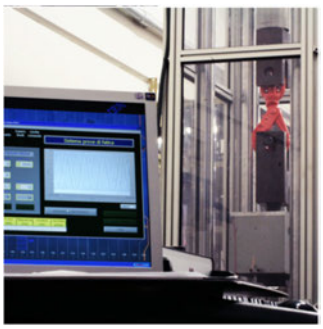

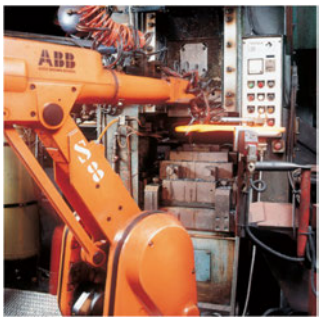




| MAXIMUM WERKBELASTING<br>Symmetrische belasting<br>Volgens. EN 818-2<br>&<br>Gebruiksaanwijzing<br>WLL [t] | CHARGE MAX. D'UTILISATION<br>levage symmétrique<br>Suivant EN 818-2<br>&<br>Mode d'emploi<br>CMU [t] | WORKING LOAD LIMITS<br>to a balanced load<br>Acc. EN 818-2<br>&<br>Safety instructions<br>WLL [t] | TRAGFAHIGKEIT<br>Symm. Belastung<br>Acc. EN 818-2<br>&<br>Gebrauchsanleitung<br>WLL [t] |
|---|---|---|---|

**GRADE 100**

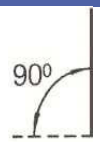


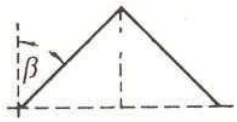


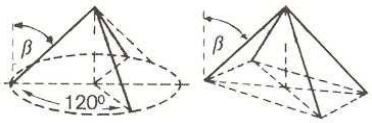


| | Kettingleng<br>1-brin<br>1-leg<br>1-strang | 2-sprong<br>2-brins<br>2-legs<br>2-strang | | 3- en 4 sprong<br>3-et 4 brins<br>3- and 4 legs<br>3- und 4 strang | |
|---|---|---|---|---|---|
| Spreidingshoek<br>Angle d'inclinaison<br>Inclination angle<br>Neigungswinkel | β = 0° | β = 0°- 45° | β = 45°- 60° | β = 0°- 45° | β = 45°- 60° |
| Ø<br>Ketting - Chain<br>Chaine Kette | Belastingsfaktor - Facteur de charge - Load factor - Lastsfaktor<br>(Bf) | | | | |
| mm / inch | 1 | 1.4 | 1 | 2.1 | 1.5 |
| 6 / 1/4 | 1.40 | 2.00 | 1.40 | 3.00 | 2.10 |
| 7 / 9/32 | 1.90 | 2.60 | 1.90 | 4.00 | 2.80 |
| 8 / 5/16 | 2.50 | 3.50 | 2.50 | 5.30 | 3.70 |
| 10 / 3/8 | 4.00 | 5.60 | 4.00 | 8.00 | 6.00 |
| 13 / 1/2 | 6.70 | 9.50 | 6.70 | 14.00 | 10.00 |
| 16 / 5/8 | 10.00 | 14.00 | 10.00 | 21.20 | 15.00 |
| 20 / 3/4 | 16.00 | 22.40 | 16.00 | 33.60 | 24.00 |
| 22 / 7/8 | 19.00 | 26.00 | 19.00 | 40.00 | 28.00 |
| 26 / 1 | 26.50 | 37.10 | 26.50 | 55.60 | 39.70 |
| 32 / 1 1/4 | 40.00 | 56.00 | 40.00 | 85.00 | 60.00 |

Belastingsfactoren - Facteurs des charges - Load factors – Lastfaktoren
(Bf)

| POS 1 | POS 2 | | POS 3 | POS 4 | | POS 5 | | POS 6 | |
|---|---|---|---|---|---|---|---|---|---|
|  | 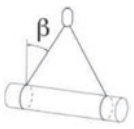 | | 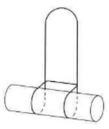 | 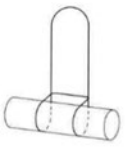 | 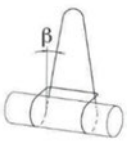 | 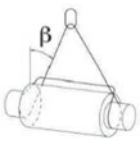 | | 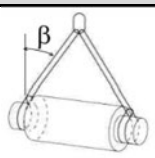 | |
| β=0° | 0°<β≤45° | 45°<β≤60° | | β=0° | 0°<β≤25° | 0°<β≤45° | 45°<β≤60° | 0°<β≤45° | 45°<β≤60° |
| Bf: 0.8 | Bf: 1.12 | Bf: 0.8 | Bf: 1.6 | Bf: 1.6 | Bf: 1.45 | Bf: 1.13 | Bf: 0.8 | Bf: 1.7 | Bf: 1.2 |

Reductiefactoren - Facteurs des Reduction - Reduction factors – Reduktionstfaktoren
(Rf)




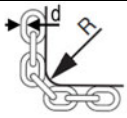


| R > 2x d | R > d | R < d |
|---|---|---|
| Rf: 1 | Rf: 0.7 | Rf: 0.5 |






| Light impact | Medium impact | Strong impact |
|---|---|---|
| Rf: 1 | Rf: 0.7 |  |







| -40°C ⇔ 200°C | > 200°C |
|---|---|
| Rf: 1 |  |

## Ketting EN 818-2 / Chaîne EN 818-2 / Chain EN 818-2 / Kette EN 818-2
Grade 100 — *Temp. Range -40°C/+200°C*

| Nominale maat / Désignation / Nominal size / Nenngrösse mm | inch | WLL / CMU [t] | d mm | t mm | b1 mm | b2 mm | Kg/M | blauw gelakt / Laquées bleu / blue Varnished / blau lackiert — Art.NR / Code Art. / Stock No. / Art.Nr. | € |
|---|---|---|---|---|---|---|---|---|---|
| 6-10 | 1/4 | 1.40 | 6 | 18 | 8.5 | 22.2 | 0.8 | EN8182C06 | |
| 7-10 | 9/32 | 1.90 | 7 | 21 | 9.1 | 25.9 | 1.1 | EN8182C07 | |
| 8-10 | 5/16 | 2.50 | 8 | 24 | 10.4 | 29.6 | 1.5 | EN8182C08 | |
| 10-10 | 3/8 | 4.00 | 10 | 30 | 13 | 37 | 2.3 | EN8182C10 | |
| 13-10 | 1/2 | 6.70 | 13 | 39 | 16.9 | 48.1 | 3.9 | EN8182C13 | |
| 16-10 | 5/8 | 10.00 | 16 | 48 | 20.8 | 59.2 | 5.8 | EN8182C16 | |
| 18-10 | 11/16 | 12.50 | 18 | 54 | 23.4 | 66.6 | 7.4 | EN8182C18 | |
| 20-10 | 3/4 | 16.00 | 20 | 60 | 26 | 74 | 9 | EN8182C20 | |
| 22-10 | 7/8 | 19.00 | 22 | 66 | 28.6 | 81.4 | 11 | EN8182C22 | |
| 26-10 | 1 | 26.50 | 26 | 78 | 33.8 | 96.2 | 15 | EN8182C26 | |
| 32-10 | 1 1/4 | 40.00 | 32 | 96 | 41.6 | 118 | 23 | EN8182C32 | |

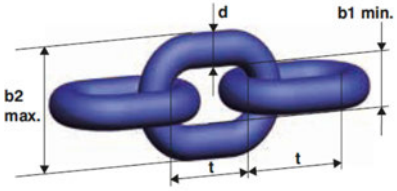


## 1-2 sprongketting / Chain 1-2 brins / 1-2 leg chain slings / 1-2strang Kettengehänge
MLSC Topschalm G100 — MLSC Anneau simples G100 — MLSC Master link G100 — MLSC Aufhängeglied

| Nominale maat / Désignation / Nominal size / Nenngrösse | 1-leng / 1-brin / 1-leg / 1-strang ⊥ | WLL CMU [t] β=0° ⊥ | 2-leng / 2-brin / 2-leg / 2-strang Λ | WLL CMU [t] β=0-45° Λ | L mm | P mm | D mm | KG | Art.NR / Code Art. / Stock No. / Art.Nr. | € |
|---|---|---|---|---|---|---|---|---|---|---|
| 13 | 7 | 1.90 | 6 | 2.00 | 60 | 110 | 13 | 0.3 | MLCCMX13 | |
| 16 | 8 | 2.50 | 7 | 2.65 | 60 | 110 | 16 | 0.5 | MLCCMX16 | |
| 18 | 10 | 4.00 | 8 | 3.55 | 75 | 135 | 18 | 0.8 | MLCCMX18 | |
| 22 | 13 | 6.70 | 10 | 5.60 | 90 | 160 | 22 | 1.6 | MLCCMX22 | |
| 26 | 16 | 10.00 | 13 | 9.50 | 100 | 180 | 26 | 2.3 | MLCCMX26 | |
| 32 | 18 | 12.50 | 16 | 14.00 | 110 | 200 | 32 | 3.9 | MLCCMX32 | |
| 36 | 20 | 16.00 | 18 | 17.50 | 140 | 260 | 36 | 6.4 | MLCCMX36 | |
| 40 | 22 | 19.00 | 20 | 22.40 | 160 | 300 | 40 | 8.9 | MLCCMX40 | |
| 45 | 26 | 26.50 | 22 | 26.50 | 180 | 340 | 45 | 12.8 | MLCCMX45 | |
| 51 | 32 | 40.00 | 26 | 37.10 | 190 | 350 | 51 | 16.55 | MLCCMX51 | |
| 56 | 36 | 50.00 | 32 | 56.00 | 200 | 400 | 56 | 27.01 | MLCCMX57 | |

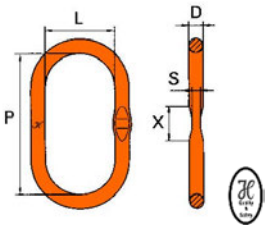


| Identificatieplaatje CE EN 818-4 | Plaquettes de marquage CE EN 818-4 | Identification tag CE EN 818-4 | Anhänger CE EN 818-4 | MLCTIX01 | |
|---|---|---|---|---|---|



## 3-4 sprongketting. / Elingues chaîne 3-4 brins / 3-4 leg chain slings / 3-4 strang Kettengehänge
MLTC Topschalm G100 — MLTC Anneau triples G100 — MLTC Master link G100 — MLTC Aufhängeglied G100

| Nominale maat / Désignation / Nominal size / Nenngrösse | WLL CMU [t] β=0-45° | D mm | P mm | L mm | D1 mm | P1 mm | L1 mm | KG | Art.NR / Code Art. / Stock No. / Art.Nr. | € |
|---|---|---|---|---|---|---|---|---|---|---|
| 6-10 | 3.00 | 18 | 135 | 75 | 13 | 54 | 25 | 1.31 | MLTCMCX67 | |
| 7-10 | 4.00 | 18 | 135 | 75 | 13 | 54 | 25 | 1.31 | MLTCMCX67 | |
| 8-10 | 5.30 | 22 | 160 | 90 | 16 | 70 | 34 | 2.32 | MLTCMCX08 | |
| 10-10 | 8.00 | 26 | 180 | 100 | 18 | 85 | 40 | 3.52 | MLTCMCX10 | |
| 13-10 | 14.00 | 32 | 200 | 110 | 22 | 115 | 50 | 6.26 | MLTCMCX13 | |
| 16-10 | 21.20 | 36 | 260 | 140 | 26 | 140 | 65 | 9.56 | MLTCMCX16 | |
| 20-10 | 33.60 | 50 | 350 | 190 | 32 | 150 | 70 | 22.65 | MLTCMCX20 | |
| 22-10 | 40.00 | 50 | 350 | 190 | 36 | 170 | 75 | 25.19 | MLTCMCX22 | |
| 26-10 | 55.65 | 56 | 400 | 200 | 45 | 170 | 80 | 41.31 | MLTCPVW26 | |
| 32-10 | 85.00 | 70 | 460 | 250 | 50 | 200 | 100 | 66.60 | MLTCPVW32 | |

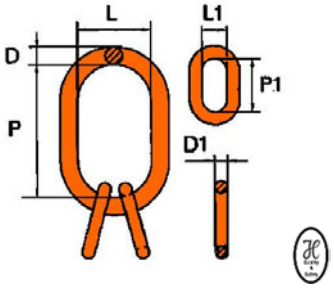


| Identificatieplaatje CE EN 818-4 / 1S | Plaquettes de marquage CE EN 818-4/ 1B | Identification. tag CE EN 818-4 / 1L | Anhänger CE EN 818-4 – 1S | MLCTIX01 | |
|---|---|---|---|---|---|



| Identificatieplaatje CE EN 818-4 / 2,3,4S | Plaquettes de marquage CE EN 818-4/ 2,3,4B | Identification. tag CE EN 818-4 / 2,3,4L | Anhänger CE EN 818-4 – 2,3,4S | MLCTIX02 | |
|---|---|---|---|---|---|



| Topschalm CPX – 1 leng-G100<br>Type MLSCPX | | | Maillon de tête CPX - 1 brin-G100<br>Type CPX1 | | | | | Masterlink CPX - 1 legG100<br>Type CPX1 | | Kettengehänge CPX -1strang-G100<br>Type CPX1 |
|---|---|---|---|---|---|---|---|---|---|---|
| Nominale maat<br>Désignation<br>Nominal size<br>Nenngrösse | WLL -CMU<br>EN818-4<br>DIN5688-3<br>[t] | | ØD<br>mm | P<br>mm | L<br>mm | T<br>mm | KG | Art.NR<br>Code Art.<br>Stock No.<br>Art.Nr. | € | 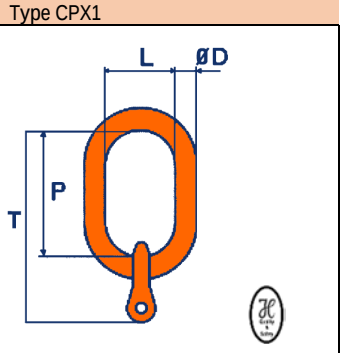 |
| 6-10 | 1.40 | | 13 | 110 | 60 | 140 | 0.58 | MLSCPX106 | | |
| 7-10 | 1.90 | | 16 | 110 | 60 | 151 | 0.88 | MLSCPX107 | | |
| 8-10 | 2.50 | | 16 | 110 | 60 | 151 | 0.88 | MLSCPX108 | | |
| 10-10 | 4.00 | | 18 | 135 | 75 | 185 | 1.35 | MLSCPX110 | | |
| 13-10 | 6.70 | | 22 | 160 | 90 | 223 | 2.40 | MLSCPX113 | | |
| 16-10 | 10.00 | | 26 | 180 | 100 | 257 | 4.00 | MLSCPX116 | | |

| Topschalm CPX – 1 leng-G100<br>Type ML2CPX | | | Maillon de tête CPX - 1 brin-G100<br>Type CPX2 | | | | | Masterlink CPX - 1 legG100<br>Type CPX2 | | Kettengehänge CPX -1strang-G100<br>Type CPX2 |
|---|---|---|---|---|---|---|---|---|---|---|
| Nominale maat<br>Désignation<br>Nominal size<br>Nenngrösse | WLL -CMU<br>EN818-4<br>DIN5688-3<br>[t] | | ØD<br>mm | P<br>mm | L<br>mm | T<br>mm | KG | Art.NR<br>Code Art.<br>Stock No.<br>Art.Nr. | € | 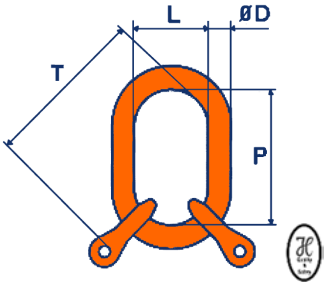 |
| 6-10 | 3.00 | 1.40 | 13 | 110 | 60 | 140 | 0.70 | MLDCPX206 | | |
| 7-10 | 2.65 | 1.90 | 18 | 135 | 75 | 176 | 1.40 | MLDCPX207 | | |
| 8-10 | 3.55 | 2.50 | 18 | 135 | 75 | 176 | 1.40 | MLDCPX208 | | |
| 10-10 | 5.60 | 4.00 | 22 | 160 | 90 | 210 | 2.45 | MLDCPX210 | | |
| 13-10 | 9.50 | 6.70 | 26 | 180 | 100 | 243 | 4.02 | MLDCPX213 | | |
| 16-10 | 14.00 | 10.00 | 32 | 200 | 110 | 277 | 7.05 | MLDCPX216 | | |

| Topschalm CPX – 1 leng-G100<br>Type ML4CPX | | | Maillon de tête CPX - 1 brin-G100<br>Type CPX4 | | | | | | Masterlink CPX - 1 legG100<br>Type CPX4 | | Kettengehänge CPX -1strang-G100<br>Type CPX4 |
|---|---|---|---|---|---|---|---|---|---|---|---|
| Nominale maat<br>Désignation<br>Nominal size<br>Nenngrösse | WLL -CMU<br>EN818-4<br>DIN5688-3<br>[t] | | ØD<br>mm | ØD1<br>mm | P<br>mm | L<br>mm | T<br>mm | KG | Art.NR<br>Code Art.<br>Stock No.<br>Art.Nr. | € | 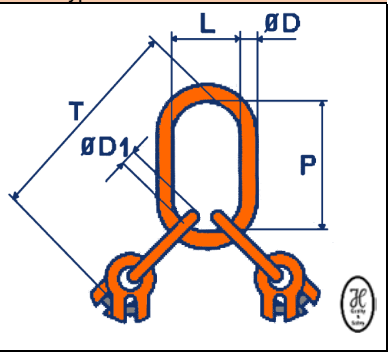 |
| 6-10 | 3.00 | 2.12 | 18 | 13 | 135 | 75 | 219 | 1.65 | MLQCPX406 | | |
| 7-10 | 4.00 | 2.80 | 22 | 16 | 160 | 90 | 271 | 3.20 | MLQCPX407 | | |
| 8-10 | 5.30 | 3.75 | 22 | 16 | 160 | 90 | 271 | 3.20 | MLQCPX408 | | |
| 10-10 | 8.00 | 6.00 | 26 | 18 | 180 | 100 | 315 | 5.30 | MLQCPX410 | | |
| 13-10 | 14.00 | 10.00 | 32 | 22 | 200 | 110 | 378 | 9.40 | MLQCPX413 | | |
| 16-10 | 21.20 | 15.00 | 36 | 26 | 260 | 140 | 477 | 16.30 | MLQCPX416 | | |

| Topschalm CPX – 1 leng-G100<br>Type MLS1CDFX | | | Maillon de tête CPX - 1 brin-G100<br>Type MLS1CDFX | | | | | Masterlink CPX - 1 legG100<br>Type MLS1CDFX | | Kettengehänge CPX -1strang-G100<br>Type MLS1CDFX |
|---|---|---|---|---|---|---|---|---|---|---|
| Nominale maat<br>Désignation<br>Nominal size<br>Nenngrösse | WLL -CMU<br>EN818-4<br>DIN5688-3<br>[t] | | ØD<br>mm | P<br>mm | L<br>mm | R<br>mm | KG | Art.NR<br>Code Art.<br>Stock No.<br>Art.Nr. | € | |
| 6-10 | 1.40 | | 13 | 110 | 60 | 195 | 0.60 | MLS1CDFX06 | | |
| 7-10 | 1.90 | | 13 | 110 | 60 | 232 | 1.00 | MLS1CDFX07 | | |
| 8-10 | 2.50 | | 16 | 110 | 60 | 232 | 1.20 | MLS1CDFX08 | | |
| 10-10 | 4.00 | | 18 | 135 | 75 | 295 | 2.00 | MLS1CDFX10 | | |
| 13-10 | 6.70 | | 22 | 160 | 90 | 364 | 4.30 | MLS1CDFX13 | | |
| 16-10 | 10.00 | | 26 | 180 | 100 | 412 | 7.30 | MLS1CDFX16 | | |

| Topschalm CPX – 1 leng-G100<br>Type MLS2CDFX | | | Maillon de tête CPX - 1 brin-G100<br>Type MLS2CDFX | | | | | Masterlink CPX - 1 legG100<br>Type MLS2CDFX | | Kettengehänge CPX -1strang-G100<br>Type MLS2CDFX |
|---|---|---|---|---|---|---|---|---|---|---|
| Nominale maat<br>Désignation<br>Nominal size<br>Nenngrösse | WLL -CMU<br>EN818-4<br>DIN5688-3<br>[t] | | ØD<br>mm | P<br>mm | L<br>mm | R<br>mm | KG | Art.NR<br>Code Art.<br>Stock No.<br>Art.Nr. | € | |
| 6-10 | 3.00 | 1.40 | 13 | 110 | 60 | 195 | 0.95 | MLS2CDFX06 | | |
| 7-10 | 2.65 | 1.90 | 18 | 135 | 75 | 230 | 1.80 | MLS2CDFX07 | | |
| 8-10 | 3.55 | 2.50 | 18 | 135 | 75 | 255 | 2.20 | MLS2CDFX08 | | |
| 10-10 | 5.60 | 4.00 | 22 | 160 | 90 | 320 | 4.00 | MLS2CDFX10 | | |
| 13-10 | 9.50 | 6.70 | 26 | 180 | 100 | 382 | 7.70 | MLS2CDFX13 | | |
| 16-10 | 14.00 | 10.00 | 32 | 200 | 110 | 430 | 13.50 | MLS2CDFX16 | | |

| Topschalm CPX – 1 leng-G100<br>Type MLT4CDFX | | | Maillon de tête CPX - 1 brin-G100<br>Type MLT4CDFX | | | | | | Masterlink CPX - 1 legG100<br>Type MLT4CDFX | | Kettengehänge CPX -1strang-G100<br>Type MLT4CDFX |
|---|---|---|---|---|---|---|---|---|---|---|---|
| Nominale maat<br>Désignation<br>Nominal size<br>Nenngrösse | WLL -CMU<br>EN818-4<br>DIN5688-3<br>[t] | | ØD<br>mm | ØD1<br>mm | P<br>mm | L<br>mm | R<br>mm | KG | Art.NR<br>Code Art.<br>Stock No.<br>Art.Nr. | € | |
| 6-10 | 3.00 | 2.12 | 18 | 13 | 135 | 75 | 270 | 2.50 | MLT4CDFX06 | | |
| 7-10 | 4.00 | 2.80 | 22 | 16 | 160 | 90 | 350 | 4.70 | MLT4CDFX07 | | |
| 8-10 | 5.30 | 3.75 | 22 | 16 | 160 | 90 | 350 | 4.70 | MLT4CDFX08 | | |
| 10-10 | 8.00 | 6.00 | 26 | 18 | 180 | 100 | 425 | 8.70 | MLT4CDFX10 | | |
| 13-10 | 14.00 | 10.00 | 32 | 22 | 200 | 110 | 520 | 17.00 | MLT4CDFX13 | | |
| 16-10 | 21.20 | 15.00 | 36 | 26 | 260 | 140 | 635 | 29.00 | MLT4CDFX16 | | |

| Speciale Topschalm -G100<br>voor kraanhaak DIN 15401 | Anneau simples spécial – G100<br>pour crochets DIN 15401 | Special Master link – G100<br>for Hooks DIN 15401 | Aufhängeglied -.G100<br>für Haken DIN 15401 |
|---|---|---|---|
| 1 leng - 1 brin -1 Leg - Einstrang | | Multi-leng - Multi-brin - Multi-leg - Mehrstrang | |
| 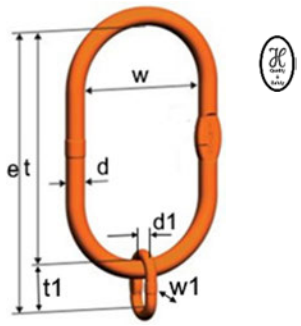 | | 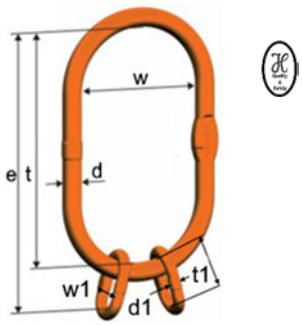 | |

| Topschalm 3XL – G100<br>Type ML25C<br>voor kraanhaak DIN 15401 NR 25 | | | Anneau simples 3XL – G100<br>Type ML25C<br>Pour crochets DIN 15401 NR 25 | | Master link 3XL – G100<br>Type ML25C<br>For Hooks DIN 15401 NR 25 | | | | | | | Aufhängeglied 3XL – G100<br>Type ML25C<br>für Haken DIN 15401 NR 25 | |
|---|---|---|---|---|---|---|---|---|---|---|---|---|---|
| Nominale maat<br>Désignation<br>Nominal size<br>Nenngrösse | WLL<br>CMU<br>[t] | 1-leng<br>1-brin<br>1-leg<br>1-strang | 2-leng<br>2-brin<br>2-leg<br>2-strang | 3-4-leng<br>3-4-brin<br>3-4-leg<br>3-4-strang | d<br>mm | d1<br>mm | t<br>mm | t1<br>mm | w<br>mm | W1<br>mm | Kg | Art.NR<br>Code Art.<br>Stock No.<br>Art.Nr. | € |
| ML25C1-23/13 | 2.50 | 6/7/8-10 | | | 23 | 13 | 340 | 54 | 180 | 25 | 3.37 | 3XL25C108 | |
| ML25C2-23/13 | 3.55 | | 6/7/8-10 | 6-10 | 23 | 13 | 340 | 54 | 180 | 25 | 3.54 | 3XL25C208/406 | |
| ML25C1-27/17 | 4.00 | 10-10 | | | 27 | 17 | 340 | 70 | 180 | 34 | 4.76 | 3XL25C110 | |
| ML25C2-26/17 | 5.60 | | 10-10 | 7/8-10 | 27 | 17 | 340 | 70 | 180 | 34 | 5.12 | 3XL25C210/408 | |
| ML25C1-27 | 6.70 | 13-10 | | | 27 | | 340 | | 180 | | 4.40 | 3XL25C113 | |
| ML25C2-33/20 | 9.50 | | 13-10 | 10-10 | 33 | 20 | 340 | 85 | 180 | 40 | 7.81 | 3XL25C213/410 | |
| ML25C1-33 | 10.00 | 16-10 | | | 33 | | 340 | | 180 | | 6.70 | 3XL25C116 | |
| ML25C2-40/23 | 14.00 | | 16-10 | 13-10 | 40 | 23 | 340 | 115 | 180 | 50 | 7.81 | 3XL25C216/413 | |
| ML25C1-40 | 19.00 | 19/20/22-10 | | | 40 | | 340 | | 180 | | 10.0 | 3XL25C122 | |
| ML25C2-40/27 | 21.20 | | 19-10 | 16-10 | 40 | 27 | 340 | 140 | 180 | 60 | 13.84 | 3XL25C219/416 | |

| Topschalm 4XL – G100<br>Type ML40C<br>voor kraanhaak DIN 15401 NR 40 | | | Anneau simples 4XL – G100<br>Type ML40C<br>Pour crochets DIN 15401 NR 40 | | Master link 4XL – G100<br>Type ML40C<br>For Hooks DIN 15401 NR 40 | | | | | | | Aufhängeglied 4XL – G100<br>Type ML40C<br>für Haken DIN 15401 NR 40 | |
|---|---|---|---|---|---|---|---|---|---|---|---|---|---|
| Nominale maat<br>Désignation<br>Nominal size<br>Nenngrösse | WLL<br>CMU<br>[t] | 1-leng<br>1-brin<br>1-leg<br>1-strang | 2-leng<br>2-brin<br>2-leg<br>2-strang | 3-4-leng<br>3-4-brin<br>3-4-leg<br>3-4-strang | d<br>mm | d1<br>mm | t<br>mm | t1<br>mm | w<br>mm | W1<br>mm | Kg | Art.NR<br>Code Art.<br>Stock No.<br>Art.Nr. | € |
| ML40C2-30/20 | 5.60 | | 10-10 | 8-10 | 30 | 20 | 430 | 85 | 220 | 40 | 8.16 | 4XL40C210/408 | |
| ML40C2-33/20 | 9.50 | | 13-10 | 10-10 | 33 | 20 | 340 | 85 | 220 | 40 | 9.66 | 4XL40C213/410 | |
| ML40C2-36/23 | 14.00 | | 16-10 | 13-10 | 36 | 23 | 340 | 115 | 220 | 50 | 12.32 | 4XL40C216/413 | |
| ML40C2-45/27 | 21.20 | | 19-10 | 16-10 | 45 | 27 | 340 | 115 | 220 | 65 | 19.54 | 4XL40C219/416 | |

| Topschalm 5XL – G100<br>Type ML50C<br>voor kraanhaak DIN 15401 NR 50 | | | Anneau simples 5XL – G100<br>Type ML50C<br>Pour crochets DIN 15401 NR 50 | | Master link 5XL – G100<br>Type ML50C<br>For Hooks DIN 15401 NR 50 | | | | | | | Aufhängeglied 5XL – G100<br>Type ML50C<br>für Haken DIN 15401 NR 50 | |
|---|---|---|---|---|---|---|---|---|---|---|---|---|---|
| Nominale maat<br>Désignation<br>Nominal size<br>Nenngrösse | WLL<br>CMU<br>[t] | 1-leng<br>1-brin<br>1-leg<br>1-strang | 2-leng<br>2-brin<br>2-leg<br>2-strang | 3-4-leng<br>3-4-brin<br>3-4-leg<br>3-4-strang | d<br>mm | d1<br>mm | t<br>mm | t1<br>mm | w<br>mm | W1<br>mm | Kg | Art.NR<br>Code Art.<br>Stock No.<br>Art.Nr. | € |
| ML50C1-33/20 | 10.00 | 10/13-10 | | | 33 | 20 | 500 | 85 | 250 | 40 | 10.0 | 5XL50C113 | |
| ML50C2-33/20 | 9.50 | | 10/13-10 | 10-10 | 33 | 20 | 500 | 115 | 250 | 40 | 10.68 | 5XL50C213/410 | |
| ML50C1-33 | 10.00 | 16-10 | | | 33 | | 500 | 70 | 250 | 34 | 4.76 | 5XL50C116 | |
| ML50C2-40/23 | 5.60 | | 16-10 | 13-10 | 40 | 23 | 340 | 140 | 250 | 50 | 15.44 | 5XL50C216/413 | |
| ML50C1-40 | 6.70 | 19-10 | | | 40 | | 460 | | 250 | | 4.40 | 5XL50C119 | |
| ML50C2-45/27 | 9.50 | | 19/20-10 | 16-10 | 45 | 27 | 340 | 150 | 250 | 65 | 21.64 | 5XL50C220/416 | |
| ML50C1-45 | 10.00 | 22-10 | | | 45 | | 500 | | 250 | | 6.70 | 5XL50C122 | |
| ML50C2-50/33 | 14.00 | | 22-10 | 19/20-10 | 50 | 33 | 340 | 150 | 250 | 70 | 27.30 | 5XL50C222/420 | |
| ML50C1-50 | 19.00 | 26-10 | | | 50 | | 460 | | 250 | | 10.00 | 5XL50C126 | |
| ML50C2-56/33 | 21.20 | | 26-10 | 22-10 | 56 | 33 | 340 | 150 | 250 | 70 | 34.92 | 5XL50C226/422 | |
| ML50C2-56 | 40.00 | 32-10 | | | 56 | | 460 | | 250 | | | 5XL50C132 | |

| Topschalm 6XL – G100<br>Type ML100C<br>voor kraanhaak DIN 15401 NR 100 | | | Anneau simples 6XL – G100<br>Type ML100C<br>Pour crochets DIN 15401 NR 100 | | Master link 6XL – G100<br>Type ML100C<br>For Hooks DIN 15401 NR 100 | | | | | | | Aufhängeglied 6XL – G100<br>Type ML100C<br>für Haken DIN 15401 NR 100 | |
|---|---|---|---|---|---|---|---|---|---|---|---|---|---|
| Nominale maat<br>Désignation<br>Nominal size<br>Nenngrösse | WLL<br>CMU<br>[t] | 1-leng<br>1-brin<br>1-leg<br>1-strang | 2-leng<br>2-brin<br>2-leg<br>2-strang | 3-4-leng<br>3-4-brin<br>3-4-leg<br>3-4-strang | d<br>mm | d1<br>mm | t<br>mm | t1<br>mm | w<br>mm | W1<br>mm | Kg | Art.NR<br>Code Art.<br>Stock No.<br>Art.Nr. | € |
| ML100C1-60 | 40.00 | 32-10 | | | 60 | | 800 | | 320 | | 48.00 | 6XL100C132 | |
| ML100C2-40/27 | 40.00 | | 26-10 | 22-10 | 60 | 13 | 800 | 150 | 320 | 70 | 56.24 | 6XL100C226/422 | |

| Koppelingsbeugel -G100<br>Type KVC | | | | | | | | | | | | Attache á chape-G100<br>Type KVC | Clevis Attachments-G100<br>Type KVC | Gabelverbinder-G100<br>Type KVC |
|---|---|---|---|---|---|---|---|---|---|---|---|---|---|---|
| Nominale maat<br>Désignation<br>Nominal size<br>Nenngrösse | WLL<br>CMU<br>[t] | A<br>mm | B<br>mm | C<br>mm | F<br>mm | G<br>mm | H<br>mm | PxL<br>mm | KG | Art.NR<br>Code Art.<br>Stock No.<br>Art.Nr. | € | | | |
| 6-10 | 1.40 | 7.5 | 32 | 18 | 32 | 9.8 | 11 | 7.5x21 | 0.15 | KVCCPAX06 | | | | |
| 7-10 | 1.90 | 9.5 | 40 | 24 | 42.5 | 12 | 15 | 9x26 | 0.28 | KVCCPAX07 | | | | |
| 8-10 | 2.50 | 9.5 | 40 | 24 | 42.5 | 12 | 15 | 10x26 | 0.28 | KVCCPAX08 | | | | |
| 10-10 | 4.00 | 12 | 48 | 30 | 51.5 | 15.7 | 18 | 13x31.5 | 0.5 | KVCCPAX10 | | | | |
| 13-10 | 6.70 | 15.5 | 54 | 36 | 63.5 | 19 | 21.5 | 16x42 | 0.9 | KVCCPAX13 | | | | |
| 16-10 | 10.00 | 18 | 70 | 47 | 79.5 | 22.7 | 27.5 | 21x51.5 | 1.8 | KVCCPAX16 | | | | |

| Verbindingsschalm-G100<br>Type VGXC | | | | | | | | | | | Maillon de jonction-G100<br>Type VGXC | Connecting Link-G100<br>Type VGXC | Verbindungsglied-G100<br>Type VGXC |
|---|---|---|---|---|---|---|---|---|---|---|---|---|---|
| Nominale maat<br>Désignation<br>Nominal size<br>Nenngrösse | WLL<br>CMU<br>[t] | A<br>mm | C<br>mm | O<br>mm | R<br>mm | P<br>mm | S<br>mm | KG | Art.NR<br>Code Art.<br>Stock No.<br>Art.Nr. | € | | | |
| 6-10 | 1.40 | 14 | 18 | 18 | 45 | 8 | 7.5 | 0.07 | VGCCLX06 | | | | |
| 7-10 | 1.90 | 17.8 | 20 | 19 | 50 | 10.2 | 9 | 0.14 | VGCCLX07 | | | | |
| 8-10 | 2.50 | 19 | 25 | 23 | 62 | 11 | 10 | 0.20 | VGCCLX08 | | | | |
| 10-10 | 4.00 | 23 | 30 | 27 | 72 | 12 | 12 | 0.35 | VGCCLX10 | | | | |
| 13-10 | 6.70 | 28 | 36 | 34 | 87 | 19 | 16.7 | 0.74 | VGCCLX13 | | | | |
| 16-10 | 10.00 | 34 | 40 | 39 | 105 | 20 | 20.6 | 1.16 | VGCCLX16 | | | | |
| 20-10 | 16.00 | 42 | 46 | 46 | 113 | 29 | 25 | 2.05 | VGCCLX20 | | | | |
| 22-10 | 19.00 | 49 | 55 | 58 | 133 | 30 | 28 | 3.10 | VGCCLX22 | | | | |
| 26-10 | 26.50 | 57 | 85 | 83 | 192 | 40 | 30 | 6.80 | VGCCLX26 | | | | |
| 32-10 | 40.00 | 80 | 75 | 80 | 206 | 47 | 35 | 11.2 | VGCCLX32 | | | | |



| Veiligheidshaak met gaffel–G100<br>Type LSGC | | | | Crochet de securité à chape-G100<br>Type LSGC | | | | | | Self Locking clevis hook–G100<br>Type LSGC | | Sicherheitslasthaak–G100<br>Type LSGC |
|---|---|---|---|---|---|---|---|---|---|---|---|---|
| Nominale maat<br>Désignation<br>Nominal size<br>Nenngrösse | WLL<br>CMU<br>[t] | A<br>mm | B<br>mm | C<br>mm | G<br>mm | H<br>mm | R<br>mm | T<br>mm | KG | Art.NR<br>Code Art.<br>Stock No.<br>Art.Nr. | € | |
| 6-10 | 1.40 | 28 | 7 | 8 | 16 | 21 | 94 | 35 | 0.50 | LSGCCRFX06 | | |
| 7-10 | 1.90 | 34 | 9 | 10 | 20 | 26 | 123 | 43 | 0.95 | LSGCCRFX07 | | |
| 8-10 | 2.50 | 34 | 9 | 10 | 20 | 26 | 123 | 43 | 0.95 | LSGCCRFX08 | | |
| 10-10 | 4.00 | 45 | 12 | 14 | 25 | 30 | 143 | 56 | 1.60 | LSGCCRFX10 | | |
| 13-10 | 6.70 | 51 | 15 | 17 | 35 | 40 | 180 | 69 | 3.20 | LSGCCRFX13 | | |
| 16-10 | 10.00 | 60 | 19 | 19 | 36 | 50 | 215 | 80 | 5.95 | LSGCCRFX16 | | |
| 20-10 | 16.00 | 70 | 23 | 26 | 60 | 67 | 253 | 90 | 9.8 | LSGCCRFX20 | | |
| 22-10 | 19.00 | 82 | 26 | 32 | 62 | 70 | 287 | 100 | 14.4 | LSGCCRFX22 | | |
| 26-10 | 26.50 | 100 | 30 | 37 | 61 | 79 | 338 | 110 | 21.3 | LSGCKLHW26 | | |

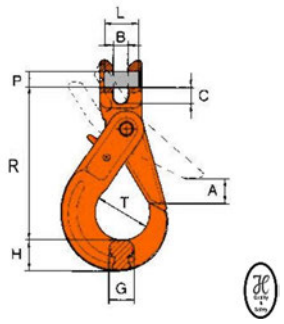


| Veiligheidshaak met oog–G100<br>Type LSOC | | | | Crochet de securité à œil–G100<br>Type LSOC | | | | | | Self Locking eyehook–G100<br>Type LSOC | | Sicherheitslasthaak mit Öse–G100<br>Type LSOC |
|---|---|---|---|---|---|---|---|---|---|---|---|---|
| Nominale maat<br>Désignation<br>Nominal size<br>Nenngrösse | WLL<br>CMU<br>[t] | A<br>mm | D<br>mm | G<br>mm | H<br>mm | O<br>mm | R<br>mm | T<br>mm | KG | Art.NR<br>Code Art.<br>Stock No.<br>Art.Nr. | € | |
| 6-10 | 1.40 | 28 | 11 | 16 | 21 | 21 | 109 | 35 | 0.51 | LSOCCROX06 | | |
| 7/8-10 | 2.50 | 34 | 12 | 20 | 26 | 25 | 135 | 43 | 0.94 | LSOCCROX08 | | |
| 10-10 | 4.00 | 45 | 16 | 25 | 30 | 33 | 168 | 56 | 1.63 | LSOCCROX10 | | |
| 13-10 | 6.70 | 51 | 20 | 35 | 40 | 40 | 205 | 69 | 3.25 | LSOCCROX13 | | |
| 16-10 | 10.00 | 60 | 27 | 36 | 50 | 50 | 251 | 80 | 6.05 | LSOCCROX16 | | |
| 20-10 | 16.00 | 70 | 30 | 60 | 67 | 60 | 290 | 90 | 9.8 | LSOCCROX20 | | |
| 22-10 | 19.00 | 80 | 32 | 62 | 70 | 70 | 322 | 100 | 14.4 | LSOCCROX22 | | |
| 26-10 | 26.50 | 100 | 42 | 61 | 79 | 82 | 383 | 100 | 20.0 | LSOCLHW26 | | |
| 32-10 | 40.00 | 120 | 45 | 80 | 102 | 82 | 425 | 120 | 32.4 | LSOCLHW32 | | |

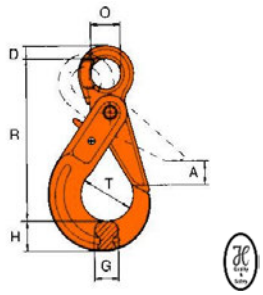


| Veiligheidshaak met wartel-G100<br>Type LSWC | | | | Crochet de securité à emerilllon-G100<br>Type LSWC | | | | | | Swivel Self Locking eyehook-G100<br>Type LSWC | | Sicherheitslasthaak m. Öse-drehbar-<br>Type LSWC |
|---|---|---|---|---|---|---|---|---|---|---|---|---|
| Nominale maat<br>Désignation<br>Nominal size<br>Nenngrösse | WLL<br>CMU<br>[t] | R<br>mm | A<br>mm | B<br>mm | O<br>mm | D<br>mm | G<br>mm | H<br>mm | KG<br>mm | Art.NR<br>Code Art.<br>Stock No.<br>Art.Nr. | € | |
| 6-10 | 1.40 | 158 | 28 | 23 | 36 | 13 | 16 | 21 | 0.6 | LSWCCRG06 | | |
| 7/8-10 | 2.50 | 182 | 34 | 27 | 36 | 13 | 20 | 26 | 1.1 | LSWCCRG08 | | |
| 10-10 | 4.00 | 217 | 45 | 35 | 42 | 16 | 25 | 30 | 2.0 | LSWCCRG10 | | |
| 13-10 | 6.70 | 271 | 54 | 43 | 50 | 21 | 35 | 40 | 4.0 | LSWCCRG13 | | |
| 16-10 | 10.00 | 320 | 62 | 56 | 62 | 24 | 38 | 50 | 6.8 | LSWCCRG16 | | |

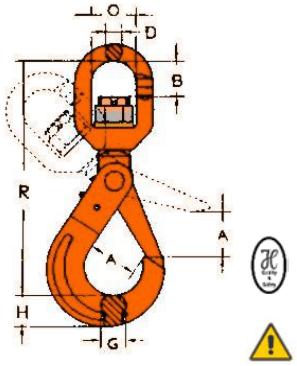


Only positioning – No rotation under load

| Veiligheidshaak met wartel-G100<br>Met kogellager<br>Type LSNC | | | | Crochet de securité á emerilllon-G100<br>Avec roulement<br>Type LSNC | | | | | | Swivel Self Locking eyehook-G100<br>With Ball Bearing<br>Type LSNC | | Sicherheitslasthaak-Öse-drehbar-G100<br>Mit kügellager<br>Type LSNC |
|---|---|---|---|---|---|---|---|---|---|---|---|---|
| Nominale maat<br>Désignation<br>Nominal size<br>Nenngrösse | WLL<br>CMU<br>[t] | R<br>mm | A<br>mm | B<br>mm | O<br>mm | D<br>mm | G<br>mm | H<br>mm | KG<br>mm | Art.NR<br>Code Art.<br>Stock No.<br>Art.Nr. | € | |
| 6-10 | 1.40 | 149 | 28 | 22 | 32 | 12 | 15 | 19 | 0.7 | LSNC027N06 | | |
| 7/8-10 | 2.50 | 186 | 34 | 29 | 36 | 13 | 20 | 24 | 1.3 | LSNC027N08 | | |
| 10-10 | 4.00 | 218 | 44 | 34 | 41 | 16 | 26 | 30 | 2.0 | LSNC027N10 | | |
| 13-10 | 6.70 | 276 | 51 | 43 | 46 | 21 | 30 | 39 | 4.2 | LSNC027N13 | | |
| 16-10 | 10.00 | 329 | 60 | 50 | 61 | 23 | 36 | 49 | 7.3 | LSNC027N16 | | |
| 20-10 | 16.00 | 387 | 70 | 82 | 74 | 25 | 53 | 65 | 12.6 | LSNC027N20 | | |
| 22-10 | 19.00 | 457 | 80 | 95 | 97 | 33 | 49 | 63 | 19.4 | LSNC027N22 | | |
| 26-10 | 26.50 | 535 | 99 | 115 | 123 | 42 | 56 | 69 | 32.9 | LSNC027N26 | | |

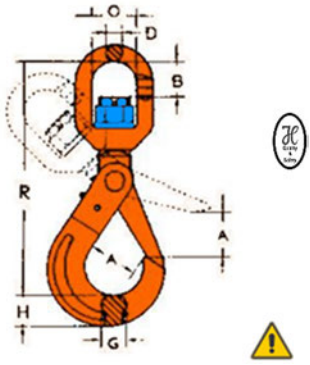


360°Rotation under load

## Haak met gaffel-G100 / Crochet à chape-G100 / Clevis hook-G100 / Lasthaak-G100
Type SGXC / Type SGXC / Type SGXC / Type SGXC

| Nominale maat Désignation Nominal size Nenngrösse | WLL CMU [t] | A mm | A1 mm | B mm | C mm | G mm | H mm | R mm | KG | Art.NR Code Art. Stock No. Art.Nr. | € |
|---|---|---|---|---|---|---|---|---|---|---|---|
| 6-10 | 1.40 | 26 | 19 | 7.2 | 8 | 15 | 20 | 69 | 0.25 | SGXCCBX06 | |
| 7-10 | 1.90 | 34 | 26 | 9.5 | 10 | 19 | 28 | 95 | 0.55 | SGXCCBX07 | |
| 8-10 | 2.50 | 34 | 26 | 9.5 | 10 | 19 | 28 | 95 | 0.50 | SGXCCBX08 | |
| 10-10 | 4.00 | 40 | 31 | 12 | 13.5 | 25 | 33 | 110 | 1.00 | SGXCCBX10 | |
| 13-10 | 6.70 | 51 | 40 | 15 | 17 | 30 | 40 | 136 | 1.70 | SGXCCBX13 | |
| 16-10 | 10.00 | 56 | 45 | 18 | 22 | 37 | 48 | 155 | 3.20 | SGXCCBX16 | |
| 20-10 | 16.00 | 60 | 53 | 23 | 25 | 51 | 52 | 185 | 5.00 | SGXCCBX20 | |
| 22-10 | 19.00 | 70 | 62 | 25 | 29 | 50 | 63 | 210 | 12.3 | SGXCCBX22 | |

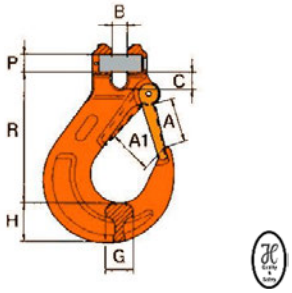


## Haak met oog-G100 / Crochet à œil-G100 / Eye hook -G100 / Lasthaak mit ose-G100
Type SOXC / Type SOXC / Type SOXC / Type SOXC

| Nominale maat Désignation Nominal size Nenngrösse | WLL CMU [t] | A mm | A1 mm | D mm | G mm | H mm | O mm | R mm | KG | Art.NR Code Art. Stock No. Art.Nr. | € |
|---|---|---|---|---|---|---|---|---|---|---|---|
| 6-10 | 1.40 | 26 | 19 | 10 | 16 | 20 | 20.5 | 81 | 0.25 | SOXCCAX06 | |
| 7/8-10 | 2.50 | 33 | 26 | 11 | 19 | 29 | 25 | 101 | 0.50 | SOXCCAX08 | |
| 10-10 | 4.00 | 40 | 31 | 16 | 26 | 33 | 34 | 131 | 0.97 | SOXCCAX10 | |
| 13-10 | 6.70 | 51 | 40 | 19 | 33 | 42 | 43 | 159 | 1.9 | SOXCCAX13 | |
| 16-10 | 10.00 | 56 | 45 | 24.5 | 40 | 50 | 50 | 183 | 3.30 | SOXCCAX16 | |
| 20-10 | 16.00 | 60 | 52 | 27 | 48 | 53 | 55 | 203 | 4.50 | SOXCCAX20 | |
| 22-10 | 19.00 | 70 | 62 | 29 | 50 | 60 | 60 | 224 | 7.10 | SOXCCAX22 | |
| 26-10 | 26.50 | 77 | 73 | 35 | 60 | 75 | 70 | 257 | 12 | SOXCCAX26 | |
| 32-10 | 40.00 | 102 | 94 | 42 | 73 | 91 | 84 | 335 | 27.5 | SOXCCAX32 | |

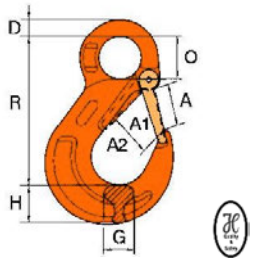


## Containerhaak/gieterij met oog–G100 / Crochet de fonderie à œil–G100 / Foundry eyehook–G100 / Weitmaulhaak mit Öse–G100
Type COXC / Type COXC / Type COXC / Type COXC

| Nominale maat Désignation Nominal size Nenngrösse | WLL CMU [t] | A mm | D mm | G mm | H mm | O mm | R mm | KG | Art.NR Code Art. Stock No. Art.Nr. | € |
|---|---|---|---|---|---|---|---|---|---|---|
| 6-10 | 1.40 | 53.5 | 11.5 | 22 | 26 | 15 | 102.5 | 0.6 | COXCCYX06 | |
| 7/8-10 | 2.50 | 62 | 13.5 | 25 | 29 | 24 | 128 | 0.9 | COXCCYX08 | |
| 10-10 | 4.00 | 76 | 14 | 23 | 30 | 32 | 150 | 1.8 | COXCCYX10 | |
| 13-10 | 6.70 | 89 | 19 | 38 | 40 | 27 | 173 | 2.8 | COXCCYX13 | |
| 16-10 | 10.00 | 102 | 24 | 45 | 48 | 47 | 210 | 5.0 | COXCCYX16 | |
| 20-10 | 16.00 | 114 | 28 | 54 | 60 | 56 | 260 | 7.6 | COXCCYX20 | |
| 22-10 | 19.00 | 127 | 32 | 63 | 70 | 55 | 275 | 12.3 | COXCCYX22 | |
| 26-10 | 26.50 | 136 | 35 | 72 | 80 | 62 | 305 | 17.9 | COXCCYX26 | |
| 32-10 | 40.00 | 153 | 38 | 84 | 95 | 70 | 330 | 27.3 | COXCCYX32 | |

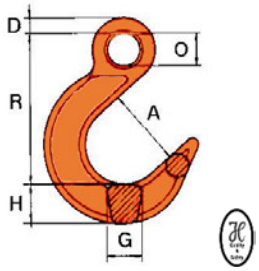


## Container/gieterij gaffelhaak-G100 / Crochet de fonderie a chape-G100 / Clevis foundry hook-G100 / Weitmaulhaak-G100
Type CGXC / Type CGXC / Type GXC / Type CGXC

| Nominale maat Désignation Nominal size Nenngrösse | WLL CMU [t] | A mm | B mm | C mm | G mm | H mm | R mm | PxL mm | KG | Art.NR Code Art. Stock No. Art.Nr. | € |
|---|---|---|---|---|---|---|---|---|---|---|---|
| 6-10 | 1.40 | 53.5 | 8.5 | 6.5 | 22 | 26 | 91 | 7.5x17.5 | 0.7 | CGXCCYFX06 | |
| 7-10 | 1.90 | 64 | 10 | 11.5 | 26 | 31 | 120 | 9x22.5 | 1.1 | CGXCCYFX07 | |
| 8-10 | 2.50 | 64 | 10 | 11.5 | 26 | 31 | 120 | 10x22.5 | 1.1 | CGXCCYFX08 | |
| 10-10 | 4.00 | 76 | 13 | 15 | 30 | 34 | 131 | 13x31.5 | 1.7 | CGXCCYFX10 | |
| 13-10 | 6.70 | 89 | 17 | 17.5 | 40 | 44.5 | 148 | 16x42 | 3.6 | CGXCCYFX13 | |
| 16-10 | 10.00 | 101 | 19 | 21.5 | 45 | 50.5 | 198 | 21x51.5 | 5.6 | CGXCCYFX16 | |

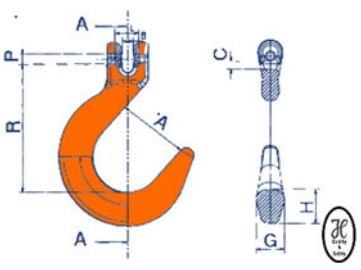

## Inkorthaak met oog-G100 / Crochet de racourd. a œil –G100 / Eye grab hook-G100 / Verkürzungshaak m. Öse-G100
Type VOXC (S)

| Nominale maat Désignation Nominal size Nenngrösse | WLL CMU [t] | A mm | D mm | G mm | H mm | O mm | R mm | KG | Art.NR Code Art. Stock No. Art.Nr. | € | Art.NR Code Art. Stock No. Art.Nr. | (S) € |
|---|---|---|---|---|---|---|---|---|---|---|---|---|
| 6-10 | 1.40 | 8 | 8.5 | 22 | 22 | 12 | 51.5 | 0.18 | VOXCCDX06 | | VOXCCDXS06 | |
| 7/8-10 | 2.50 | 10 | 11 | 30 | 28 | 17 | 68 | 0.40 | VOXCCDX08 | | VOXCCDXS08 | |
| 10-10 | 4.00 | 13 | 15 | 44 | 34 | 22 | 87 | 0.88 | VOXCCDX10 | | VOXCCDXS10 | |
| 13-10 | 6.70 | 17 | 18 | 53 | 47 | 26 | 110 | 1.95 | VOXCCDX13 | | VOXCCDXS13 | |
| 16-10 | 10.00 | 20 | 21 | 64 | 60 | 32 | 129 | 3.20 | VOXCCDX16 | | VOXCCDXS16 | |
| 20-10 | 16.00 | 23 | 23 | 85 | 64 | 38 | 153 | 4.9 | VOXCCDX20 | | | |
| 22-10 | 19.00 | 26 | 26 | 92 | 65 | 41 | 180 | 7.5 | VOXCCDX22 | | | |
| 26-10 | 26.50 | 30.5 | 36 | 100 | 90 | 50 | 213 | 13 | VOXCCDX26 | | | |
| 32-10 | 40.00 | 38 | 43 | 112 | 87 | 60 | 243 | 25.4 | VOXCCDX32 | | | |

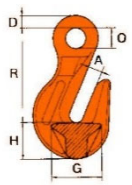


## Inkorthaak met gaffel-G100 / Crochet de racourdissement-G100 / Clevis grab hook-G100 / Verkürzungshaak m. Gabel-G100
Type CFXC (S)

| Nominale maat Désignation Nominal size Nenngrösse | WLL CMU [t] | A mm | B mm | C mm | G mm | H mm | R mm | KG | Art.NR Code Art. Stock No. Art.Nr. | € | Art.NR Code Art. Stock No. Art.Nr. | S) € |
|---|---|---|---|---|---|---|---|---|---|---|---|---|
| 6-10 | 1.40 | 8 | 8 | 9 | 22 | 22 | 50 | 0.20 | CFXCCFX06 | | CFXCCFXS06 | |
| 7-10 | 1.90 | 10 | 10 | 11 | 30 | 28 | 65 | 0.44 | CFXCCFX07 | | CFXCCFXS07 | |
| 8-10 | 2.50 | 10 | 10 | 11 | 30 | 28 | 65 | 0.44 | CFXCCFX08 | | CFXCCFXS08 | |
| 10-10 | 4.00 | 13 | 13 | 15 | 34 | 34 | 80 | 0.96 | CFXCCFX10 | | CFXCCFXS10 | |
| 13-10 | 6.70 | 17 | 17 | 17 | 47 | 47 | 105 | 2.10 | CFXCCFX13 | | CFXCCFXS13 | |
| 16-10 | 10.00 | 19 | 19 | 18 | 64 | 60 | 111 | 3.40 | CFXCCFX16 | | CFXCCFXS16 | |
| 20-10 | 16.00 | 23 | 23 | 22 | 84 | 65 | 118 | 5.20 | CFXCCFX20 | | | |
| 22-10 | 19.00 | 26 | 26 | 25 | 92 | 65 | 154 | 7.80 | CFXCCFX22 | | | |

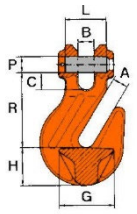


## Rijghaak Combi Set (A1355+S1325) / Crochet coulissant Combi Set(A1355+S1325) / Chain Chocker hook-Combi Set(A1355+S1325) / Schlitz-Ring Haak-Combi Set(A1355+S1325)
Type LK-Combi

| | Nominale maat Désignation Nominal size Nenngrösse | WLL CMU [t] | B mm | D mm | E mm | H mm | P mm | S mm | Kg | Art.NR Code Art. Stock No. Art.Nr. | € |
|---|---|---|---|---|---|---|---|---|---|---|---|
| A-1355 | 7/8-10 | 2.50 | 52.1 | 30 | 123 | 20 | 17.5 | 16.5 | 0.34 | LK08A1355 | |
| | 10-10 | 4.00 | 67.6 | 40 | 154 | 23.6 | 23.6 | 17.5 | 0.74 | LK10A1355 | |
| | 13-10 | 6.70 | 85.1 | 52 | 193 | 30 | 32 | 23.8 | 1.42 | LK13A1355 | |
| | 16-10 | 10.0 | 107 | 64 | 246 | 40 | 28.4 | 30 | 3.16 | LK16A1355 | |
| S-1325A | 7/8-10 | 2.50 | 59 | 22.4 | 35.6 | | | | 0.23 | OMG08S1325 | |
| | 10-10 | 4.00 | 69 | 30 | 46.7 | | | | 0.34 | OMG10S1325 | |
| | 13-10 | 6.70 | 95 | 38.1 | 55.6 | | | | 0.75 | OMG13S1325 | |
| | 16-10 | 10.0 | 112 | 50 | 71.4 | | | | 0.86 | OMG16S1325 | |

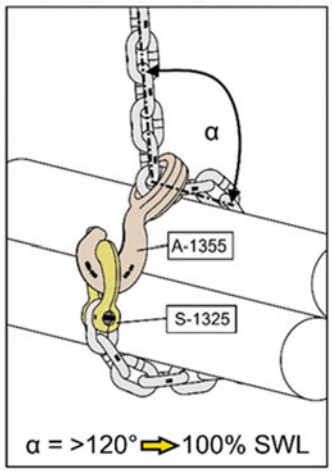


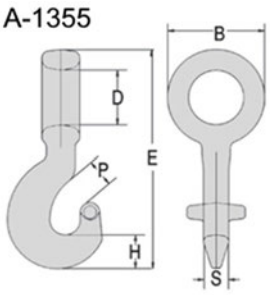


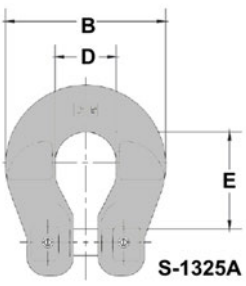




## Inkortklauw m. gaffel & veiligheid G100 Type KSXC / Griffe de racourd. & 12écurité-G100 Type KSXC / Shortening clutch with safety G100 Type KSXC / Verkürzungsklaue m. Sicherheit G100 Type KSXC

| Nominale maat Désignation Nominal size Nenngrösse | WLL CMU [t] | A mm | B mm | C mm | D mm | E mm | F mm | G mm | KG | Art.NR Code Art. Stock No. Art.Nr. | € |
|---|---|---|---|---|---|---|---|---|---|---|---|
| 6-10 | 1.40 | 8 | 8 | 10 | 8 | 19 | 45 | 23 | 0.21 | KSXCCXX06 | |
| 7-10 | 1.90 | 9.5 | 9.5 | 10 | 9.5 | 23.5 | 56 | 29 | 0.48 | KSXCCXX07 | |
| 8-10 | 2.50 | 9.5 | 9.5 | 10 | 9.5 | 23.5 | 56 | 29 | 0.48 | KSXCCXX08 | |
| 10-10 | 4.00 | 12 | 12 | 14.5 | 12 | 32.5 | 78 | 36 | 1.12 | KSXCCXX10 | |
| 13-10 | 6.70 | 15.5 | 15.5 | 18 | 15.5 | 44 | 90 | 35 | 1.83 | KSXCCXX13 | |
| 16-10 | 10.00 | 19 | 21 | 21 | 19 | 50 | 106 | 38 | 2.83 | KSXCCXX16 | |
| 20-10 | 16.00 | | | | | | | | | KSXCCXX20 | |

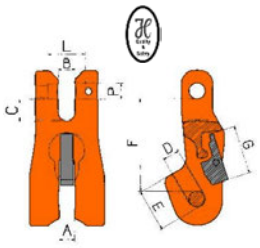


## Inkortklauw met gaffel & veer-G100 Type KVGC / Griffe de racourdissement & resort-G100 Type KVGC / Shortening clutch with safety G100 Type KVGC / Verkürzungsklaue –G100 Type KVGC

| Nominale maat Désignation Nominal size Nenngrösse | WLL CMU [t] | A mm | B mm | C mm | D mm | E mm | F mm | G mm | H mm | I mm | Kg | Art.NR Code Art. Stock No. Art.Nr. | € |
|---|---|---|---|---|---|---|---|---|---|---|---|---|---|
| 7-10 | 1.90 | 9.5 | 9.5 | 10 | 9.5 | 23.5 | 56 | 29 | 158 | 8.5 | 0.8 | KVGCCXXL07 | |
| 8-10 | 2.50 | 9.5 | 9.5 | 10 | 9.5 | 23.5 | 56 | 29 | 164 | 10 | 0.9 | KVGCCXXL08 | |
| 10-10 | 4.00 | 12 | 12 | 14.5 | 12 | 32.5 | 78 | 36 | 193 | 12.5 | 1.6 | KVGCCXXL10 | |
| 13-10 | 6.70 | 15.5 | 15.5 | 18 | 15.5 | 44 | 90 | 35 | 249 | 16 | 3.3 | KVGCCXXL13 | |
| 16-10 | 10.00 | 19 | 21 | 21 | 19 | 50 | 106 | 38 | 303 | 20 | 5.8 | KVGCCXXL16 | |

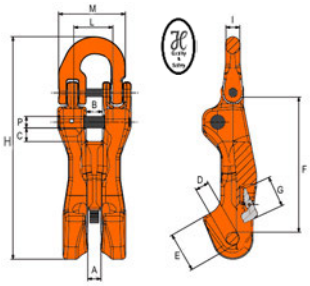


## Inkorthaak met oog/gaffel-G100 Type KOGC / Crochet de racourdissement -G100 Type KOGC / Clevis Shortening hook - G100 Type KOGC / Verkürzungshaak öse/gabel – G100 Type KOGC

| Nominale maat Désignation Nominal size Nenngrösse | WLL CMU [t] | A mm | B mm | C mm | D mm | G mm | O mm | R mm | H mm | PxI mm | Kg | Art.NR Code Art. Stock No. Art.Nr. | € |
|---|---|---|---|---|---|---|---|---|---|---|---|---|---|
| 6-10 | 1.60 | 8 | 7,5 | 8,8 | 9 | 29 | 18 | 85 | 37 | 7,5x17,5 | 0,3 | KOGCCDFX06 | |
| 7-10 | 1.90 | 10,5 | 10 | 11,5 | 12 | 39 | 24 | 122 | 54 | 9x22,5 | 0,7 | KOGCCDFX07 | |
| 8-10 | 2.50 | 10,5 | 10 | 11 | 12 | 39 | 24 | 122 | 54 | 10x22,5 | 0,7 | KOGCCDFX08 | |
| 10-10 | 4.00 | 13 | 12 | 15 | 14,5 | 50 | 31 | 160 | 70 | 13x31,5 | 1,3 | KOGCCDFX10 | |
| 3-10 | 6.70 | 16 | 15,5 | 17,5 | 18 | 64 | 37 | 204 | 92 | 16x42 | 3,0 | KOGCCDFX13 | |
| 16-10 | 10.00 | 20 | 18,5 | 21,5 | 24 | 80 | 48 | 232 | 102 | 21x51,5 | 5,2 | KOGCCDFX16 | |

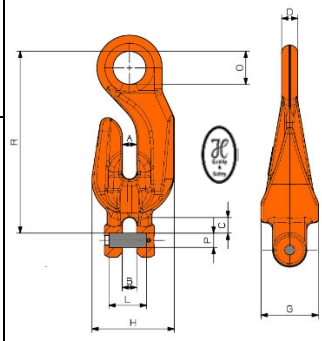

Wisselstukken. Pieces de rechange Spare parts Ersatzteilen

| Nominale maat<br>Désignation<br>Nominal size<br>Nenngrösse | Type<br>LSGC<br>LSOC |  | Type<br>SGXC<br>SOXC |  | Type<br>LSGC<br>SGXC |  | Type<br>VGXC |  |
|---|---|---|---|---|---|---|---|---|
| | Art.NR<br>Code Art.<br>Stock No.<br>Art.Nr. | € | Art.NR<br>Code Art.<br>Stock No.<br>Art.Nr. | € | Art.NR<br>Code Art.<br>Stock No.<br>Art.Nr. | € | Art.NR<br>Code Art.<br>Stock No.<br>Art.Nr. | € |
| 6-10 | KITCKSLX06 | | KITCKSX06 | | KITCKPX06 | | KITCLKX06 | |
| 7-10 | | | | | KITCKPX07 | | KITCLKX07 | |
| 7/8-10 | KITCKSLX08 | | KITCKSX08 | | | | | |
| 8-10 | | | | | KITCKPX08 | | KITCLKX08 | |
| 10-10 | KITCKSLX10 | | KITCKSX10 | | KITCKPX10 | | KITCLKX10 | |
| 13-10 | KITCKSLX13 | | KITCKSX13 | | KITCKPX13 | | KITCLKX13 | |
| 16-10 | KITCKSLX16 | | KITCKSX16 | | KITCKPX16 | | KITCLKX16 | |
| 20-10 | KITCKSLX20 | | KITCKSX20 | | KITCKPX20 | | KITCLKX20 | |
| 22-10 | KITCKSLX22 | | KITCKSX22 | | KITCKPX22 | | KITCLKX22 | |
| 26-10 | KITVLHW26 | | KITCKSX26 | | | | KITCLKX26 | |
| 32-10 | KITVLHW32 | | | | | | KITCLKX32 | |

Wisselstukken. Pieces de rechange Spare parts Ersatzteilen

| Nominale maat<br>Désignation<br>Nominal size<br>Nenngrösse | Type<br>KVGC<br>KSXC |  | Type<br>SGXC |  | Type<br>CFXC<br>CGXC |  | Type<br>KVGC |  |
|---|---|---|---|---|---|---|---|---|
| | Art.NR<br>Code Art.<br>Stock No.<br>Art.Nr. | € | Art.NR<br>Code Art.<br>Stock No.<br>Art.Nr. | € | Art.NR<br>Code Art.<br>Stock No.<br>Art.Nr. | € | Art.NR<br>Code Art.<br>Stock No.<br>Art.Nr. | € |
| 6-10 | KITCKX06 | | KITSKPX06B | | CKPX06 | | | |
| 7-10 | KITCKX07 | | KITCKPX07 | | CKPX07 | | CKPXL07 | |
| 7/8-10 | | | | | | | | |
| 8-10 | KITCKX08 | | KITCKPX08 | | CKPX08 | | CKPXL08 | |
| 10-10 | KITCKX10 | | KITCKPX10B | | CKPX10F | | CKPXL10 | |
| 13-10 | KITCKX13 | | KITCKPX13B | | CKPX13F | | CKPXL13 | |
| 16-10 | KITCKX16 | | KITCKPX16B | | CKPX16F | | CKPXL16 | |
| 20-10 | | | KITCKPX20B | | CKPX20 | | | |
| 22-10 | | | | | | | | |
| 26-10 | | | | | | | | |
| 32-10 | | | | | | | | |

| Balanceerjuk – G100<br>Type TDXC | Balanceur d'elingue – G100<br>Type TDXC | Sling balancer – G100<br>Type TDXC | Ausgleichwippe – G100<br>Type TDXC |
|---|---|---|---|

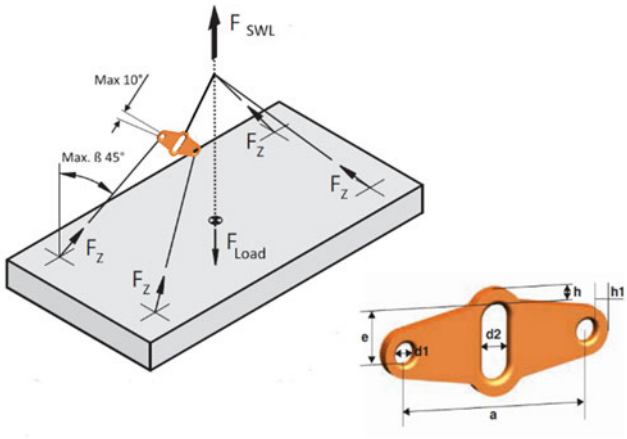


| Nominale maat<br>Désignation<br>Nominal size<br>Nenngrösse | F<br>WLL<br>CMU<br>0°<β≤ 45°<br>[t] | a<br>mm | e<br>mm | d1<br>mm | d2<br>mm | h<br>mm | h1<br>mm | Kg | d1-SWL<br>2x Fitting<br>Ton | d2-SWL<br>1x Fitting<br>Ton | Art.NR<br>Code Art.<br>Stock No.<br>Art.Nr. | € |
|---|---|---|---|---|---|---|---|---|---|---|---|---|
| 6-10 | 4.00 | 148 | 35 | 16 | 22 | 11 | 9 | 0.54 | 1.4 | 2.5 | TDXCAGWW06 | |
| 8-10 | 7.10 | 210 | 51 | 22 | 25 | 15.5 | 14 | 1.75 | 2.5 | 4 | TDXCAGWW08 | |
| 10-10 | 11.20 | 180 | 32 | 25 | 32 | 23 | 15.5 | 1.56 | 4 | 6.7 | TDXCAGWW10 | |
| 13-10 | 19.00 | 240 | 53 | 32 | 40 | 27 | 20 | 3.60 | 6.7 | 10 | TDXCAGWW13 | |
| 16-10 | 28.00 | 300 | 77 | 40 | 50 | 32 | 25 | 7.18 | 10 | 16 | TDXCAGWW16 | |

| Topschalm met gaffel-G100<br>Type AGPC | Anneau simple a chape-G100<br>Type AGPC | Masterlink with clevis G100<br>Type AGPC | Aufhangeglied mit gabel –G100<br>Type AGPC |
|---|---|---|---|

| Nominale maat<br>Désignation<br>Nominal size<br>Nenngrösse | WLL<br>CMU<br>[t] | e<br>mm | t<br>mm | w<br>mm | d<br>mm | s<br>mm | Kg | Art.NR<br>Code Art.<br>Stock No.<br>Art.Nr. | € |
|---|---|---|---|---|---|---|---|---|---|
| 7-10 | 1.90 | 92 | 70 | 34 | 9 | 9 | 0.28 | AGPCKOW07 | |
| 8-10 | 2.50 | 91 | 70 | 34 | 10 | 9 | 0.30 | AGPCKOW08 | |
| 10-10 | 4.00 | 128 | 102 | 50 | 13 | 12 | 0.70 | AGPCKOW10 | |
| 13-10 | 6.70 | 169 | 136 | 66 | 16 | 15 | 1.40 | AGPCKOW13 | |
| 16-10 | 10.00 | 214 | 172 | 83 | 20 | 18 | 2.74 | AGPCKOW16 | |

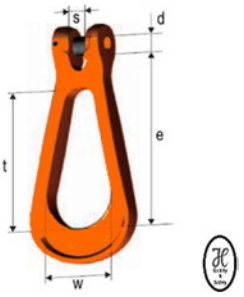


| Tuimelanker voor damplanken en algemene doeleinden -G100<br>Type KNBL | Ancrage à pivot pour palplanches et usage général -G100<br>Type KNBL | Toggle anchor for sheet piles and general purpose -G100<br>Type KNBL | Knebel für Spundwandbohlen und allgemeine Transportzwecke –G100<br>Type KNBL |
|---|---|---|---|

| Nominale maat<br>Désignation<br>Nominal size<br>Nenngrösse | WLL<br>CMU<br>[t] | e<br>mm | a<br>mm | b<br>mm | c<br>mm | $d_1$<br>mm | $d_{min}$<br>mm | $d_{max}$<br>mm | Kg<br>0.30 | Art.NR<br>Code Art.<br>Stock No.<br>Art.Nr. | € |
|---|---|---|---|---|---|---|---|---|---|---|---|
| 8-10 | 2.50 | 10 | 17 | 120 | 38 | 15 | 40 | 60 | | KNBLKNEW08 | |

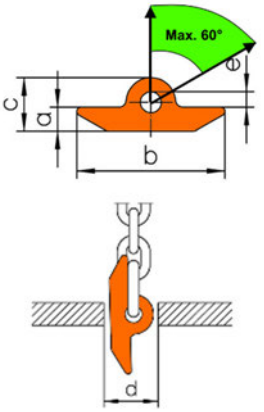

## Verbindingsschalm –G100 / Maillon de jonction-G100 / Coupling link –G100 / Verbindungsglied–G100
Type YX015

| Nominale maat Désignation Nominal size Nenngrösse | WLL CMU [t] | A mm | B mm | D mm | K mm | Kg | Art.NR Code Art. Stock No. Art.Nr. | € |
|---|---|---|---|---|---|---|---|---|
| 6-10 | 1.40 | 15 | 18 | 7 | 45 | 0,08 | YX01506 | |
| 7/8-10 | 2.50 | 18 | 25 | 9 | 59 | 0,2 | YX01507 | |
| 10-10 | 4.00 | 25 | 28 | 11 | 69 | 0,3 | YX01510 | |
| 13-10 | 6.70 | 30 | 38 | 16 | 92 | 0,7 | YX01513 | |
| 16-10 | 10.00 | 36 | 41 | 19 | 101 | 1,2 | YX01516 | |
| 20-10 | 16.00 | 42 | 50 | 23 | 122 | 2,1 | YX01520 | |
| 22-10 | 19.00 | 49 | 63 | 24 | 152 | 3,5 | YX01522 | |
| 26-10 | 26.50 | 55 | 66 | 30 | 162 | 4,8 | YX01526 | |
| 32-10 | 40.00 | 69 | 85 | 36 | 203 | 9 | YX01532 | |

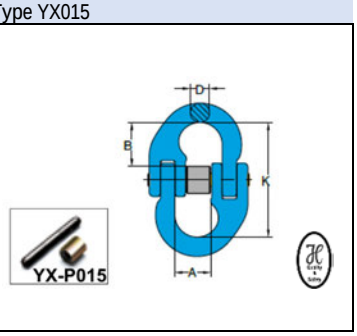


## Textiel-verbindingsschalm –G100 / Textile-Maillon de jonction-G100 / Textile-Coupling link –G100 / Textil-Verbindungsglied–G100
Type YX016

| Nominale maat Désignation Nominal size Nenngrösse | WLL CMU [t] | A mm | B mm | D mm | K mm | W mm | Kg | Art.NR Code Art. Stock No. Art.Nr. | € |
|---|---|---|---|---|---|---|---|---|---|
| 6-10 | 1.40 | 15 | 17 | 7 | 55 | 38 | 0.2 | YX01606 | |
| 7/8-10 | 2.50 | 18 | 22 | 9 | 62 | 40 | 0.3 | YX01607 | |
| 10-10 | 4.00 | 25 | 26 | 11 | 78 | 47 | 0.6 | YX01610 | |
| 13-10 | 6.70 | 30 | 35 | 16 | 95 | 53 | 1.1 | YX01613 | |
| 16-10 | 10.00 | 36 | 38 | 19 | 115 | 67 | 1.9 | YX01616 | |
| 20-10 | 16.00 | 42 | 46 | 22 | 132 | 80 | 3.2 | YX01620 | |
| 22-10 | 19.00 | 49 | 59 | 24 | 187 | 125 | 7.7 | YX01622 | |

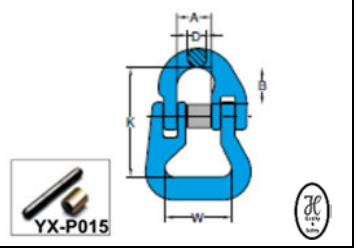


## Veiligheidshaak met oog–G100 / Crochet de securité à œil–G100 / Self Locking eyehook–G100 / Sicherheitslasthaak mit Öse–G100
met handgreep / avec griffe / with grip / mit Griff
Type YX950

| Nominale maat Désignation Nominal size Nenngrösse | WLL CMU [t] | A mm | D mm | H mm | K mm | O mm | P mm | T mm | W mm | KG | Art.NR Code Art. Stock No. Art.Nr. | € |
|---|---|---|---|---|---|---|---|---|---|---|---|---|
| 10-10 | 4.0 | 32 | 13 | 31 | 175 | 49 | 71 | 27 | 139 | 1.9 | YX95010 | |
| 13-10 | 6.7 | 40 | 16 | 39 | 227 | 57 | 80 | 34 | 174 | 3.0 | YX95013 | |
| 16-10 | 10.0 | 50 | 21 | 47 | 277 | 78 | 114 | 39 | 212 | 6.3 | YX95016 | |
| 20-10 | 16.0 | 60 | 23 | 56 | 329 | 91 | 127 | 54 | 250 | 11.7 | YX95020 | |
| 22-10 | 10.0 | 70 | 24 | 59 | 350 | 105 | 151 | 56 | 260 | 14.5 | YX95022 | |

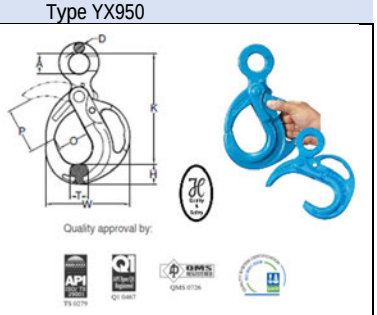


## Veiligheidshaak met gaffel–G100 / Crochet de securité à chape-G100 / Self Locking clevis hook–G100 / Sicherheitslasthaak–G100
met handgreep / avec griffe / with grip / mit Griff
Type YX951

| Nominale maat Désignation Nominal size Nenngrösse | WLL CMU [t]] | A mm | H mm | K mm | O mm | P mm | T mm | W mm | KG | Art.NR Code Art. Stock No. Art.Nr. | € |
|---|---|---|---|---|---|---|---|---|---|---|---|
| 10-10 | 4.0 | 11 | 31 | 153 | 49 | 71 | 27 | 139 | 1.9 | YX95110 | |
| 13-10 | 6.7 | 14 | 39 | 206 | 57 | 80 | 34 | 174 | 4.1 | YX95113 | |
| 16-10 | 10.0 | 18 | 47 | 243 | 78 | 114 | 39 | 212 | 6.4 | YX95116 | |
| 20-10 | 16.0 | 21 | 56 | 310 | 91 | 127 | 54 | 250 | 12.7 | YX95120 | |
| 22-10 | 10.0 | 24 | 59 | 300 | 105 | 151 | 56 | 260 | 14.1 | YX95122 | |

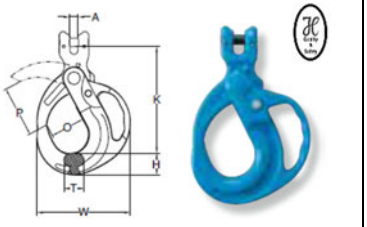

## Veiligheidshaak met wartel-G100 / Crochet de securité à emerilllon-G100 / Swivel Self Locking hook-G100 / Sicherheitslasthaak/Öse-drehbar-G100
met handgreep / avec griffe / with grip / mit Griff
Type YX027N

| Nominale maat Désignation Nominal size Nenngrösse | WLL CMU [t] | A mm | B mm | D mm | H mm | K mm | P mm | T mm | KG mm | Art.NR Code Art. Stock No. Art.Nr. | € |
|---|---|---|---|---|---|---|---|---|---|---|---|
| 6-10 | 1,4 | 32 | 22 | 12 | 19 | 149 | 28 | 15 | 0,7 | YX027N06 | |
| 7/8-10 | 2,5 | 36 | 29 | 13 | 24 | 186 | 34 | 20 | 1,3 | YX027N07 | |
| 10-10 | 4,0 | 41 | 34 | 16 | 30 | 218 | 44 | 26 | 2,0 | YX027N10 | |
| 13-10 | 6,7 | 46 | 43 | 21 | 39 | 276 | 51 | 30 | 4,2 | YX027N13 | |
| 16-10 | 10,0 | 61 | 50 | 23 | 49 | 329 | 60 | 36 | 7,3 | YX027N16 | |
| 20-10 | 16,0 | 74 | 82 | 25 | 65 | 387 | 70 | 53 | 12,6 | YX027N20 | |
| 22-10 | 19,0 | 97 | 95 | 33 | 63 | 457 | 80 | 49 | 19,2 | YX027N22 | |
| 26-10 | 26,5 | 123 | 115 | 42 | 69 | 535 | 99 | 56 | 32,7 | YX027N26 | |

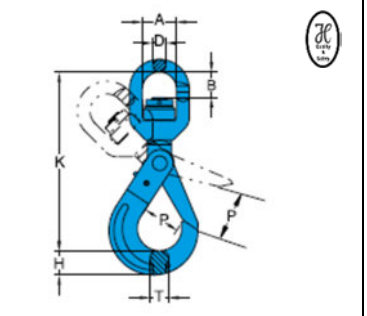

With Ball Bearing- 360°rotation under load

Veiligheidshaak met wartel-G100
met handgreep
Type YX952N

Crochet de securité à emerilllon-G100
avec griffe
Type YX952N

Swivel Self Locking hook-G100
with grip
Type YX952N

Sicherheitslasthaak/Öse-drehbar-G100
mit Griff
Type YX952N

| Nominale maat Désignation Nominal size Nenngrösse | WLL CMU [t] | A mm | B mm | D mm | H mm | K mm | O mm | P mm | T mm | W mm | KG mm | Art.NR Code Art. Stock No. Art.Nr. | € |
|---|---|---|---|---|---|---|---|---|---|---|---|---|---|
| 10-10 | 4.0 | 41 | 34 | 16 | 31 | 225 | 49 | 71 | 27 | 139 | 2.4 | YX95210 | |
| 13-10 | 6.7 | 46 | 44 | 21 | 39 | 285 | 57 | 80 | 34 | 174 | 5.2 | YX95213 | |
| 16-10 | 10.0 | 61 | 50 | 23 | 47 | 345 | 78 | 114 | 39 | 212 | 8.4 | YX95216 | |
| 20-10 | 16.0 | 74 | 82 | 25 | 56 | 433 | 91 | 127 | 54 | 250 | 14.5 | YX95220 | |
| 22-10 | 19.0 | 97 | 95 | 33 | 59 | 475 | 105 | 151 | 56 | 260 | 19.9 | YX95222 | |

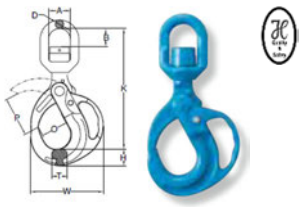

With Ball Bearing- 360°rotation under load

D-schakel Form C-DIN 82101
met moerbout & splitpen-G100-
Type CHCC

D-Manille Form C -DIN 82101
avec boullon & goupille-G100
Type CHCC

D-Shackle Form C-DIN
with bolt & nut-cotter pin-G100
Type CHCC

D-Schäkel Form C-DIN 82101
mit mutter & splint-G100
Type CHCC

| Nominale maat Désignation Nominal size Nenngrösse | WLL CMU [t] | $d_1$ mm | $d_2$ mm | $d_4$ mm | $b_1$ mm | $b_2$ mm | $h_1$ mm | KG mm | Art.NR Code Art. Stock No. Art.Nr. | € |
|---|---|---|---|---|---|---|---|---|---|---|
| 6-10* | 1.4 | 9 | 20 | 13 | 13 | 28 | 28 | 0,32 | CHCCTWN187106 | |
| 8-10* | 2.5 | 12 | 26 | 14 | 17 | 38 | 38 | 0,40 | CHCCTWN187108 | |
| 10-10 | 4.0 | 15 | 32 | 16 | 21 | 47 | 49 | 0,45 | CHCCTWN187110 | |
| 13-10 | 6.7 | 19 | 40 | 20 | 28 | 62 | 61 | 0,84 | CHCCTWN187113 | |
| 16-10 | 10.0 | 23 | 48 | 24 | 33 | 75 | 73 | 1,49 | CHCCTWN187116 | |
| 18-10 | 12.5 | 27 | 56 | 27 | 40 | 88 | 84 | 2.20 | CHCCJDTHEVS16 | |
| 20-10* | 16.0 | 30 | 64 | 30 | 42 | 95 | 91 | 3,20 | CHCCTWN187120 | |
| 22-10 | 19 | 33 | 72 | 36 | 47 | 107 | 111 | 4,59 | CHCCTWN187122 | |

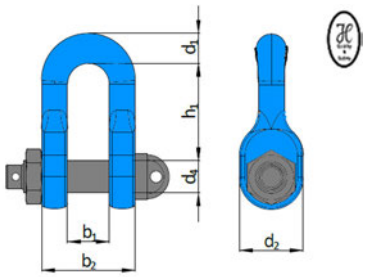

(*) On Request

Lasbare hijsbeugel-G100
Voor hijsen en sjorren, met veer
Type APAS-M
- 100% Crack Check
- Temp. : Max 380°C
- Belastbaar in alle richtingen
- 180° scharnierbaar
- Lasbasis blank

Anneau de levage à souder-G100
pour le levage et l'arrimage, avec ressort
Type APAS-M
- - 100 % ruptures détectées
- - Temp. : Max 380°C
- - Chargement toutes directions
- - Articulé à 180
- - Selle de soudure colorée

Weld-on Attachment point-G100
for lifting and lashing, with spring
Type APAS-M
- 100% Crack Check
- Temp. : Max 380°C°
- Loadable in all directions
- 180° hinged
- Welding saddle self coloured

Anschlagpunkt anschweisbar-G100
Zum heben und zurren, mit feder
Type APAS-M
- 100% Crack Check
- Temp. : Max 380°C
- Loadable in all directions
- 180° klappbar
- Anschweissbock Roh

| Nominale maat Désignation Nominal size Nenngrösse | LIFTING WLL CMU [t] | LASHING LC [daN] | a mm | b mm | s1 mm | s2 mm | h mm | t mm | w mm | Kg | Art.NR Code Art. Stock No. Art.Nr. | € |
|---|---|---|---|---|---|---|---|---|---|---|---|---|
| 0 | 1.4 | 2800 | 35 | 37 | 15 | 13,5 | 41,5 | 69,5 | 39,5 | 0,4 | 463950014 | |
| 2.5 | 2.5 | 5000 | 40 | 40 | 16 | 14 | 47 | 77,5 | 45 | 0,6 | 463950025 | |
| 4 | 4 | 8000 | 45 | 48 | 19 | 17,5 | 52 | 86 | 50 | 0,9 | 463950040 | |
| 6.7 | 6.7 | 13400 | 53 | 60 | 25,5 | 22 | 61,5 | 103 | 60 | 1,8 | 463950067 | |
| 10 | 10 | 20000 | 63 | 74 | 29,5 | 26 | 72 | 126 | 70 | 3,0 | 463950100 | |
| 16 | 16 | 32000 | 90 | 92 | 38 | 34 | 102 | 168,5 | 100 | 6,7 | 463950160 | |
| 20 | 20 | 40000 | 100 | 104 | 44,5 | 40 | 112 | 189 | 110 | 10,0 | 463950200 | |

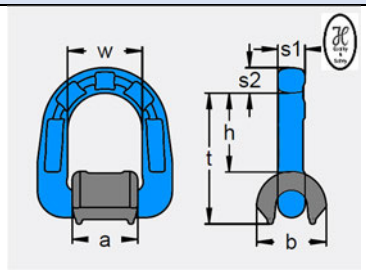

SF 4:1
According Welding Instructions

Lasbare hijsbeugel-G100
Voor hijsen en sjorren
Type APAS-M
- 100% Crack Check
- Temp. : Max 380°C
- Belastbaar in alle richtingen
- 180° scharnierbaar
- Lasbasis blank

Anneau de levage à souder-G100
pour le levage et l'arrimage
Type APAS-M
- - 100 % ruptures détectées
- - Temp. : Max 380°C
- - Chargement toutes directions
- - Articulé à 180
- - Selle de soudure colorée

Weld-on Attachment point-G100
for lifting and lashing
Type APAS-M
- 100% Crack Check
- Temp. : Max 380°C°
- Loadable in all directions
- 180° hinged
- Welding saddle self coloured

Anschlagpunkt anschweisbar-G100
Zum heben und zurren
Type APAS-M
- 100% Crack Check
- Temp. : Max 380°C
- Loadable in all directions
- 180° klappbar
- Anschweissbock Roh

| Nominale maat Désignation Nominal size Nenngrösse | LIFTING WLL CMU [t] | LASHING LC [daN] | a mm | b mm | s1 mm | s2 mm | h mm | t mm | w mm | Kg | Art.NR Code Art. Stock No. Art.Nr. | € |
|---|---|---|---|---|---|---|---|---|---|---|---|---|
| 1.4 | 1.4 | 2800 | 35 | 37 | 15 | 13,5 | 41,5 | 69,5 | 39,5 | 0,4 | 463951014 | |
| 2.5 | 2.5 | 5000 | 40 | 40 | 16 | 14 | 47 | 77,5 | 45 | 0,6 | 463951025 | |
| 4 | 4 | 8000 | 45 | 48 | 19 | 17,5 | 52 | 86 | 50 | 0,9 | 463951040 | |
| 6.7 | 6.7 | 13400 | 53 | 60 | 25,5 | 22 | 61,5 | 103 | 60 | 1,8 | 463951067 | |
| 10 | 10 | 20000 | 63 | 74 | 29,5 | 26 | 72 | 126 | 70 | 3,0 | 463951100 | |
| 16 | 16 | 32000 | 90 | 92 | 38 | 34 | 102 | 168,5 | 100 | 6,7 | 463951160 | |
| 20 | 20 | 40000 | 100 | 104 | 44,5 | 40 | 112 | 189 | 110 | 10,0 | 463951200 | |

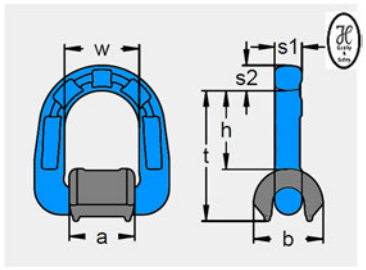

SF 4:1
According Welding Instructions

# GRADE 100 & 80



**DRAAIBARE HIJSOGEN | LASBEUGELS | VERANKERINGSPUNTEN VOOR VALBEVEILIGING**

**SWIVEL EYEBOLTS | WELD-ON POINTS | ANTIFALLING STOP DEVICE**

**ANNEAUX DE LEVAGE ÉMERILLON | DISPOSITIF D' ANCRAGE | D' ARRÊT ANTICHUTE**

**DREHBARE ANSCHLAGPUNKTE SCHRAUBAR - SCHWEISSBAR | ABSTURZSICHERUNGSPUNKT**

www.DECORLUX.be
HIJSTECHNIEK
TECHNIQUE LEVAGE
HEBETECHNIK
LIFTING TECHNICS

**MARKINGS**

[ CARTEC ]: Manufacturer label
[ CE ]: CE markings in compliance with the Machinery Directive 2006/42/EC
[ WLL ... t ]: Maximum load that can be used in tons (for example 13 t)
[ 1/L ]: Traceability batch
[ ]: QR code for instructions
[ ∧ ]: Working load limit positions
[ 813 ]: Product code
[ 10 ]: Grade 100
[ M...]: Reference thread

**CHECK SUITABILITY BEFORE USE**

Before use each time make sure that:
1) The Hoist rings and its entire component including the screw do not have defects due to wear, corrosion, cracks or visible deformations.
2) Markings have to be clearly legible and the specific user manuals are always applicable.
3) The loads to be lifted are in compliance with the loads of the eyebolts (the loads are specified both on the eyebolts and on the specific user manual)
4) The diameter of the ring has not been reduced more than the 10% of the original diameter of the ring itself due to wear in one of the points of contact eyebolt's body rotates freely. If these checks give negative outcome, the eyebolt must not be use anymore, and must be replaced
Please remember that:
-Checks have to be carried out by a qualified staff as lifting accessories
-Hoist rings must undergo checks at regular intervals and scheduled in compliance with the laws in force
1) The rotating eyebolt with clamps must be fitted by a qualified staff of age as it is used for lifting operations which must be carried out in compliance to the Machinery Directive 2006/42/EC and subsequent modifications.
2) The qualified person supervise the lifting operation and must always detect the gravity centre of the load and position the eyebolts in order to guarantee that the said load is always balanced
3) If the load is asymmetrical take into consideration a decrease in capacity as shown on the reference chart
4) Check suitability of the resistance class of the mother screw which has to house the eyebolt with the ratio of the load to be lifted (the material of the mother screw has to have a traction of resistance which is the same or higher than steel S235JR – norm of reference UNI EN 10025)
5) The depth of the threaded hole has to be minimum

- **1xd for steel**
- **1.25xd for cast iron**
- **1.5xd for cast iron casting with low resistance (resistance<200 Mpa)**
- **2xd for aluminium alloys**
- **2.5xd for aluminium-magnesium alloys**

6) The threaded hole must be perpendicular to the surface
7) Make sure that the surface of the mother screw is suitable for the planarity and dimension in order to guarantee touching of all the surface place of the eyebolt and that adheres suitably. The eyebolt cannot be used with parts of the lifting surface
8) To install the eyebolt simply manually look the screw with the key without the aid of extension leads which could preload the screw with excessive locking (do not exceed locking specified in the chart)
9) Lock the eyebolt until its fits completely onto the surface
10) Once locking has been carried out make sure that the clamp and the ring rotate freely and correctly
11) Once lockinq has been carried out orient the ring of the device in the direction of the load
12) REASONS FOR CAPACITY REDUCTIONS
Ambient temperature & Load limit reduction:

- **below -40°C Not permitted**
- **from -40°C to 200°C None**
- **from 200°C to 300°C -10%**
- **from 300°C to 400°C -25%**
- **over 400°C Not permitted**

13) Safety coefficient 4
14) For lifting device that remain attached to the structure we recommend the part being locked by means of thread brake glue
15) The eyebolt can be used safely up to maximum of 20.000 lifts with a full load
16) For risky lifting operations safety measurement have to be taken for the people who undergo the risk
17) if the instructions are not adhered to serious damage can be caused to things and injured to people
18) The documentation has been drawn up in compliance with section 1.7.4.2 of the Machinery Directive 2006/42/EC

**NOT ALLOWED**

1) Do not use eyebolts in acid high corrosion chemical environment and/or in an explosive atmosphere
2) Do not use in environment with a temperature higher than 400°C or lower than – 40°C
3) Do not exceed the capacity specified on the reference chart
4) Do not use for operations which defer from the ones that are foreseen
5) Do not use locking screws which are larger than than ones specified to assemble the eyebolt
6) Do not replace screw and all the original components
7) Do not use to lifting people
8) Do not stand under an overhanging load
9) Do not stand during use in dangerous areas (dangerous areas means areas which deemed risky due to falling of load during movement with accessories
10) If changes, repairs and/or treatments are made to the product, the terms of guarantee are no longer applicable and the manufacturer declines all liability

**STORAGE**

The device must be stored in a suitable environment (ex. dry, non-corrosive, etc.).

**DISPOSAL**

The product packaging must be sent for normal recycling.
The product must be recovered as metal scrap.

# CARTEC

## C800

**ROTATING EYEBOLT WITH RING** - can be oriented during loading

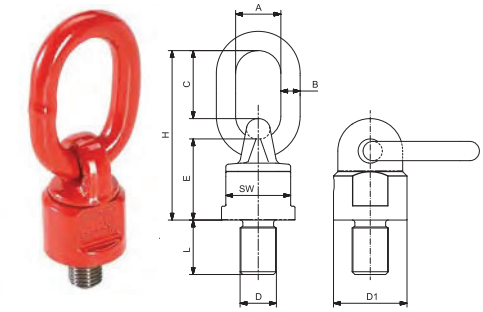


**FORESEEN USE**

**Rotating eyebolt needed to lift loads to assemble to the load itself with specific threaded hole generally used to turn or tilt heavy loads.**

- Coefficient 4 in all loading directions
- Designed, tested and certified in compliance with the technical directives GS-OA 15-04 – EN 1677
- Suitable for safe lifting in compliance with the machinery directive 2006/42/EC
- Tested at 100 % magnaflux
- Tested at 20.000 fatigue cycles
- Non standard threading and stem length upon request
- Can be oriented at 360° with self aligning tilting ring at 180°
- Assembled with spheres to make load orientation easier
- On the axial pull there can be variation of +/-5° with a 10% decrease in capacity

**Available, on demand, not standard threading and stem length.**

| Code | **Size** mm DxL | **W.L.L.** t | **A** mm | **B** mm | **C** mm | **E** mm | **H** mm | **SW** mm | **D1** mm | **Weight** Kg |
|---|---|---|---|---|---|---|---|---|---|---|
| **C8000030816** | M8x16 | 0,3 | 30 | 13 | 46 | 50 | 105 | 30 | 38 | 0,48 |
| **C8000030818** | M8x18 | 0,3 | 30 | 13 | 46 | 50 | 105 | 30 | 38 | 0,48 |
| **C8000031018** | M10x18 | 0,3 | 30 | 13 | 46 | 50 | 105 | 30 | 38 | 0,48 |
| **C8000051218** | M12x18 | 0,5 | 30 | 13 | 46 | 50 | 105 | 30 | 38 | 0,5 |
| **C8000051225** | M12x25 | 0,5 | 30 | 13 | 46 | 50 | 105 | 30 | 38 | 0,5 |
| **C8000101620** | M16x20 | 1,12 | 30 | 13 | 46 | 50 | 105 | 30 | 38 | 0,5 |
| **C8000101630** | M16x30 | 1,12 | 30 | 13 | 46 | 50 | 105 | 30 | 38 | 0,53 |
| **C8000102030** | M20x30 | 1,12 | 30 | 13 | 46 | 50 | 105 | 30 | 38 | 0,53 |
| **C8000202030** | M20x30 | 2 | 34 | 16 | 57 | 61 | 131 | 40 | 50 | 1,05 |
| **C8000302430** | M24x30 | 3,15 | 40 | 18 | 70 | 68 | 153 | 48 | 58 | 1,63 |
| **C8000503035** | M30x35 | 5,3 | 45 | 22 | 65 | 80 | 165 | 65 | 75 | 2,23 |
| **C8000503045** | M30x45 | 5,3 | 45 | 22 | 65 | 80 | 165 | 65 | 75 | 2,23 |
| **C8000803035** | M30x35 | 8 | 50 | 23 | 95 | 95 | 205 | 75 | 85 | 5,3 |
| **C8000803045** | M30x45 | 8 | 50 | 23 | 95 | 95 | 205 | 75 | 85 | 5,3 |
| **C8000803654** | M36x54 | 8 | 50 | 23 | 95 | 95 | 205 | 75 | 85 | 5,5 |
| **C8001004263** | M42x63 | 10 | 50 | 23 | 95 | 95 | 205 | 75 | 85 | 10 |
| **C8001504860** | M48x60 | 15 | 70 | 32 | 120 | 130 | 280 | 95 | 120 | 10 |
| **C8001505678** | M56x78 | 15 | 70 | 32 | 120 | 130 | 280 | 95 | 120 | 10 |
| **C8001506496** | M64x96 | 15 | 70 | 32 | 120 | 130 | 280 | 95 | 120 | 10 |
| **C80025072108** | M72x108 | 25 | 90 | 45 | 130 | 165 | 338 | 140 | 170 | 29 |
| **C80030080120** | M80x120 | 30 | 90 | 45 | 130 | 165 | 338 | 140 | 170 | 29 |
| **C80035090135** | M90x135 | 35 | 90 | 45 | 130 | 165 | 338 | 140 | 170 | 29 |

**Working load limit W.L.L. (t)**

| Code | **Size** mm DxL | **0°** 1 leg | **0°** 2 legs | **90°** 1 leg | **90°** 2 legs | **0°- 45°** 2 legs | **45°- 60°** 2 legs | **Asymm** 2 legs | **0°- 45°** 3/4 legs | **45°- 60°** 3/4 legs | **Asymm** 3/4 legs | **Max tightening torque** Nm |
|---|---|---|---|---|---|---|---|---|---|---|---|---|
| **C8000030816** | 0,3 t - M8x16 | 0,6 | 1,2 | 0,3 | 0,6 | 0,42 | 0,3 | 0,3 | 0,63 | 0,45 | 0,3 | 10 |
| **C8000030818** | 0,3 t - M8x18 | 0,6 | 1,2 | 0,3 | 0,6 | 0,42 | 0,3 | 0,3 | 0,63 | 0,45 | 0,3 | 10 |
| **C8000031018** | 0,3 t - M10x18 | 0,6 | 1,2 | 0,3 | 0,6 | 0,42 | 0,3 | 0,3 | 0,63 | 0,45 | 0,3 | 10 |
| **C8000051218** | 0,5 t - M12x18 | 1 | 2 | 0,5 | 1 | 0,75 | 0,5 | 0,5 | 1,1 | 0,75 | 0,5 | 10 |
| **C8000051225** | 0,5 t - M12x25 | 1 | 2 | 0,5 | 1 | 0,75 | 0,5 | 0,5 | 1,1 | 0,75 | 0,5 | 10 |
| **C8000101620** | 1,12 t - M16x20 | 2 | 4 | 1,12 | 2 | 1,5 | 1,12 | 1,12 | 2,36 | 1,6 | 1,12 | 30 |
| **C8000101630** | 1,12 t - M16x30 | 2 | 4 | 1,12 | 2 | 1,5 | 1,12 | 1,12 | 2,36 | 1,6 | 1,12 | 30 |
| **C8000102030** | 1,12 t - M20x30 | 2 | 4 | 1,12 | 2 | 1,5 | 1,12 | 1,12 | 2,36 | 1,6 | 1,12 | 70 |
| **C8000202030** | 2 t - M20x30 | 4 | 8 | 2 | 4 | 2,8 | 2 | 2 | 4 | 3 | 2 | 70 |
| **C8000302430** | 3,15 t - M24x30 | 6,3 | 12,5 | 3,15 | 6,3 | 4,25 | 3,15 | 3,15 | 6,3 | 4,75 | 3,15 | 150 |
| **C8000503035** | 5,3 t - M30x35 | 10,6 | 21,2 | 5,3 | 10,6 | 7,1 | 5,3 | 5,3 | 11,2 | 8 | 5,3 | 225 |
| **C8000503045** | 5,3 t - M30x45 | 10,6 | 21,2 | 5,3 | 10,6 | 7,1 | 5,3 | 5,3 | 11,2 | 8 | 5,3 | 225 |
| **C8000803035** | 8 t - M30x35 | 12,5 | 25 | 8 | 16 | 11,2 | 8 | 8 | 16,8 | 12 | 8 | 225 |
| **C8000803045** | 8 t - M30x45 | 12,5 | 25 | 8 | 16 | 11,2 | 8 | 8 | 16,8 | 12 | 8 | 225 |
| **C8000803654** | 8 t - M36x54 | 12,5 | 25 | 8 | 16 | 11,2 | 8 | 8 | 16,8 | 12 | 8 | 410 |
| **C8001004263** | 10 t - M42x63 | 15 | 30 | 10 | 20 | 14 | 10 | 10 | 21,2 | 15 | 10 | 550 |
| **C8001504860** | 15 t - M48x60 | 25 | 50 | 15 | 30 | 21 | 15 | 15 | 31,5 | 22,5 | 15 | 550 |
| **C8001505678** | 15 t - M56x78 | 25 | 50 | 15 | 30 | 21 | 15 | 15 | 31,5 | 22,5 | 15 | 800 |
| **C8001506496** | 15 t – M64x96 | 25 | 50 | 15 | 30 | 21 | 15 | 15 | 31,5 | 22,5 | 15 | 800 |
| **C80025072108** | 25 t – M72x108 | 35 | 70 | 25 | 50 | 35 | 25 | 25 | 52,5 | 37,5 | 25 | 800 |
| **C80030080120** | 30 t – M80x120 | 35 | 70 | 30 | 60 | 42 | 30 | 30 | 63 | 45 | 30 | 1500 |
| **C80035090135** | 35 t – M90x135 | 35 | 70 | 35 | 70 | 49 | 35 | 35 | 73,5 | 52,5 | 35 | 2000 |

⚠ **NOT SUITABLE FOR CONTINUOUS ROTATING MOVEMENT DURING LOADING**

# CARTEC

## C800X

**ROTATING EYEBOLT WITH RING** - can be oriented during loading

**FORESEEN USE**

**Rotating eyebolt needed to lift loads to assemble to the load itself with specific threaded hole generally used to turn or tilt heavy loads.**

- Coefficient 4 in all loading directions
- Designed, tested and certified in compliance with the technical directives GS-OA 15-04 – EN 1677
- Suitable for safe lifting in compliance with the machinery directive 2006/42/EC
- Tested at 100 % magnaflux
- Tested at 20.000 fatigue cycles
- Non standard threading and stem length upon request
- Can be oriented at 360° with self aligning tilting ring at 180°
- Assembled with spheres to make load orientation easier
- On the axial pull there can be variation of +/-5° with a 10% decrease in capacity

**Available, on demand, not standard threading and stem length.**

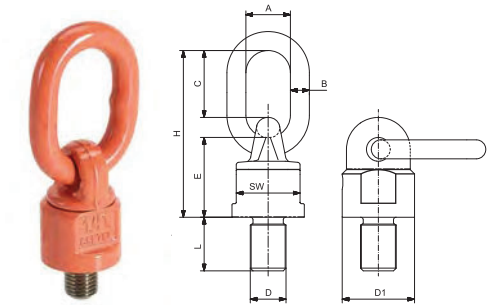


| Code | **Size** mm DxL | **W.L.L.** t | **A** mm | **B** mm | **C** mm | **E** mm | **H** mm | **SW** mm | **D1** ø mm | **Weight** Kg |
|---|---|---|---|---|---|---|---|---|---|---|
| C800X0030816 | M8x16 | 0,3 | 30 | 13 | 46 | 50 | 105 | 30 | 38 | 0,48 |
| C800X0030818 | M8x18 | 0,3 | 30 | 13 | 46 | 50 | 105 | 30 | 38 | 0,48 |
| C800X0051018 | M10x18 | 0,5 | 30 | 13 | 46 | 50 | 105 | 30 | 38 | 0,48 |
| C800X0071218 | M12x18 | 0,7 | 30 | 13 | 46 | 50 | 105 | 30 | 38 | 0,5 |
| C800X0101420 | M14x20 | 1 | 30 | 13 | 46 | 50 | 105 | 30 | 38 | 0,53 |
| C800X0141620 | M16x20 | 1,4 | 30 | 13 | 46 | 50 | 105 | 30 | 38 | 0,53 |
| C800X0172030 | M20x30 | 1,7 | 30 | 13 | 46 | 50 | 105 | 30 | 38 | 0,53 |
| C800X0172430 | M24x30 | 1,7 | 30 | 13 | 46 | 50 | 105 | 30 | 38 | 0,53 |
| C800X0252030 | M20x30 | 2,5 | 34 | 16 | 57 | 61 | 131 | 40 | 50 | 1,05 |
| C800X0402430 | M24x30 | 4 | 40 | 18 | 70 | 68 | 153 | 48 | 58 | 1,63 |
| C800X0403035 | M30x35 | 4 | 40 | 18 | 70 | 68 | 153 | 48 | 58 | 1,63 |
| C800X0673035 | M30x35 | 6,7 | 45 | 22 | 65 | 71 | 156 | 70 | 80 | 2,85 |
| C800X0803045 | M30x45 | 8 | 50 | 23 | 91 | 86 | 200 | 80 | 90 | 4,4 |
| C800X1003654 | M36x54 | 10 | 50 | 23 | 91 | 86 | 200 | 80 | 90 | 4,62 |
| C800X1254263 | M42x63 | 12,5 | 50 | 23 | 91 | 86 | 200 | 80 | 90 | 5,2 |
| C800X1254560 | M45x60 | 12,5 | 50 | 23 | 91 | 86 | 200 | 80 | 90 | 5,2 |
| C800X1254872 | M48x72 | 12,5 | 50 | 23 | 91 | 86 | 200 | 80 | 90 | 5,2 |
| C800X1604560 | M45x60 | 16 | 70 | 32 | 120 | 112 | 262 | 100 | 120 | 10,9 |
| C800X1704860 | M48x60 | 17 | 70 | 32 | 120 | 112 | 262 | 100 | 120 | 10,9 |
| C800X1805678 | M56x78 | 18 | 70 | 32 | 120 | 112 | 262 | 100 | 120 | 10,9 |
| C800X2006496 | M64x96 | 20 | 70 | 32 | 120 | 112 | 262 | 100 | 120 | 10,9 |
| C800X2806496 | M64x96 | 28 | 90 | 45 | 124 | 165 | 333 | 140 | 170 | 29 |
| C800X31572108 | M72x108 | 31,5 | 90 | 45 | 124 | 165 | 333 | 140 | 170 | 29 |
| C800X35080120 | M80x120 | 35 | 90 | 45 | 124 | 165 | 333 | 140 | 170 | 29 |
| C800X40090135 | M90x135 | 40 | 90 | 45 | 124 | 165 | 333 | 140 | 170 | 29 |

**Working load limit W.L.L. (t)**

| Code | **Size** mm DxL | **0°** 1 leg | **0°** 2 legs | **90°** 1 leg | **90°** 2 legs | **0°- 45°** 2 legs | **45°- 60°** 2 legs | **Asymm** 2 legs | **0°- 45°** 3/4 legs | **45°- 60°** 3/4 legs | **Asymm** 3/4 legs | **Max tightening torque** (Nm) |
|---|---|---|---|---|---|---|---|---|---|---|---|---|
| C800X0030816 | 0,3 t - M8x16 | 0,6 | 1,2 | 0,3 | 0,6 | 0,42 | 0,3 | 0,3 | 0,63 | 0,45 | 0,3 | 10 |
| C800X0030818 | 0,3 t - M8x18 | 0,6 | 1,2 | 0,3 | 0,6 | 0,42 | 0,3 | 0,3 | 0,63 | 0,45 | 0,3 | 10 |
| C800X0051018 | 0,5 t - M10x18 | 1 | 2 | 0,5 | 1 | 0,75 | 0,5 | 0,5 | 1 | 0,75 | 0,5 | 10 |
| C800X0071218 | 0,7 t - M12x18 | 1,4 | 2,4 | 0,7 | 1,4 | 1 | 0,7 | 0,7 | 1,4 | 1 | 0,7 | 10 |
| C800X0101420 | 1 t - M14x20 | 2 | 4 | 1 | 2 | 1,4 | 1 | 1 | 2,1 | 1,5 | 1 | 25 |
| C800X0141620 | 1,4 t - M16x20 | 2,8 | 5,6 | 1,4 | 2,8 | 2 | 1,4 | 1,4 | 3 | 2,1 | 1,4 | 30 |
| C800X0172030 | 1,7 t - M20x30 | 3,4 | 6,8 | 1,7 | 3,4 | 2,4 | 1,7 | 1,7 | 3,6 | 2,5 | 1,7 | 70 |
| C800X0172430 | 1,7 t - M24x30 | 3,4 | 6,8 | 1,7 | 3,4 | 2,4 | 1,7 | 1,7 | 3,6 | 2,5 | 1,7 | 70 |
| C800X0252030 | 2,5 t - M20x30 | 5 | 10 | 2,5 | 5 | 3,5 | 2,5 | 2,5 | 5,3 | 3,7 | 2,5 | 70 |
| C800X0402430 | 4 t - M24x30 | 8 | 16 | 4 | 8 | 5,6 | 4 | 4 | 8,4 | 6 | 4 | 150 |
| C800X0403035 | 4 t - M30x35 | 8 | 16 | 4 | 8 | 5,6 | 4 | 4 | 8,4 | 6 | 4 | 150 |
| C800X0673035 | 6,7 t - M30x35 | 12 | 24 | 6,7 | 13,4 | 9,4 | 6,7 | 6,7 | 14 | 10 | 6,7 | 225 |
| C800X0803045 | 8 t - M30x45 | 12,5 | 25 | 8 | 16 | 11,2 | 8 | 8 | 16,8 | 12 | 8 | 225 |
| C800X1003654 | 10 t - M36x54 | 15 | 30 | 10 | 20 | 14 | 10 | 10 | 21,2 | 15 | 10 | 410 |
| C800X1254263 | 12,5 t - M42x63 | 15 | 30 | 12,5 | 25 | 17,5 | 12,5 | 12,5 | 26,2 | 18,7 | 12,5 | 550 |
| C800X1254560 | 12,5 t - M45x60 | 15 | 30 | 12,5 | 25 | 17,5 | 12,5 | 12,5 | 26,2 | 18,7 | 12,5 | 550 |
| C800X1254872 | 12,5 t - M48x72 | 15 | 30 | 12,5 | 25 | 17,5 | 12,5 | 12,5 | 26,2 | 18,7 | 12,5 | 550 |
| C800X1604560 | 16 t - M45x60 | 25 | 50 | 16 | 30 | 21,2 | 16 | 16 | 31,5 | 22,4 | 15 | 550 |
| C800X1704860 | 17 t - M48x60 | 25 | 50 | 17 | 34 | 23,5 | 17 | 17 | 35,7 | 25,5 | 17 | 550 |
| C800X1805678 | 18 t - M56x78 | 25 | 50 | 18 | 36 | 25,2 | 18 | 18 | 37 | 27 | 18 | 800 |
| C800X2006496 | 20 t - M64x96 | 25 | 50 | 20 | 40 | 28 | 20 | 20 | 42,5 | 30 | 20 | 800 |
| C800X2806496 | 28 t - M64x96 | 32,5 | 84 | 28 | 56 | 39,2 | 28 | 28 | 58,8 | 42 | 28 | 800 |
| C800X31572108 | 31,5 t - M72x108 | 50 | 100 | 31,5 | 63 | 44,1 | 31,5 | 31,5 | 66,2 | 47,2 | 31,5 | 800 |
| C800X35080120 | 35 t - M80x120 | 50 | 100 | 35 | 70 | 49 | 35 | 35 | 73,5 | 52,5 | 35 | 1500 |
| C800X40090135 | 40 t - M90x135 | 50 | 100 | 40 | 80 | 56 | 40 | 40 | 85 | 60 | 40 | 2000 |

⚠ **NOT SUITABLE FOR CONTINUOUS ROTATING MOVEMENT DURING LOADING**

# CARTEC

## C811X

**HEAVY LIFT SWIVEL HOIST RING** - in axis pull with minimum overall dimensions with coefficent 5

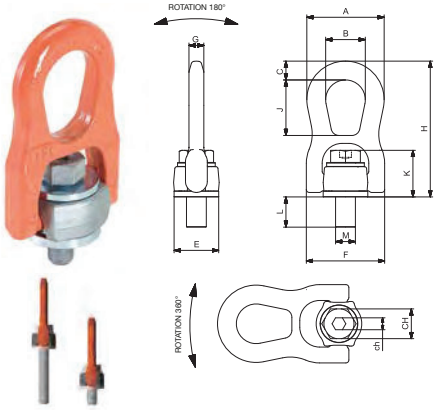


**FORESEEN USE**
**Anchorage point for load lifting.**

- Safety coefficient 5 in all loading directions
- Suitable for safe lifting in compliance with the machinery directive 2006/42/EC
- Can be oriented at 360°
- Tested at 100 % magnaflux
- Tested at 20.000 fatigue cycles
- The screw is protected with the GEOMET system which guarantees lasting protection in time
- Ideal for fastening at 90°
- Captive screws
- The screws are manufactured to allow use with universal hexagonal keys

Please use the devise with the screw supplied, if replaced CARCANO SPA disclaims any and all responsibility or liability.

**Available, on demand, not standard threading and stem length.**

**Available also with UNC thread.**

**Also available with interchangeable screw. In case of screw's replacement please use screws with the same mechanical characteristics to the one furnished along with the article.**

| Code | **Size** mm | **W.L.L.** t | **A** mm | **B** mm | **C** mm | **E** mm | **F** mm | **G** mm | **H** mm | **J** mm | **K** mm | **L** mm | **CH** mm | **ch** mm | **Weight** Kg |
|---|---|---|---|---|---|---|---|---|---|---|---|---|---|---|---|
| **C811X08** | M8 | 0,3 | 56 | 28 | 14 | 30 | 55 | 11 | 99 | 40 | 33,5 | 12 | 13 | 5 | 0,37 |
| **C811X10** | M10 | 0,6 | 56 | 28 | 14 | 30 | 55 | 11 | 99 | 40 | 34,5 | 15 | 17 | 6 | 0,37 |
| **C811X12** | M12 | 1 | 56 | 28 | 14 | 30 | 55 | 11 | 99 | 40 | 35,5 | 18 | 19 | 7 | 0,37 |
| **C811X14** | M14 | 1,3 | 74,5 | 38 | 18 | 47 | 78 | 17 | 135,5 | 55 | 46 | 21 | 22 | 7 | 1,3 |
| **C811X16** | M16 | 1,6 | 74,5 | 38 | 18 | 47 | 78 | 17 | 135,5 | 55 | 46,5 | 25 | 24 | 10 | 1,3 |
| **C811X18** | M18 | 2 | 74,5 | 38 | 18 | 47 | 78 | 17 | 135,5 | 55 | 47 | 27 | 27 | 10 | 1,3 |
| **C811X20** | M20 | 2,5 | 74,5 | 38 | 18 | 47 | 78 | 17 | 135,5 | 55 | 48 | 30 | 30 | 12 | 1,3 |
| **C811X22** | M22 | 3 | 106 | 56 | 25 | 62 | 114,5 | 22 | 198,5 | 84 | 63,5 | 33 | 32 | 12 | 4 |
| **C811X24** | M24 | 4 | 106 | 56 | 25 | 62 | 114,5 | 22 | 198,5 | 84 | 64,5 | 36 | 36 | 14 | 4 |
| **C811X27** | M27 | 5 | 106 | 56 | 25 | 62 | 114,5 | 22 | 198,5 | 84 | 66,5 | 40 | 41 | 14 | 4 |
| **C811X30** | M30 | 6,3 | 106 | 56 | 25 | 62 | 114,5 | 22 | 198,5 | 84 | 68 | 45 | 46 | 17 | 4 |

**Working load limit W.L.L. (t)**

| Code | **Size** mm | **Size** UNC | **0°** 1 leg | **0°** 2 legs | **90°** 1 leg | **90°** 2 legs | **0°- 45°** 2 legs | **45°- 60°** 2 legs | **Asymm** 2 legs | **0°- 45°** 3/4 legs | **45°- 60°** 3/4 legs | **Asymm** 3/4 legs | **Max tightening torque** Nm |
|---|---|---|---|---|---|---|---|---|---|---|---|---|---|
| **C811X08** | M8 | 5/16" - 18 | 0,5 | 1 | 0,3 | 0,6 | 0,4 | 0,3 | 0,3 | 0,6 | 0,45 | 0,3 | 10 |
| **C811X10** | M10 | 3/8" - 16 | 1 | 2 | 0,6 | 1,2 | 0,8 | 0,6 | 0,6 | 1,3 | 0,9 | 0,6 | 15 |
| **C811X12** | M12 | 1/2" - 13 | 1,3 | 2,6 | 1 | 2 | 1,4 | 1 | 1 | 2,1 | 1,5 | 1 | 25 |
| **C811X14** | M14 | | 2 | 4 | 1,3 | 2,6 | 1,8 | 1,3 | 1,3 | 2,7 | 1,9 | 1,3 | 30 |
| **C811X16** | M16 | 5/8" - 11 | 2,5 | 5 | 1,6 | 3,2 | 2,2 | 1,6 | 1,6 | 3,4 | 2,4 | 1,6 | 60 |
| **C811X18** | M18 | | 3 | 6 | 2 | 4 | 2,8 | 2 | 2 | 4,2 | 3 | 2 | 100 |
| **C811X20** | M20 | 3/4" - 10 | 3,5 | 7 | 2,5 | 5 | 3,5 | 2,5 | 2,5 | 5,3 | 3,7 | 2,5 | 120 |
| **C811X22** | M22 | 7/8" - 9 | 4,5 | 9 | 3 | 6 | 4,2 | 3 | 3 | 6,3 | 4,5 | 3 | 130 |
| **C811X24** | M24 | 1" - 8 | 5,5 | 11 | 4 | 8 | 5,6 | 4 | 4 | 8,4 | 6 | 4 | 200 |
| **C811X27** | M27 | 1 1/8" - 7 | 6,5 | 13 | 5 | 10 | 7 | 5 | 5 | 10,5 | 7,5 | 5 | 250 |
| **C811X30** | M30 | 1 1/4" - 7 | 7 | 14 | 6,3 | 12,6 | 8,8 | 6,3 | 6,3 | 13,2 | 9,4 | 6,3 | 350 |

**NOT ALLOWED**

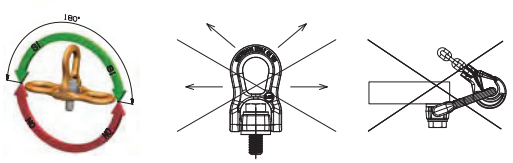


**THE DEVICE IS NOT SUITABLE FOR ROTATION DURING LOADING**

# CARTEC

NEW

## C811X H.T.

**HEAVY LIFT SWIVEL HOIST RING H.T.** - in axis pull with minimum overall dimensions

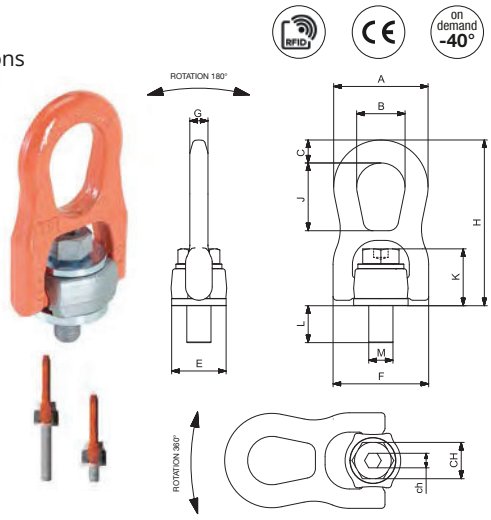


**FORESEEN USE**
**Anchorage point for load lifting.**

- Suitable for safe lifting in compliance with the machinery directive 2006/42/EC
- Can be oriented at 360°
- Tested at 100 % magnaflux
- Tested at 20.000 fatigue cycles
- The screw is protected with the GEOMET system which guarantees lasting protection in time
- Ideal for fastening at 90°
- Captive screws
- The screws are manufactured to allow use with universal hexagonal keys

Please use the devise with the screw supplied, if replaced CARCANO SPA disclaims any and all responsibility or liability.

**Available, on demand, not standard threading and stem length.**

**Available also with UNC thread.**

| Code | **Size** mm | **W.L.L. 5:1** t | **W.L.L. 4:1** t | **A** mm | **B** mm | **C** mm | **E** mm | **F** mm | **G** mm | **H** mm | **J** mm | **K** mm | **L** mm | **CH** mm | **ch** mm | **Weight** Kg |
|---|---|---|---|---|---|---|---|---|---|---|---|---|---|---|---|---|
| **C811XHT08** | M8 | 0,4 | 0,5 | 56 | 28 | 14 | 30 | 55 | 11 | 99 | 40 | 33,5 | 12 | 13 | 5 | 0,37 |
| **C811XHT10** | M10 | 0,7 | 0,9 | 56 | 28 | 14 | 30 | 55 | 11 | 99 | 40 | 34,5 | 15 | 17 | 6 | 0,37 |
| **C811XHT12** | M12 | 1,1 | 1,35 | 56 | 28 | 14 | 30 | 55 | 11 | 99 | 40 | 35,5 | 18 | 19 | 7 | 0,37 |
| **C811XHT14** | M14 | 1,4 | 1,8 | 74,5 | 38 | 18 | 47 | 78 | 17 | 135,5 | 55 | 46 | 21 | 22 | 7 | 1,3 |
| **C811XHT16** | M16 | 2 | 2,5 | 74,5 | 38 | 18 | 47 | 78 | 17 | 135,5 | 55 | 46,5 | 25 | 24 | 10 | 1,3 |
| **C811XHT18** | M18 | 2 | 2,5 | 74,5 | 38 | 18 | 47 | 78 | 17 | 135,5 | 55 | 47 | 27 | 27 | 10 | 1,3 |
| **C811XHT20** | M20 | 3,2 | 4 | 74,5 | 38 | 18 | 47 | 78 | 17 | 135,5 | 55 | 48 | 30 | 30 | 12 | 1,3 |
| **C811XHT22** | M22 | 3,5 | 4,5 | 106 | 56 | 25 | 62 | 114,5 | 22 | 198,5 | 84 | 63,5 | 33 | 32 | 12 | 4 |
| **C811XHT24** | M24 | 5 | 6,3 | 106 | 56 | 25 | 62 | 114,5 | 22 | 198,5 | 84 | 64,5 | 36 | 36 | 14 | 4 |
| **C811XHT27** | M27 | 5 | 6,3 | 106 | 56 | 25 | 62 | 114,5 | 22 | 198,5 | 84 | 66,5 | 40 | 41 | 14 | 4 |
| **C811XHT30** | M30 | 6,4 | 8 | 106 | 56 | 25 | 62 | 114,5 | 22 | 198,5 | 84 | 68 | 45 | 46 | 17 | 4 |

**Working load limit W.L.L. (t)**

W.L.L. (t) calculated with the safety coefficient 5.1

| Code | **Size** mm | **Size** UNC | **0°** 1 leg | **0°** 2 legs | **90°** 1 leg | **90°** 2 legs | **0°- 45°** 2 legs | **45°- 60°** 2 legs | **Asymm** 2 legs | **0°- 45°** 3/4 legs | **45°- 60°** 3/4 legs | **Asymm** 3/4 legs | **Max tightening torque** Nm |
|---|---|---|---|---|---|---|---|---|---|---|---|---|---|
| **C811XHT08** | M8 | 5/16" - 18 | 0,8 | 1,6 | 0,4 | 0,8 | 0,56 | 0,4 | 0,4 | 0,84 | 0,6 | 0,4 | 10 |
| **C811XHT10** | M10 | 3/8" - 16 | 1,3 | 2,6 | 0,7 | 1,4 | 0,98 | 0,7 | 0,7 | 1,47 | 1,05 | 0,7 | 15 |
| **C811XHT12** | M12 | 1/2" - 13 | 1,5 | 3 | 1,1 | 2,2 | 1,5 | 1,1 | 1,1 | 2,3 | 1,6 | 1,1 | 25 |
| **C811XHT14** | M14 | | 2,5 | 5 | 1,4 | 2,8 | 1,96 | 1,4 | 1,4 | 2,94 | 2,1 | 1,4 | 30 |
| **C811XHT16** | M16 | 5/8" - 11 | 2,7 | 5,4 | 2 | 4 | 2,8 | 2 | 2 | 4,25 | 3 | 2 | 60 |
| **C811XHT18** | M18 | | 2,7 | 5,4 | 2 | 4 | 2,8 | 2 | 2 | 4,25 | 3 | 2 | 100 |
| **C811XHT20** | M20 | 3/4" - 10 | 3,2 | 6,4 | 3,2 | 6,4 | 4,5 | 3,2 | 3,2 | 6,7 | 4,8 | 3,2 | 120 |
| **C811XHT22** | M22 | 7/8" - 9 | 5,5 | 11 | 3,5 | 7 | 4,9 | 3,5 | 3,5 | 7,35 | 5,25 | 3,5 | 130 |
| **C811XHT24** | M24 | 1" - 8 | 6 | 12 | 5 | 10 | 7,1 | 5 | 5 | 10,6 | 7,5 | 5 | 200 |
| **C811XHT27** | M27 | 1 1/8" - 7 | 6 | 12 | 5 | 10 | 7,1 | 5 | 5 | 10,6 | 7,5 | 5 | 250 |
| **C811XHT30** | M30 | 1 1/4" - 7 | 9 | 18 | 6,4 | 12,8 | 9 | 6,4 | 6,4 | 13,5 | 9,6 | 6,4 | 350 |

W.L.L. (t) marked on the eyebolt calculated with the safety coefficient 4.1

| | | | | | | | | | | | | | |
|---|---|---|---|---|---|---|---|---|---|---|---|---|---|
| **C811XHT08** | M8 | 5/16" - 18 | 1 | 2 | 0,5 | 1 | 0,7 | 0,5 | 0,5 | 1,05 | 0,75 | 0,5 | 10 |
| **C811XHT10** | M10 | 3/8" - 16 | 1,5 | 3 | 0,9 | 1,8 | 1,26 | 0,9 | 0,9 | 1,9 | 1,35 | 0,9 | 15 |
| **C811XHT12** | M12 | 1/2" - 13 | 1,5 | 3 | 1,35 | 2,7 | 1,9 | 1,35 | 1,35 | 2,84 | 2 | 1,35 | 25 |
| **C811XHT14** | M14 | | 2,6 | 5,2 | 1,8 | 3,6 | 2,5 | 1,8 | 1,8 | 3,8 | 2,7 | 1,8 | 30 |
| **C811XHT16** | M16 | 5/8" - 11 | 2,8 | 5,6 | 2,5 | 5 | 3,5 | 2,5 | 2,5 | 5,25 | 3,75 | 2,5 | 60 |
| **C811XHT18** | M18 | | 2,8 | 5,6 | 2,5 | 5 | 3,5 | 2,5 | 2,5 | 5,25 | 3,75 | 2,5 | 100 |
| **C811XHT20** | M20 | 3/4" - 10 | 4 | 8 | 4 | 8 | 5,6 | 4 | 4 | 8,4 | 6 | 4 | 120 |
| **C811XHT22** | M22 | 7/8" - 9 | 6 | 12 | 4,5 | 9 | 6,3 | 4,5 | 4,5 | 9,45 | 6,75 | 4,5 | 130 |
| **C811XHT24** | M24 | 1" - 8 | 6,5 | 13 | 6,3 | 12,6 | 8,8 | 6,3 | 6,3 | 13,2 | 9,5 | 6,3 | 200 |
| **C811XHT27** | M27 | 1 1/8" - 7 | 6,5 | 13 | 6,3 | 12,6 | 8,8 | 6,3 | 6,3 | 13,2 | 9,5 | 6,3 | 250 |
| **C811XHT30** | M30 | 1 1/4" - 7 | 9 | 18 | 8 | 16 | 11,2 | 8 | 8 | 17 | 11,8 | 8 | 350 |

**NOT ALLOWED**

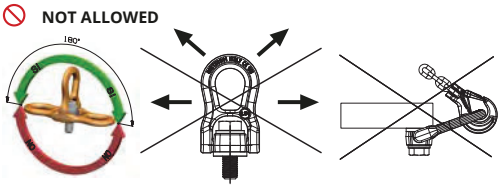


⚠ **THE DEVICE IS NOT SUITABLE FOR ROTATION DURING LOADING**

# CARTEC

## C812X

**HEAVY LIFT SWIVEL HOIST RING** - can be oriented during loading

**FORESEEN USE**
**Anchorage point for load lifting.**

- Safety coefficient 4 in all loading directions
- Suitable for safe lifting in compliance with the machinery directive 2006/42/EC
- Can be oriented at 360°
- Tested at 100 % magnaflux
- Tested according to EN 1677
- Ideal for fastening at 90°
- Captive screws
- The screws are manufactured to allow use with universal hexagonal keys

**Available, on demand, not standard threading and stem length.**

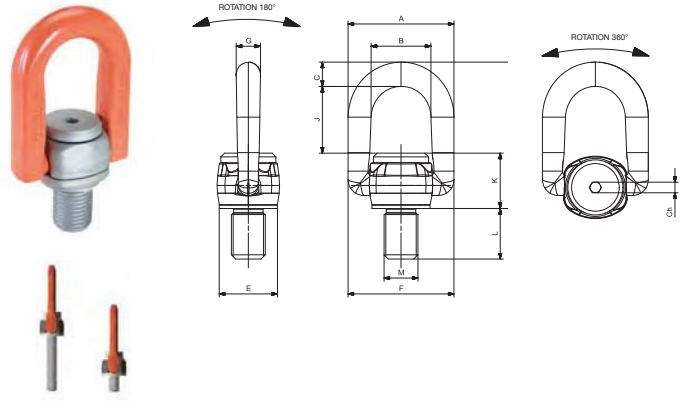


| Code | Size mm | W.L.L. t | A mm | B mm | C mm | E mm | F mm | G mm | H mm | J mm | K mm | L mm | ch mm | Weight Kg |
|---|---|---|---|---|---|---|---|---|---|---|---|---|---|---|
| C812X33 | M33 | 8 | 150 | 85 | 32 | 76,5 | 150 | 32 | 220 | 108 | 80 | 50 | 17 | 6 |
| C812X36 | M36 | 10 | 150 | 85 | 32 | 76,5 | 150 | 32 | 220 | 108 | 80 | 54 | 17 | 6 |
| C812X39 | M39 | 10 | 150 | 85 | 32 | 76,5 | 150 | 32 | 220 | 108 | 80 | 58 | 17 | 6 |
| C812X42 | M42 | 12,5 | 150 | 85 | 32 | 76,5 | 150 | 32 | 220 | 108 | 80 | 63 | 17 | 6 |
| C812X45 | M45 | 15 | 176 | 100 | 39 | 95 | 176 | 39 | 257 | 128 | 90 | 63 | 17 | 10,5 |
| C812X48 | M48 | 17 | 176 | 100 | 39 | 95 | 176 | 39 | 257 | 128 | 90 | 68 | 17 | 10,5 |
| C812X52 | M52 | 20 | 176 | 100 | 39 | 95 | 176 | 39 | 257 | 128 | 90 | 68 | 17 | 10,5 |
| C812X56 | M56 | 25 | 200 | 113 | 46 | 110 | 200 | 46 | 277 | 126 | 105 | 78 | 19 | 16,3 |
| C812X64 | M64 | 35 | 200 | 113 | 46 | 110 | 200 | 46 | 277 | 126 | 105 | 90 | 19 | 16,3 |
| C812X72 | M72 | 25 | 200 | 113 | 46 | 110 | 200 | 46 | 277 | 126 | 105 | 78 | 19 | 16,3 |
| C812X80 | M80 | 35 | 200 | 113 | 46 | 110 | 200 | 46 | 277 | 126 | 105 | 90 | 19 | 16,3 |
| C812X90 | M90 | 35 | 200 | 113 | 46 | 110 | 200 | 46 | 277 | 126 | 105 | 90 | 19 | 16,3 |
| C812X100 | M100 | 35 | 200 | 113 | 46 | 110 | 200 | 46 | 277 | 126 | 105 | 90 | 19 | 16,3 |

**Working load limit W.L.L. (t)**

| Code | Size mm | 0° 1 leg | 0° 2 legs | 90° 1 leg | 90° 2 legs | 0°- 45° 2 legs | 45°- 60° 2 legs | Asymm 2 legs | 0°- 45° 3/4 legs | 45°- 60° 3/4 legs | Asymm 3/4 legs | Max tightening torque Nm |
|---|---|---|---|---|---|---|---|---|---|---|---|---|
| C812X33 | M33 | 8 | 16 | 8 | 16 | 11,2 | 8 | 8 | 16,8 | 12 | 8 | 600 |
| C812X36 | M36 | 10 | 20 | 10 | 20 | 14 | 10 | 10 | 21 | 15 | 10 | 814 |
| C812X39 | M39 | 10 | 20 | 10 | 20 | 14 | 10 | 10 | 21 | 15 | 10 | 814 |
| C812X42 | M42 | 12,5 | 25 | 12,5 | 25 | 17,5 | 12,5 | 12,5 | 26,3 | 18,8 | 12,5 | 1304 |
| C812X45 | M45 | 15 | 30 | 15 | 30 | 21 | 15 | 15 | 32 | 22,5 | 15 | 1670 |
| C812X48 | M48 | 20 | 40 | 20 | 40 | 28 | 20 | 20 | 42 | 25,5 | 20 | 1981 |
| C812X52 | M52 | 20 | 40 | 20 | 40 | 28 | 20 | 20 | 42 | 30 | 20 | 1981 |
| C812X56 | M56 | 25 | 50 | 25 | 50 | 35 | 25 | 25 | 52,5 | 37,5 | 25 | 3000 |
| C812X64 | M64 | 35 | 70 | 35 | 70 | 49 | 35 | 35 | 73,5 | 52,5 | 35 | 4738 |
| C812X72 | M72 | 25 | 50 | 25 | 50 | 35 | 25 | 25 | 52,5 | 25 | 25 | 6913 |
| C812X80 | M80 | 35 | 70 | 35 | 70 | 49 | 35 | 35 | 73,5 | 52,5 | 35 | 9625 |
| C812X90 | M90 | 35 | 70 | 35 | 70 | 49 | 35 | 35 | 73,5 | 52,5 | 35 | 14000 |
| C812X100 | M100 | 35 | 70 | 35 | 70 | 49 | 35 | 35 | 73,5 | 52,5 | 35 | 14000 |

**NOT ALLOWED**

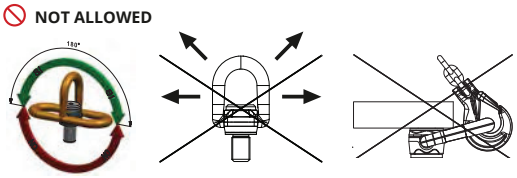

⚠ **THE DEVICE IS NOT SUITABLE FOR ROTATION DURING LOADING**

# CARTEC

NEW

## C813X PERFORMER

**PERFORMER HEAVY LIFT SWIVEL HOIST RING** - QR code for instructions download

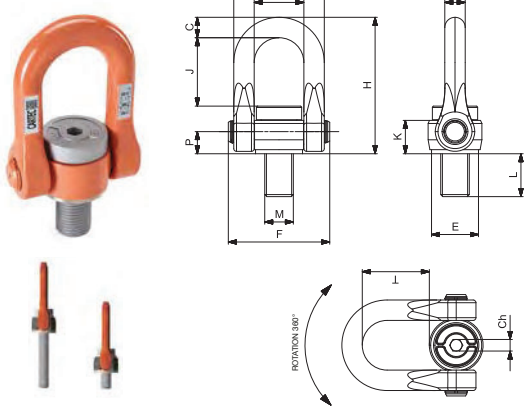


**FORESEEN USE**
**Anchorage point for load lifting.**

- Safety coefficient 4 in all loading directions
- Suitable for safe lifting in compliance with the machinery directive 2006/42/EC
- Can be oriented at 360°
- Tested at 100 % magnaflux
- Tested according to EN 1677Ideal for fastening at 90°
- Captive screws
- The screws are manufactured to allow use with universal hexagonal keys

**Available, on demand, not standard threading and stem length.**

**Available also with UNC thread.**

| Code | **Size M**<br>mm | **W.L.L.**<br>t | **A**<br>mm | **B**<br>mm | **C**<br>mm | **E**<br>mm | **F**<br>mm | **G**<br>mm | **H**<br>mm | **J**<br>mm | **K**<br>mm | **L**<br>mm | **P**<br>mm | **T**<br>mm | **Ch**<br>mm | **Weight**<br>Kg |
|---|---|---|---|---|---|---|---|---|---|---|---|---|---|---|---|---|
| **C813X33** | M33 | 10,5 | 131 | 71 | 30 | 69 | 149 | 30 | 199 | 100 | 49 | 50 | 32,5 | 97 | 17 | 5,6 |
| **C813X36** | M36 | 12 | 131 | 71 | 30 | 69 | 149 | 30 | 199 | 100 | 49 | 54 | 32,5 | 97 | 17 | 5,8 |
| **C813X39** | M39 | 14 | 131 | 71 | 30 | 69 | 149 | 30 | 199 | 100 | 49 | 58 | 32,5 | 97 | 17 | 5,9 |
| **C813X42** | M42 | 15 | 131 | 71 | 30 | 69 | 149 | 30 | 199 | 100 | 49 | 63 | 32,5 | 97 | 17 | 6 |
| **C813X45** | M45 | 16 | 131 | 71 | 30 | 69 | 149 | 30 | 199 | 100 | 49 | 63 | 32,5 | 97 | 17 | 6,1 |
| **C813X48** | M48 | 20 | 164 | 92 | 40 | 89 | 182 | 40 | 249 | 122 | 63 | 68 | 40 | 119 | 19 | 11,6 |
| **C813X52** | M52 | 21 | 164 | 92 | 40 | 89 | 182 | 40 | 249 | 122 | 63 | 68 | 40 | 119 | 19 | 11,8 |
| **C813X56** | M56 | 25 | 164 | 92 | 40 | 89 | 182 | 40 | 249 | 122 | 63 | 78 | 40 | 119 | 19 | 12,1 |
| **C813X64** | M64 | 32,1 | 164 | 92 | 40 | 89 | 182 | 40 | 249 | 122 | 63 | 90 | 40 | 119 | 19 | 12,9 |
| **C813X72** | M72 | 25 | 164 | 92 | 40 | 89 | 182 | 40 | 249 | 122 | 63 | 78 | 40 | 119 | 19 | 15,1 |
| **C813X80** | M80 | 32,1 | 164 | 92 | 40 | 89 | 182 | 40 | 249 | 122 | 63 | 90 | 40 | 119 | 19 | 15,9 |
| **C813X90** | M90 | 32,1 | 164 | 92 | 40 | 89 | 182 | 40 | 249 | 122 | 63 | 90 | 40 | 119 | 19 | 16,9 |
| **C813X100** | M100 | 32,1 | 164 | 92 | 40 | 89 | 182 | 40 | 249 | 122 | 63 | 90 | 40 | 119 | 19 | 16,9 |

**Working load limit W.L.L. (t)**

| Code | **Size**<br>mm | **Size**<br>UNC | **0°**<br>1 leg | **0°**<br>2 legs | **90°**<br>1 leg | **90°**<br>2 legs | **0°- 45°**<br>2 legs | **45°- 60°**<br>2 legs | **Asymm**<br>2 legs | **0°- 45°**<br>3/4 legs | **45°- 60°**<br>3/4 legs | **Asymm**<br>3/4 legs | **Max tightening torque**<br>Nm |
|---|---|---|---|---|---|---|---|---|---|---|---|---|---|
| **C813X33** | M33 | | 14,5 | 29 | 10,5 | 21 | 14,7 | 10,5 | 10,5 | 22 | 15,75 | 10,5 | 600 |
| **C813X36** | M36 | 1 1/2" - 6 | 15 | 30 | 12 | 24 | 16,8 | 12 | 12 | 25,2 | 18 | 12 | 814 |
| **C813X39** | M39 | | 17 | 34 | 14 | 28 | 19,6 | 14 | 14 | 29,4 | 21 | 14 | 814 |
| **C813X42** | M42 | 1 3/4" - 5 | 16 | 32 | 15 | 30 | 21 | 15 | 15 | 31,5 | 22,5 | 15 | 1304 |
| **C813X45** | M45 | | 16 | 32 | 16 | 32 | 22,4 | 16 | 16 | 33,6 | 24 | 16 | 1670 |
| **C813X48** | M48 | 2" - 4,5 | 22 | 44 | 20 | 40 | 28 | 20 | 20 | 42 | 30 | 20 | 1981 |
| **C813X52** | M52 | | 23 | 46 | 21 | 42 | 29,4 | 21 | 21 | 44,1 | 31,5 | 21 | 1981 |
| **C813X56** | M56 | 2 1/2" - 4 | 25 | 50 | 25 | 50 | 35 | 25 | 25 | 52,5 | 37,5 | 25 | 3000 |
| **C813X64** | M64 | | 32,1 | 64,2 | 32,1 | 64,2 | 44,94 | 32,1 | 32,1 | 67,4 | 48,2 | 32,1 | 4738 |
| **C813X72** | M72 | | 25 | 50 | 25 | 50 | 35 | 25 | 25 | 52,5 | 37,5 | 25 | 4738 |
| **C813X80** | M80 | | 32,1 | 64,2 | 32,1 | 64,2 | 44,94 | 32,1 | 32,1 | 67,4 | 48,2 | 32,1 | 4738 |
| **C813X90** | M90 | | 32,1 | 64,2 | 32,1 | 64,2 | 44,94 | 32,1 | 32,1 | 67,4 | 48,2 | 32,1 | 4738 |
| **C813X100** | M100 | | 32,1 | 64,2 | 32,1 | 64,2 | 44,94 | 32,1 | 32,1 | 67,4 | 48,2 | 32,1 | 4738 |

**NOT ALLOWED**

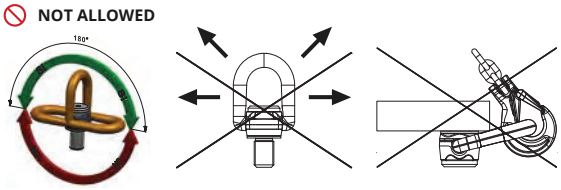


⚠ **THE DEVICE IS NOT SUITABLE FOR ROTATION DURING LOADING**

# CARTEC

## C806X

**ROTATING EYEBOLT WITH CLAMP** - pull at 90° with minimum overall dimensions

**FORESEEN USE**
**Anchorage point for load lifting.**

- Safety coefficient 4 in all loading directions
- Designed, tested and certified in compliance with the technical directives GS-OA 15-04 – EN 1677
- Suitable for safe lifting in compliance with the machinery directive 2006/42/EC
- Can be oriented at 360°
- Tested at 100 % magnaflux
- Tested at 20.000 fatigue cycles
- The screw is protected with the GEOMET system which guarantees lasting protection in time
- Non standard threading and stem length upon request
- Ideal for fastening at 90°
- Captive screws
- The screws from M36 and above are manufactured to allow use with universal hexagonal keys.

Accordingly with the requirements of "DGUV – German institution for security" please use the devise with the screw supplied, if replaced CARCANO SPA disclaims any and all responsibility or liability.

**Available, on demand, not standard threading and stem length.**

**Also available with interchangeable screw. In case of screw's replacement please use screws with the same mechanical characteristics to the one furnished along with the article.**



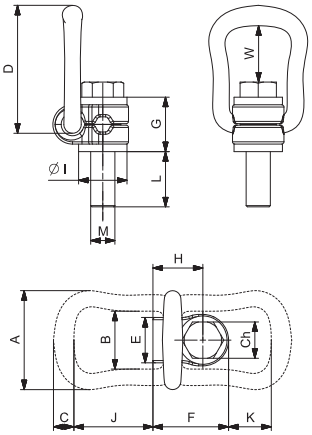





| Code | Size mm | W.L.L. t | A mm | B mm | C mm | D mm | E mm | F mm | G mm | H mm | I mm | L mm | W mm | J mm | K mm | Ch mm | Weight Kg |
|---|---|---|---|---|---|---|---|---|---|---|---|---|---|---|---|---|---|
| C806X08 | M8 | 0,3 | 57 | 34 | 10 | 78 | 24 | 41 | 30 | 26,5 | 25 | 15 | 43 | 51 | 35 | 13 | 0,27 |
| C806X10 | M10 | 0,63 | 57 | 34 | 10 | 78 | 24 | 41 | 30 | 26,5 | 25 | 15 | 42 | 51 | 35 | 17 | 0,29 |
| C806X12 | M12 | 1 | 66 | 38 | 13,5 | 85 | 30 | 50 | 36 | 33 | 32 | 23 | 40 | 52 | 28 | 19 | 0,5 |
| C806X16 | M16 | 1,5 | 66 | 38 | 13,5 | 85 | 30 | 50 | 36 | 33 | 32 | 24 | 38 | 52 | 28 | 24 | 0,51 |
| C806X20 | M20 | 2,5 | 87 | 55 | 16 | 111 | 48 | 68 | 44 | 42,5 | 45 | 31 | 54 | 71 | 36 | 30 | 1,25 |
| C806X24 | M24 | 4 | 87 | 55 | 16 | 111 | 48 | 68 | 44 | 42,5 | 45 | 37 | 51 | 71 | 36 | 36 | 1,3 |
| C806X27 | M27 | 4 | 109 | 66 | 22,5 | 145 | 54 | 91 | 63 | 58,5 | 60 | 37 | 64 | 86 | 47 | 41 | 3,15 |
| C806X30 | M30 | 5 | 109 | 66 | 22,5 | 145 | 54 | 91 | 65 | 58,5 | 60 | 45 | 62 | 86 | 47 | 46 | 3,25 |
| C806X36T07 | M36 | 7 | 109 | 66 | 22,5 | 145 | 54 | 91 | 55 | 58,5 | 60 | 50 | 60 | 86 | 43 | 55 | 3,3 |
| C806X36 | M36 | 8 | 136 | 78 | 28 | 190 | 62 | 108 | 81 | 72,5 | 70 | 59 | 88 | 115 | 74 | 55 | 5,9 |
| C806X42T10 | M42 | 10 | 136 | 78 | 28 | 190 | 62 | 108 | 75 | 72,5 | 70 | 75 | 86 | 115 | 70 | 65 | 6,5 |
| C806X42 | M42 | 15 | 169 | 97 | 36 | 242 | 68 | 131 | 89 | 87,5 | 85 | 63 | 121 | 151 | 97 | 65 | 11,2 |
| C806X48 | M48 | 20 | 169 | 97 | 36 | 242 | 68 | 131 | 89 | 87,5 | 95 | 71 | 117 | 151 | 93 | 75 | 11,6 |

**Working load limit W.L.L. (t)**

| Code | Size mm | 0° 1 leg | 0° 2 legs | 90° 1 leg | 90° 2 legs | 0°- 45° 2 legs | 45°- 60° 2 legs | Asymm 2 legs | 0°- 45° 3/4 legs | 45°- 60° 3/4 legs | Asymm 3/4 legs | Max tightening torque Nm |
|---|---|---|---|---|---|---|---|---|---|---|---|---|
| C806X08 | M8 | 0,3 | 0,6 | 0,3 | 0,6 | 0,42 | 0,3 | 0,3 | 0,63 | 0,45 | 0,3 | 30 |
| C806X10 | M10 | 0,63 | 1,26 | 0,63 | 1,26 | 0,88 | 0,63 | 0,63 | 1,32 | 0,95 | 0,63 | 60 |
| C806X12 | M12 | 1 | 2 | 1 | 2 | 1,4 | 1 | 1 | 2,1 | 1,5 | 1 | 100 |
| C806X16 | M16 | 1,5 | 3 | 1,5 | 3 | 2,1 | 1,5 | 1,5 | 3,15 | 2,25 | 1,5 | 150 |
| C806X20 | M20 | 2,5 | 5 | 2,5 | 5 | 3,5 | 2,5 | 2,5 | 5,25 | 3,75 | 2,5 | 250 |
| C806X24 | M24 | 4 | 8 | 4 | 8 | 5,6 | 4 | 4 | 8,4 | 6 | 4 | 400 |
| C806X27 | M27 | 4 | 8 | 4 | 8 | 5,6 | 4 | 4 | 8,4 | 6 | 4 | 400 |
| C806X30 | M30 | 5 | 10 | 5 | 10 | 7 | 5 | 5 | 10,5 | 7,5 | 5 | 500 |
| C806X36T07 | M36 | 7 | 14 | 7 | 14 | 9,8 | 7 | 7 | 14,7 | 10,4 | 7 | 700 |
| C806X36 | M36 | 8 | 16 | 8 | 16 | 11,2 | 8 | 8 | 16,8 | 12 | 8 | 800 |
| C806X42T10 | M42 | 10 | 20 | 10 | 20 | 14 | 10 | 10 | 21 | 15 | 10 | 925 |
| C806X42 | M42 | 15 | 30 | 15 | 30 | 21 | 15 | 15 | 31,5 | 22,5 | 15 | 1500 |
| C806X48 | M48 | 20 | 40 | 20 | 40 | 28 | 20 | 20 | 42 | 30 | 20 | 2000 |

**NOT ALLOWED**

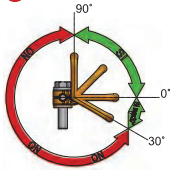


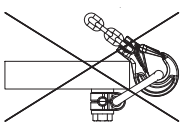

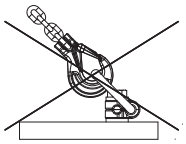

⚠ **THE DEVICE IS NOT SUITABLE FOR ROTATION DURING LOADING**

# CARTEC

NEW

## C806X H.T.

**ROTATING EYEBOLT WITH CLAMP** - pull at 90° with minimum overall dimensions

**FORESEEN USE**
**Anchorage point for load lifting.**

- Safety coefficient 4 in all loading directions
- Designed, tested and certified in compliance with the technical directives GS-OA 15-04 – EN 1677
- Suitable for safe lifting in compliance with the machinery directive 2006/42/EC
- Can be oriented at 360°
- Tested at 100 % magnaflux
- Tested at 20.000 fatigue cycles
- The screw is protected with the GEOMET system which guarantees lasting protection in time
- Non standard threading and stem length upon request
- Ideal for fastening at 90°
- Captive screws
- The screws from M36 and above are manufactured to allow use with universal hexagonal keys.

Accordingly with the requirements of "DGUV – German institution for security" please use the devise with the screw supplied, if replaced CARCANO SPA disclaims any and all responsibility or liability.

**Available, on demand, not standard threading and stem length.**

**Available also with UNC thread.**



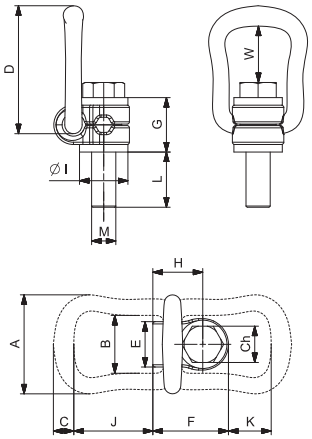


| Code | Size mm | A mm | B mm | C mm | D mm | E mm | F mm | G mm | H mm | I mm | L mm | W mm | J mm | K mm | Ch mm | Weight Kg | W.L.L. t |
|---|---|---|---|---|---|---|---|---|---|---|---|---|---|---|---|---|---|
| C806XHT08 | M8 | 57 | 34 | 10 | 78 | 24 | 41 | 30 | 26,5 | 25 | 15 | 43 | 51 | 35 | 13 | 0,27 | 0,5 |
| C806XHT10 | M10 | 57 | 34 | 10 | 78 | 24 | 41 | 30 | 26,5 | 25 | 15 | 42 | 51 | 35 | 17 | 0,29 | 0,9 |
| C806XHT12 | M12 | 66 | 38 | 13,5 | 85 | 30 | 50 | 36 | 33 | 32 | 23 | 40 | 52 | 28 | 19 | 0,5 | 1,35 |
| C806XHT16 | M16 | 66 | 38 | 13,5 | 85 | 30 | 50 | 36 | 33 | 32 | 24 | 38 | 52 | 28 | 24 | 0,51 | 2 |
| C806XHT20 | M20 | 87 | 55 | 16 | 111 | 48 | 68 | 44 | 42,5 | 45 | 31 | 54 | 71 | 36 | 30 | 1,25 | 3,5 |
| C806XHT24 | M24 | 87 | 55 | 16 | 111 | 48 | 68 | 44 | 42,5 | 45 | 37 | 51 | 71 | 36 | 36 | 1,3 | 4,5 |
| C806XHT27 | M27 | 109 | 66 | 22,5 | 145 | 54 | 91 | 63 | 58,5 | 60 | 37 | 64 | 86 | 47 | 46 | 3,15 | 4 |
| C806XHT30 | M30 | 109 | 66 | 22,5 | 145 | 54 | 91 | 65 | 58,5 | 60 | 45 | 62 | 86 | 47 | 46 | 3,25 | 6,7 |
| C806XHT36T07 | M36 | 109 | 66 | 22,5 | 145 | 54 | 91 | 55 | 58,5 | 60 | 50 | 60 | 86 | 43 | 55 | 3,3 | 7 |
| C806XHT36 | M36 | 136 | 78 | 28 | 190 | 62 | 108 | 81 | 72,5 | 70 | 59 | 88 | 115 | 74 | 55 | 5,9 | 8 |
| C806XHT42T10 | M42 | 136 | 78 | 28 | 190 | 62 | 108 | 75 | 72,5 | 70 | 75 | 86 | 115 | 70 | 65 | 6,5 | 10 |
| C806XHT42 | M42 | 169 | 97 | 36 | 242 | 68 | 131 | 89 | 87,5 | 85 | 63 | 121 | 151 | 97 | 65 | 11,2 | 15 |
| C806XHT48 | M48 | 169 | 97 | 36 | 242 | 68 | 131 | 89 | 87,5 | 95 | 71 | 117 | 151 | 93 | 75 | 11,6 | 20 |

**Working load limit W.L.L. (t)**

| Code | Size mm | Size UNC | 0° 1 leg | 0° 2 legs | 90° 1 leg | 90° 2 legs | 0°- 45° 2 legs | 45°- 60° 2 legs | Asymm 2 legs | 0°- 45° 3/4 legs | 45°- 60° 3/4 legs | Asymm 3/4 legs | Max tightening torque Nm |
|---|---|---|---|---|---|---|---|---|---|---|---|---|---|
| C806XHT08 | M8 | 5/16" - 18 | 0,5 | 1 | 0,5 | 1 | 0,7 | 0,5 | 0,5 | 1,05 | 0,75 | 0,5 | 30 |
| C806XHT10 | M10 | 3/8" - 16 | 0,9 | 1,8 | 0,9 | 1,8 | 1,3 | 0,9 | 0,9 | 1,9 | 1,35 | 0,9 | 60 |
| C806XHT12 | M12 | 1/2" - 13 | 1,35 | 2,7 | 1,35 | 2,7 | 1,9 | 1,35 | 1,35 | 2,84 | 2 | 1,35 | 100 |
| C806XHT16 | M16 | 5/8" - 11 | 2 | 4 | 2 | 4 | 2,8 | 2 | 2 | 4,25 | 3 | 2 | 150 |
| C806XHT20 | M20 | 3/4" - 10 | 3,5 | 7 | 3,5 | 7 | 4,9 | 3,5 | 3,5 | 7,35 | 5,25 | 3,5 | 250 |
| C806XHT20 | M20 | 7/8" - 9 | 3,5 | 7 | 3,5 | 7 | 4,9 | 3,5 | 3,5 | 7,35 | 5,25 | 3,5 | 250 |
| C806XHT24 | M24 | 1" - 8 | 4,5 | 9 | 4,5 | 9 | 6,3 | 4,5 | 4,5 | 9,5 | 6,75 | 4,5 | 400 |
| C806XHT27 | M27 | | 4 | 8 | 4 | 8 | 5,6 | 4 | 4 | 6,4 | 6 | 4 | 400 |
| C806XHT30 | M30 | 1 1/4" - 7 | 6,7 | 13,4 | 6,7 | 13,4 | 9,5 | 6,7 | 6,7 | 14,1 | 10 | 6,7 | 500 |
| C806XHT36T07 | M36 | | 7 | 14 | 7 | 14 | 9,8 | 7 | 7 | 14,7 | 10,4 | 7 | 700 |
| C806XHT36 | M36 | 1 1/2" - 6 | 8 | 16 | 8 | 16 | 11,2 | 8 | 8 | 16,8 | 12 | 8 | 800 |
| C806XHT42T10 | M42 | | 10 | 20 | 10 | 20 | 14 | 10 | 10 | 21 | 15 | 10 | 925 |
| C806XHT42 | M42 | | 15 | 30 | 15 | 30 | 21 | 15 | 15 | 31,5 | 22,5 | 15 | 1500 |
| C806XHT48 | M48 | 2" - 4,5 | 20 | 40 | 20 | 40 | 28 | 20 | 20 | 42 | 30 | 20 | 2000 |

**NOT ALLOWED**

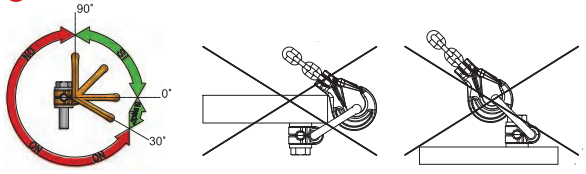


⚠ **THE DEVICE IS NOT SUITABLE FOR ROTATION DURING LOADING**

# CARTEC

## C807X

**ROTATING EYEBOLT H.Q.** - can be oriented for every loading direction

**FORESEEN USE**
**Anchorage point for load lifting.**

- Safety coefficient 4 in all loading directions
- Designed, tested and certified in compliance with the technical directives GS-OA 15-04 – EN 1677
- Suitable for safe lifting in compliance with the machinery directive 2006/42/EC
- Can be oriented at 360°
- Tested at 100 % magnaflux
- Tested at 20.000 fatigue cycles
- Ideal for fastening at 90°
- Captive screws
- On the axial pull there can be variation of +/-5° with a 10% decrease in capacity



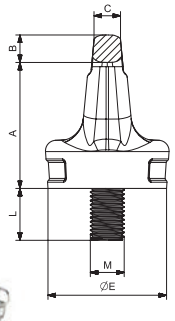


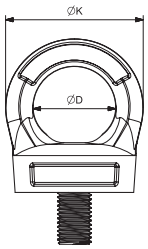






**KEY KIT 807** - Special key for sizes from M8 to M30

| Code | Accessory of use |
|---|---|
| CK807X08 | 807M08 |
| CK807X10 | 807M10 |
| CK807X12 | 807M12 |
| CK807X16 | 807M16 |
| CK807X20 | 807M20 |
| CK807X24 | 807M24 |
| CK807X30 | 807M30 |
| CK807X36* | 807M36 |
| CK807X42* | 807M42 |
| CK807X48* | 807M48 |

* Commercial key without ring and chain

| Code without key | Code with key | **Size** mm | **W.L.L.** t | **A** mm | **B** mm | **C** mm | **D** Ø mm | **E** Ø mm | **K** Ø mm | **L** mm | **Weight** Kg |
|---|---|---|---|---|---|---|---|---|---|---|---|
| C807X08 | C807XC08 | M8 | 0,3 | 44,5 | 8 | 10 | 29 | 32 | 45 | 12 | 0,3 |
| C807X10 | C807XC10 | M10 | 0,4 | 44,5 | 8 | 10 | 29 | 32 | 45 | 16 | 0,3 |
| C807X12 | C807XC12 | M12 | 0,75 | 53,5 | 11 | 11 | 34 | 44 | 56 | 18 | 0,46 |
| C807X16 | C807XC16 | M16 | 1,5 | 56,5 | 13 | 14,5 | 39 | 56 | 65 | 24 | 0,9 |
| C807X20 | C807XC20 | M20 | 2,3 | 67 | 14 | 17 | 42 | 58 | 70 | 30 | 1,15 |
| C807X24 | C807XC24 | M24 | 3,2 | 80 | 18 | 19 | 52 | 73 | 88 | 36 | 2,05 |
| C807X30 | C807XC30 | M30 | 4,5 | 101 | 22 | 27 | 62 | 80 | 106 | 43 | 3,12 |
| C807X36 | C807XC36 | M36 | 7 | 125 | 37 | 38 | 80 | 95 | 154 | 54 | 6,7 |
| C807X42 | C807XC42 | M42 | 9 | 148 | 40 | 41 | 90 | 105 | 170 | 64 | 9,5 |
| C807X48 | C807XC48 | M48 | 12 | 165 | 45 | 47 | 95 | 120 | 185 | 72 | 13,5 |

**Working load limit W.L.L. (t)**

| Code without key | Code with key | **Size** mm | **0°** 1 leg | **0°** 2 leg | **90°** 1 leg | **90°** 2 legs | **0°- 45°** 2 legs | **45°- 60°** 2 legs | **Asymm** 2 legs | **0°- 45°** 3/4 legs | **45°- 60°** 3/4 legs | **Asymm** 3/4 legs | **Max tightening torque** Nm |
|---|---|---|---|---|---|---|---|---|---|---|---|---|---|
| C807X08 | C807XC08 | M8 | 1 | 2 | 0,3 | 0,6 | 0,42 | 0,3 | 0,3 | 0,63 | 0,45 | 0,3 | 8 |
| C807X10 | C807XC10 | M10 | 1 | 2 | 0,4 | 0,8 | 0,56 | 0,4 | 0,4 | 0,84 | 0,6 | 0,4 | 16 |
| C807X12 | C807XC12 | M12 | 2 | 4 | 0,75 | 1,5 | 1 | 0,75 | 0,75 | 1,6 | 1,12 | 0,75 | 28 |
| C807X16 | C807XC16 | M16 | 4 | 8 | 1,5 | 3 | 2 | 1,5 | 1,5 | 3,15 | 2,25 | 1,5 | 70 |
| C807X20 | C807XC20 | M20 | 6 | 12 | 2,3 | 4,6 | 3,22 | 2,3 | 2,3 | 4,83 | 3,45 | 2,3 | 135 |
| C807X24 | C807XC24 | M24 | 8 | 16 | 3,2 | 6,4 | 4,48 | 3,2 | 3,2 | 6,7 | 4,8 | 3,2 | 230 |
| C807X30 | C807XC30 | M30 | 12 | 24 | 4,5 | 9 | 6,3 | 4,5 | 4,5 | 9,4 | 6,7 | 4,5 | 465 |
| C807X36 | C807XC36 | M36 | 16 | 32 | 7 | 14 | 9,8 | 7 | 7 | 14,7 | 10,5 | 7 | 814 |
| C807X42 | C807XC42 | M42 | 24 | 45 | 9 | 18 | 12,6 | 9 | 9 | 18,9 | 13,5 | 9 | 1304 |
| C807X48 | C807XC48 | M48 | 32 | 64 | 12 | 24 | 16,8 | 12 | 12 | 25,2 | 18 | 12 | 1981 |

⚠ **THE DEVICE IS NOT SUITABLE FOR ROTATION DURING LOADING**

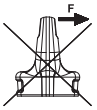


**CONFIGURATION NOT RECOMMENDED**

# CARTEC

## C807X H.T

**ROTATING EYEBOLT H.Q.** - can be oriented at 360°

**FORESEEN USE**
**Anchorage point for load lifting.**

- Safety coefficient 4 in all loading directions
- Designed, tested and certified in compliance with the technical directives GS-OA 15-04 – EN 1677
- Suitable for safe lifting in compliance with the machinery directive 2006/42/EC
- Can be oriented at 360°
- Tested at 100 % magnaflux
- Tested at 20.000 fatigue cycles
- Ideal for fastening at 90°
- Captive screws
- On the axial pull there can be variation of +/-5° with a 10% decrease in capacity



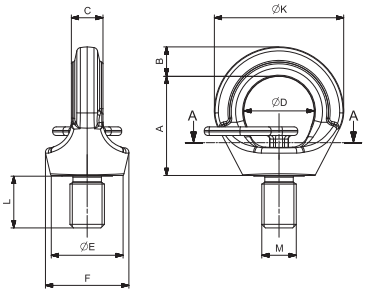




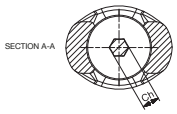


### KEY KIT 807 H.T.

| Code | Accessory of use |
|---|---|
| CK807XHT060810 | 807XHTM060810 |
| CK807XHT12 | 807XHTM12 |
| CK807XHT16 | 807XHTM16 |
| CK807XHT20 | 807XHTM20 |
| CK807XHT24 | 807XHTM24 |
| CK807XHT30 | 807XHTM30 |
| CK807XHT36 | 807XHTM36 |
| CK807XHT42 | 807XHTM42 |
| CK807XHT48 | 807XHTM48 |

| Code without key | Code with key | **Size** mm | **W.L.L.** t | **A** mm | **B** mm | **C** mm | **D** Ø mm | **E** Ø mm | **F** mm | **K** Ø mm | **L** mm | **CH** mm | **Weight** Kg |
|---|---|---|---|---|---|---|---|---|---|---|---|---|---|
| C807XHT06 | C807XCHT06 | M6 | 0,1 | 27 | 9,5 | 7 | 20 | 23 | 28 | 37 | 9 | 6 | 0,08 |
| C807XHT08 | C807XCHT08 | M8 | 0,3 | 35 | 11 | 9 | 25 | 25,5 | 30 | 46 | 12 | 6 | 0,12 |
| C807XHT10 | C807XCHT10 | M10 | 0,4 | 33,7 | 10 | 9,8 | 25 | 25,5 | 30 | 46 | 15 | 6 | 0,12 |
| C807XHT12 | C807XCHT12 | M12 | 0,75 | 41,5 | 12,5 | 11,5 | 30 | 30,6 | 36,5 | 55,5 | 18 | 8 | 0,2 |
| C807XHT14 | C807XCHT14 | M14 | 0,75 | 41,5 | 12,5 | 11,5 | 30 | 30,6 | 36,5 | 55,5 | 18 | 8 | 0,2 |
| C807XHT16 | C807XCHT16 | M16 | 1,5 | 49,5 | 14,5 | 15,7 | 35 | 36,5 | 42 | 64,5 | 24 | 10 | 0,35 |
| C807XHT18 | C807XCHT18 | M18 | 1,5 | 49,5 | 14,5 | 15,7 | 35 | 36,5 | 42 | 64,5 | 24 | 10 | 0,35 |
| C807XHT20 | C807XCHT20 | M20 | 2,3 | 58 | 16 | 18 | 40 | 42 | 52,5 | 74,5 | 30 | 12 | 0,6 |
| C807XHT22 | C807XCHT22 | M22 | 2,3 | 58 | 16 | 18 | 40 | 42 | 52,5 | 74,5 | 30 | 12 | 0,6 |
| C807XHT24 | C807XCHT24 | M24 | 3,2 | 69 | 20,5 | 22 | 49 | 50 | 61 | 90 | 36 | 12 | 1 |
| C807XHT27 | C807XCHT27 | M27 | 3,2 | 69 | 20,5 | 22 | 49 | 50 | 61 | 90 | 36 | 12 | 1 |
| C807XHT30 | C807XCHT30 | M30 | 4,5 | 86 | 25,5 | 28 | 60 | 66 | 75 | 111 | 45 | 17 | 2 |
| C807XHT33 | C807XCHT33 | M33 | 4,5 | 86 | 25,5 | 28 | 60 | 66 | 75 | 111 | 45 | 17 | 2 |
| C807XHT36 | C807XCHT36 | M36 | 7 | 105 | 32 | 30 | 74 | 77 | 96,5 | 135 | 55 | 22 | 3,4 |
| C807XHT42 | C807XCHT42 | M42 | 9 | 118 | 38 | 37 | 82 | 87 | 110 | 158 | 65 | 24 | 5,7 |
| C807XHT48 | C807XCHT48 | M48 | 12 | 137 | 43 | 38 | 95 | 102 | 124,5 | 180 | 72 | 27 | 8,5 |

**Working load limit W.L.L. (t)**

| Code without key | Code with key | **Size** mm | **0°** 1 leg | **0°** 2 legs | **90°** 1 leg | **90°** 2 legs | **0°- 45°** 2 legs | **45°- 60°** 2 legs | **Asymm** 2 legs | **0°- 45°** 3/4 legs | **45°- 60°** 3/4 legs | **Asymm** 3/4 legs | **Max tightening torque** Nm |
|---|---|---|---|---|---|---|---|---|---|---|---|---|---|
| C807XHT06 | C807XCHT06 | M6 | 0,5 | 1 | 0,1 | 0,2 | 0,14 | 0,1 | 0,1 | 0,21 | 0,15 | 0,1 | 6 |
| C807XHT08 | C807XCHT08 | M8 | 1 | 2 | 0,3 | 0,6 | 0,42 | 0,3 | 0,3 | 0,63 | 0,45 | 0,3 | 8 |
| C807XHT10 | C807XCHT10 | M10 | 1 | 2 | 0,4 | 0,8 | 0,56 | 0,4 | 0,4 | 0,84 | 0,6 | 0,4 | 16 |
| C807XHT12 | C807XCHT12 | M12 | 2 | 4 | 0,75 | 1,5 | 1 | 0,75 | 0,75 | 1,6 | 1,12 | 0,75 | 25 |
| C807XHT14 | C807XCHT14 | M14 | 2 | 4 | 0,75 | 1,5 | 1 | 0,75 | 0,75 | 1,6 | 1,12 | 0,75 | 30 |
| C807XHT16 | C807XCHT16 | M16 | 4 | 8 | 1,5 | 3 | 2 | 1,5 | 1,5 | 3,15 | 2,25 | 1,5 | 60 |
| C807XHT18 | C807XCHT18 | M18 | 4 | 8 | 1,5 | 3 | 2 | 1,5 | 1,5 | 3,15 | 2,25 | 1,5 | 70 |
| C807XHT20 | C807XCHT20 | M20 | 6 | 12 | 2,3 | 4,6 | 3,22 | 2,3 | 2,3 | 4,83 | 3,45 | 2,3 | 110 |
| C807XHT22 | C807XCHT22 | M22 | 6 | 12 | 2,3 | 4,6 | 3,22 | 2,3 | 2,3 | 4,83 | 3,45 | 2,3 | 120 |
| C807XHT24 | C807XCHT24 | M24 | 8 | 16 | 3,2 | 6,4 | 4,48 | 3,2 | 3,2 | 6,7 | 4,8 | 3,2 | 195 |
| C807XHT27 | C807XCHT27 | M27 | 8 | 16 | 3,2 | 6,4 | 4,48 | 3,2 | 3,2 | 6,7 | 4,8 | 3,2 | 240 |
| C807XHT30 | C807XCHT30 | M30 | 12 | 24 | 4,5 | 9 | 6,3 | 4,5 | 4,5 | 9,4 | 6,7 | 4,5 | 320 |
| C807XHT33 | C807XCHT33 | M33 | 12 | 24 | 4,5 | 9 | 6,3 | 4,5 | 4,5 | 9,4 | 6,7 | 4,5 | 350 |
| C807XHT36 | C807XCHT36 | M36 | 16 | 32 | 7 | 14 | 9,8 | 7 | 7 | 14,7 | 10,5 | 7 | 585 |
| C807XHT42 | C807XCHT42 | M42 | 24 | 45 | 9 | 18 | 12,6 | 9 | 9 | 18,9 | 13,5 | 9 | 920 |
| C807XHT48 | C807XCHT48 | M48 | 32 | 64 | 12 | 24 | 16,8 | 12 | 12 | 25,2 | 18 | 12 | 1590 |

⚠ **THE DEVICE IS NOT SUITABLE FOR ROTATION DURING LOADING**

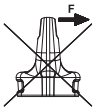


**CONFIGURATION NOT RECOMMENDED**

# CARTEC

## C810X

**ROTATING EYEBOLT H.Q.E.** - variable screw length

**FORESEEN USE**

**Anchorage point used to lift loads with through holes and/or threaded dead holes.**

- Safety coefficient 4 in all loading directions
- Designed, tested and certified in compliance with the technical directives GS-OA 15-04 – EN 1677
- Suitable for safe lifting in compliance with the machinery directive 2006/42/EC
- Can be oriented at 360°
- Tested at 100 % magnaflux
- Tested at 20.000 fatigue cycles
- Cylinder head screw with hexagonal slot cl. 10.9 with variable length in compliance with directive UNI5931-DIN912
- We recommend the use of a washer DIN 6340 with appropriate dimensions to apply against the nut.
- On the axial pull there can be variation of +/-5° with a 10% decrease in capacity
- If the eyebolt is installed against the nut it has to be high and the through hole has to be on the part to be lifted with a diameter maximum with respect to the nominal diameter of the screw used
- When using a counter-nut, check that, once installed, both the base of the device and the counter nut are totally in contact with the surface of the part to be lifted.



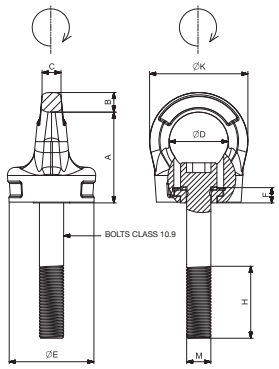


| Code | Size mm | W.L.L. t | A mm | B mm | C mm | D Ø mm | E Ø mm | K Ø mm | F mm |
|---|---|---|---|---|---|---|---|---|---|
| C810X08 | M8 | 0,3 | 44,5 | 8 | 10 | 29 | 32 | 45 | 10,5 |
| C810X10 | M10 | 0,4 | 44,5 | 8 | 10 | 29 | 32 | 45 | 6,5 |
| C810X12 | M12 | 0,75 | 53,5 | 11 | 11 | 34 | 44 | 56 | 8 |
| C810X16 | M16 | 1,5 | 59,5 | 13 | 14,5 | 39 | 56 | 65 | 8,5 |
| C810X20 | M20 | 2,3 | 67 | 14 | 17 | 42 | 58 | 70 | 10,5 |
| C810X24 | M24 | 3,2 | 80 | 18 | 19 | 52 | 73 | 88 | 13,5 |
| C810X30 | M30 | 4,5 | 101 | 22 | 27 | 62 | 80 | 106 | 17 |

**Working load limit W.L.L. (t)**

| Code | Size mm | 0° 1 leg | 0° 2 legs | 90° 1 leg | 90° 2 legs | 0°- 45° 2 legs | 45°- 60° 2 legs | Asymm 2 legs | 0°- 45° 3/4 legs | 45°- 60° 3/4 legs | Asymm 3/4 legs | Max tightening torque Nm |
|---|---|---|---|---|---|---|---|---|---|---|---|---|
| C810X08 | M8 | 1 | 2 | 0,3 | 0,6 | 0,42 | 0,3 | 0,3 | 0,63 | 0,45 | 0,3 | 8 |
| C810X10 | M10 | 1 | 2 | 0,4 | 0,8 | 0,56 | 0,4 | 0,4 | 0,84 | 0,6 | 0,4 | 16 |
| C810X12 | M12 | 2 | 4 | 0,75 | 1,5 | 1 | 0,75 | 0,75 | 1,6 | 1,12 | 0,75 | 28 |
| C810X16 | M16 | 4 | 8 | 1,5 | 3 | 2 | 1,5 | 1,5 | 3,15 | 2,25 | 1,5 | 70 |
| C810X20 | M20 | 6 | 12 | 2,3 | 4,6 | 3,22 | 2,3 | 2,3 | 4,83 | 3,45 | 2,3 | 135 |
| C810X24 | M24 | 8 | 16 | 3,2 | 6,4 | 4,48 | 3,2 | 3,2 | 6,7 | 4,8 | 3,2 | 230 |
| C810X30 | M30 | 12 | 24 | 4,5 | 9 | 6,3 | 4,5 | 4,5 | 9,4 | 6,7 | 4,5 | 465 |

⚠ **THE EYEBOLT CANNOT IN ANY WAY BE USED WITH SCREWS OF AN INAPPROPRIATE LENGTH THAT PREVENT THE CORRECT FIXING OF THE DEVICE – SEE DIAGRAM FOR NON CORRECT USE**

⚠ **DO NOT USE A COUNTER-NUT INFERIOR TO 10**

⚠ **THE DEVICE IS NOT SUITABLE FOR ROTATION DURING LOADING**

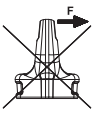


**CONFIGURATION NOT RECOMMENDED**

**YES**

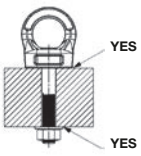


**NO**

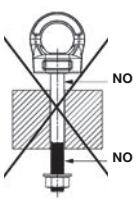




| Technische wijzigingen voorbehouden | Sous réserve de modifications techniques |
| Subject to technical modifications | Technische Änderungen vorbehalten |

# CARTEC

**KIT OF KEY 810** - spanner kit to be ordered separately

| Code | Accessory of use |
|---|---|
| CK810X08 | 810XM08 |
| CK810X10 | 810XM10 |
| CK810X12 | 810XM12 |
| CK810X16 | 810XM16 |
| CK810X20 | 810XM20 |
| CK810X24 | 810XM24 |
| CK810X30 | 810XM30 |



**WASHER KIT DIN6340 + HIGH NUT UNI 5587 CL.10 X 810** - to be ordered separately

| Code | Accessory of use |
|---|---|
| CK810XRD08 | 810XM08 |
| CK810XRD10 | 810XM10 |
| CK810XRD12 | 810XM12 |
| CK810XRD16 | 810XM16 |
| CK810XRD20 | 810XM20 |
| CK810XRD24 | 810XM24 |
| CK810XRD30 | 810XM30 |



**SCREW CYLINDRICAL HEAD CLASS 10.9 WITH HEXAGONAL HOLE FOR ART. 810**

| d standard thread | | M8 | M10 | M12 | M16 | M20 | M24 | M30 |
|---|---|---|---|---|---|---|---|---|
| | | mm | mm | mm | mm | mm | mm | mm |
| dk | Max. | 13 | 16 | 18 | 24 | 30 | 36 | 45 |
| | Max. | 13,27 | 16,27 | 18,27 | 24,33 | 30,33 | 36,39 | 45,39 |
| | Min. | 12,73 | 15,73 | 18,73 | 23,67 | 29,67 | 35,61 | 44,61 |
| K | Max. | 8 | 10 | 12 | 16 | 20 | 24 | 30 |
| | Min. | 7,64 | 9,64 | 11,57 | 15,57 | 19,48 | 23,48 | 29,48 |
| ds | Max. | 8 | 10 | 12 | 16 | 20 | 24 | 30 |
| | Min. | 7,78 | 9,78 | 11,73 | 15,73 | 19,67 | 23,67 | 29,67 |
| s nominal | | 6 | 8 | 10 | 11 | 17 | 19 | 22 |
| e | Min. | 6,68 | 9,15 | 11,43 | 16 | 19,44 | 21,73 | 25,15 |
| H | | 28 | 32 | 36 | 44 | 52 | 60 | 72 |

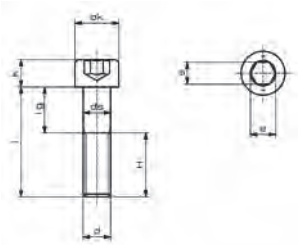

**quotas bolts class 10.9**

| | M8 | M10 | M12 | M16 | M20 | M24 | M30 |
|---|---|---|---|---|---|---|---|
| mm | mm | mm | mm | mm | mm | mm | mm |
| l Nom | lg Max | lg Max | lg Max | lg Max | lg Max | lg Max | lg Max |
| 35 | 3,75 | | | | | | |
| 40 | 12 | 4,5 | | | | | |
| 45 | 17 | 13 | 5,25 | | | | |
| 50 | 22 | 18 | 5,25 | 6 | | | |
| 55 | 27 | 23 | 19 | 6 | 7,5 | | |
| 60 | 32 | 28 | 24 | 6 | 7,5 | 9 | |
| 65 | 37 | 33 | 29 | 21 | 7,5 | 9 | |
| 70 | 42 | 38 | 34 | 26 | 7,5 | 9 | |
| 75 | 47 | 43 | 39 | 31 | 23 | 9 | |
| 80 | 52 | 48 | 44 | 36 | 28 | 9 | 10,5 |
| 85 | 57 | 53 | 49 | 41 | 33 | 9 | 10,5 |
| 90 | 62 | 58 | 54 | 46 | 38 | 30 | 10,5 |
| 100 | 72 | 68 | 64 | 56 | 48 | 40 | 10,5 |
| 110 | 82 | 78 | 74 | 66 | 58 | 50 | 38 |
| 120 | 92 | 88 | 84 | 76 | 68 | 60 | 48 |
| 130 | 102 | 98 | 94 | 86 | 78 | 70 | 58 |
| 140 | 112 | 108 | 104 | 96 | 88 | 80 | 68 |
| 150 | 122 | 118 | 114 | 106 | 98 | 90 | 78 |
| 160 | 132 | 128 | 124 | 116 | 108 | 100 | 88 |
| 180 | 152 | 148 | 144 | 136 | 128 | 120 | 108 |
| 200 | | | | 156 | 148 | 140 | 128 |
| 220 | | | | 176 | 168 | 160 | 148 |
| 240 | | | | 196 | 188 | 180 | 168 |

The dimensions situated in the grey block are to be considered totally threaded

To calculate the effective length of the device shank (value X), use the following formula: **X = l – F**
where "l" is the nominal length of the screw and "F" is the bush thickness.

# CARTEC

## C810 FX

**ROTATING EYENUT H.Q.E.** - fitted with integrated self locking system

**FORESEEN USE**

**Anchorage point for load lifting. Can be used with stud bolts and or threaded screws.**

- Safety coefficient 4 in all loading directions
- Designed, tested and certified in compliance with the technical directives GS-OA 15-04 – EN 1677
- Suitable for safe lifting in compliance with the machinery directive 2006/42/EC
- Can be oriented at 360°
- Tested at 100 % magnaflux
- Tested at 20.000 fatigue cycles
- Captive nut
- Can be screwed on with a spanner
- On the axial pull there can be variation of +/-5° with a 10% decrease in capacity
- The threaded pivot must always be screwed on completely along the length of the nut



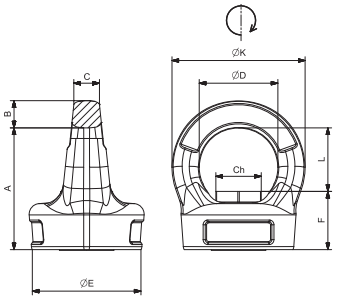




Integrated self locking system

| Code | **Size** mm | **W.L.L.** t | **A** mm | **B** mm | **C** mm | **D** Ø mm | **E** Ø mm | **K** Ø mm | **F** mm | **L** mm | **Ch** mm | **Weight** Kg |
|---|---|---|---|---|---|---|---|---|---|---|---|---|
| **C810FX08** | M8 | 0,3 | 44,5 | 8 | 10 | 29 | 32 | 45 | 21,5 | 23 | 13 | 0,17 |
| **C810FX10** | M10 | 0,4 | 44,5 | 8 | 10 | 29 | 32 | 45 | 21,5 | 23 | 14 | 0,2 |
| **C810FX12** | M12 | 0,75 | 53,5 | 11 | 11 | 34 | 44 | 56 | 26,5 | 27 | 16 | 0,39 |
| **C810FX16** | M16 | 1,5 | 59,5 | 13 | 14,5 | 39 | 56 | 65 | 30,5 | 29 | 21 | 0,69 |
| **C810FX20** | M20 | 2,3 | 67 | 14 | 17 | 42 | 58 | 70 | 33 | 34 | 26 | 0,71 |
| **C810FX24** | M24 | 3,2 | 80 | 18 | 19 | 52 | 73 | 88 | 40 | 40 | 30 | 1,7 |
| **C810FX30** | M30 | 4,5 | 101 | 22 | 27 | 62 | 80 | 106 | 51 | 50 | 36 | 2,44 |

**Working load limit W.L.L. (t)**

| Code | **Size** mm | **0°** 1 leg | **0°** 2 legs | **90°** 1 leg | **90°** 2 legs | **0°- 45°** 2 legs | **45°- 60°** 2 legs | **Asymm** 2 legs | **0°- 45°** 3/4 legs | **45°- 60°** 3/4 legs | **Asymm** 3/4 legs | **Max tightening torque** Nm |
|---|---|---|---|---|---|---|---|---|---|---|---|---|
| **C810FX08** | M8 | 1 | 2 | 0,3 | 0,6 | 0,42 | 0,3 | 0,3 | 0,63 | 0,45 | 0,3 | 8 |
| **C810FX10** | M10 | 1 | 2 | 0,4 | 0,8 | 0,56 | 0,4 | 0,4 | 0,84 | 0,6 | 0,4 | 16 |
| **C810FX12** | M12 | 2 | 4 | 0,75 | 1,5 | 1 | 0,75 | 0,75 | 1,6 | 1,12 | 0,75 | 28 |
| **C810FX16** | M16 | 4 | 8 | 1,5 | 3 | 2 | 1,5 | 1,5 | 3,15 | 2,25 | 1,5 | 70 |
| **C810FX20** | M20 | 6 | 12 | 2,3 | 4,6 | 3,22 | 2,3 | 2,3 | 4,83 | 3,45 | 2,3 | 135 |
| **C810FX24** | M24 | 8 | 16 | 3,2 | 6,4 | 4,48 | 3,2 | 3,2 | 6,7 | 4,8 | 3,2 | 230 |
| **C810FX30** | M30 | 12 | 24 | 4,5 | 9 | 6,3 | 4,5 | 4,5 | 9,4 | 6,7 | 4,5 | 465 |

⚠ **DO NOT USE THREADED PIVOTS INFERIOR TO 10.9**

⚠ **THE DEVICE IS NOT SUITABLE FOR ROTATION DURING LOADING**

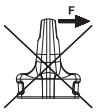


**CONFIGURATION NOT RECOMMENDED**

# CARTEC

## C815X

**ROTATING EYEBOLT WELD-ON TYPE WITH RING** - can be oriented during loading

**FORESEEN USE**
**Rotating eyebolt weld-on type for load lifting generally used to turn and overturn heavy loads.**

- Safety coefficient 4 in all loading directions
- Designed, tested and certified in compliance with the technical directives GS-OA 15-04 – EN 1677
- Suitable for safe lifting in compliance with the machinery directive 2006/42/EC
- Tested at 100 % magnaflux
- Tested at 20.000 fatigue cycles
- Can be oriented at 360° with self aligning tilting ring at 180°
- Assembled with spheres to make load orientation easier
- On the axial pull there can be variation of +/-5° with a 10% decrease in capacity



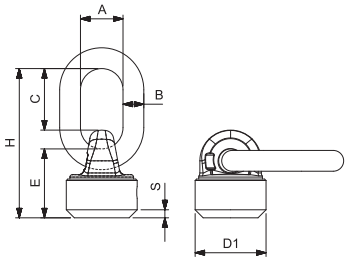


| Code | **W.L.L.**<br>t | **A**<br>mm | **B**<br>mm | **C**<br>mm | **E**<br>mm | **H**<br>mm | **D1**<br>mm | **S x 45°**<br>mm | **Weight**<br>Kg |
|---|---|---|---|---|---|---|---|---|---|
| **C815X025** | 2,5 | 34 | 16 | 58 | 61 | 131 | 52 | 5,5 | 1,05 |
| **C815X040** | 4 | 40 | 18 | 72 | 67 | 152 | 58 | 7 | 1,44 |
| **C815X067** | 6,7 | 45 | 22 | 65 | 73 | 158 | 75 | 8,5 | 2,7 |
| **C815X010** | 10 | 50 | 23 | 92 | 86 | 201 | 85 | 10 | 3,95 |
| **C815X017** | 17 | 70 | 32 | 120 | 105 | 255 | 110 | 12 | 8,5 |

**Working load limit W.L.L. (t)**

| Code | **W.L.L.**<br>t | **0°**<br>1 leg | **0°**<br>2 legs | **90°**<br>1 leg | **90°**<br>2 legs | **0°- 45°**<br>2 legs | **45°- 60°**<br>2 legs | **Asymm**<br>2 legs | **0°- 45°**<br>3/4 legs | **45°- 60°**<br>3/4 legs | **Asymm**<br>3/4 legs |
|---|---|---|---|---|---|---|---|---|---|---|---|
| **C815X025** | 2,5 | 5 | 10 | 2,5 | 5 | 3,55 | 2,5 | 2,5 | 5,3 | 3,75 | 2,5 |
| **C815X040** | 4 | 8 | 16 | 4 | 8 | 5,6 | 4,0 | 4,0 | 8,5 | 6,0 | 4,0 |
| **C815X067** | 6,7 | 12 | 24 | 6,7 | 13,4 | 9,5 | 6,7 | 6,7 | 14 | 10 | 6,7 |
| **C815X010** | 10 | 15 | 30 | 10 | 20 | 14 | 10 | 10 | 21,2 | 15 | 10 |
| **C815X017** | 17 | 25 | 50 | 17 | 34 | 23,5 | 17 | 17 | 35 | 25 | 17 |

⚠ **NOT SUITABLE FOR CONTINUOUS ROTATING MOVEMENT DURING LOADING**

# CARTEC

## C816X

**ROTATING EYENUT WITH RING** - can be oriented during loading



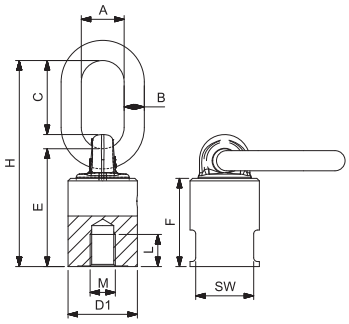


**FORESEEN USE**

**Rotating female eyenut for load lifting generally used to turn and overturn heavy loads. The eyenut can be used with stud bolts and / or threaded screws.**

- Coefficient 4 in all loading directions
- Designed, tested and certified in compliance with the technical directives GS-OA 15-04 – EN 1677
- Suitable for safe lifting in compliance with the machinery directive 2006/42/EC
- Tested at 100 % magnaflux
- Tested at 20.000 fatigue cycles
- Can be oriented at 360° with self aligning tilting ring at 180°
- Assembled with spheres to make load orientation easier
- On the axial pull there can be variation of +/-5° with a 10% decrease in capacity
- The threaded pivot must always be screwed on completely to stick the basis of the eyebolt with the basis of the object to be loaded.

| Code | **W.L.L.** t | **MxL** mm | **A** mm | **B** mm | **C** mm | **E** mm | **F** mm | **H** mm | **SW** mm | **D1** mm | **Weight** Kg |
|---|---|---|---|---|---|---|---|---|---|---|---|
| **C816X0051215** | 0,5 | M12x15 | 30 | 13 | 47 | 69 | 50 | 124 | 34 | 36,5 | 0,61 |
| **C816X0101620** | 1 | M16x20 | 30 | 13 | 47 | 76 | 57 | 131 | 34 | 38 | 0,68 |
| **C816X0172025** | 1,7 | M20x25 | 34 | 16 | 58 | 93 | 70 | 164 | 46 | 55 | 1,65 |
| **C816X0212430** | 2,1 | M24x30 | 42 | 18 | 72 | 107 | 81 | 193 | 50 | 58 | 2,17 |
| **C816X0323040** | 3,2 | M30x40 | 45 | 22 | 65 | 126 | 94 | 211 | 65 | 75 | 4,29 |
| **C816X0503645** | 5 | M36x45 | 50 | 23 | 92 | 145 | 109,5 | 260 | 75 | 84 | 6,22 |

**Working load limit W.L.L. (t)**

| Code | **Size** mm | **0°** 1 leg | **0°** 2 legs | **90°** 1 leg | **90°** 2 legs | **0°- 45°** 2 legs | **45°- 60°** 2 legs | **Asymm** 2 legs | **0°- 45°** 3/4 legs | **45°- 60°** 3/4 legs | **Asymm** 3/4 legs | **Max tightening torque** Nm |
|---|---|---|---|---|---|---|---|---|---|---|---|---|
| **C816X0051215** | 0,5 t-M12x15 | 1,4 | 2,8 | 0,5 | 1 | 0,7 | 0,5 | 0,5 | 1 | 0,75 | 0,5 | 15÷40 |
| **C816X0101620** | 1 t-M16x20 | 2,8 | 5,6 | 1 | 2 | 1,4 | 1 | 1 | 2,1 | 1,5 | 1 | 45÷130 |
| **C816X0172025** | 1,7 t-M20x25 | 5 | 10 | 1,7 | 3,4 | 2,4 | 1,7 | 1,7 | 3,6 | 2,5 | 1,7 | 100÷170 |
| **C816X0212430** | 2,1 t-M24x30 | 8 | 16 | 2,1 | 4,2 | 2,8 | 2,1 | 2,1 | 4,25 | 3,15 | 2,1 | 100÷170 |
| **C816X0323040** | 3,2 t-M30x40 | 12 | 24 | 3,2 | 6,4 | 4,25 | 3,2 | 3,2 | 6,7 | 4,75 | 3,2 | 230÷400 |
| **C816X0503645** | 5 t-M36x45 | 15 | 30 | 5 | 10 | 6,7 | 5 | 5 | 10 | 7,5 | 5 | 270÷600 |

⚠ **NOT SUITABLE FOR CONTINUOUS ROTATING MOVEMENT DURING LOADING**

# CARTEC

## C817X

**EYEBOLT TWISTER WITH BEARING** - rotation allowed during continuous loading

**FORESEEN USE**

**Fastening points for lifting loads suitable to continuous rotation during loading with axial pull**.

- Safety coefficient 4 in all loading directions
- Designed, tested and certified in compliance with the technical directives GS OA 1504 - EN 1677
- Suitable for safe lifting in compliance with the machinery directive 2006/42/EC
- Can be oriented at 360°
- Tested at 100 % magnaflux
- Tested at 20.000 fatigue cycles
- Ideal for rotation during loading
- Captive screws
- The device is suitable for rotation during loading only with axial pull; the eyebolt can be used in every other pull direction without rotation (for loads see reference table)

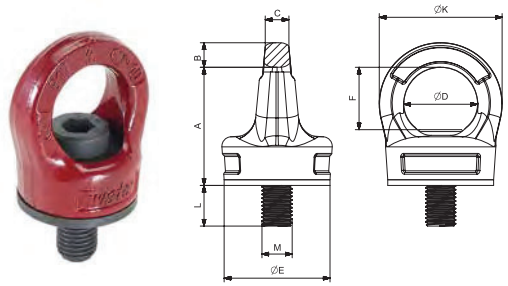




### KIT OF KEY 817

| Code | Accessory of use |
|---|---|
| CK817X12 | 817XM12 |
| CK817X16 | 817XM16 |
| CK817X20 | 817XM20 |
| CK817X24 | 817XM24 |
| CK817X30 | 817XM30 |

| Code without key | Code with key | Size mm | W.L.L. t | A mm | B mm | C mm | D Ø mm | E Ø mm | F mm | K Ø mm | L mm | Weight Kg |
|---|---|---|---|---|---|---|---|---|---|---|---|---|
| C817X12 | C817XC12 | M12 | 0,75 | 53,5 | 11 | 11 | 34 | 44 | 32 | 56 | 18 | 0,46 |
| C817X16 | C817XC16 | M16 | 1,5 | 56,5 | 13 | 14,5 | 39 | 56 | 33 | 65 | 24 | 0,9 |
| C817X20 | C817XC20 | M20 | 2,3 | 67 | 14 | 17 | 42 | 58 | 40 | 70 | 30 | 1,15 |
| C817X24 | C817XC24 | M24 | 3,2 | 80 | 18 | 19 | 52 | 73 | 44,5 | 88 | 38,5 | 2,05 |
| C817X30 | C817XC30 | M30 | 4,5 | 101 | 22 | 27 | 62 | 80 | 53 | 106 | 44 | 4 |

**Working load limit W.L.L. (t)**

| Code without key | Code with key | Size mm | 0° 1 leg | 0° 2 legs | 90° 1 leg | 90° 2 legs | 0°- 45° 2 legs | 45°- 60° 2 legs | Asymm 2 legs | 0°- 45° 3/4 legs | 45°- 60° 3/4 legs | Asymm 3/4 legs | Max tightening torque Nm |
|---|---|---|---|---|---|---|---|---|---|---|---|---|---|
| C817X12 | C817XC12 | M12 | 0,75* | 1,5 | 0,75 | 1,5 | 1 | 0,75 | 0,75 | 1,6 | 1,12 | 0,75 | 28 |
| C817X16 | C817XC16 | M16 | 1,5* | 3 | 1,5 | 3 | 2 | 1,5 | 1,5 | 3,15 | 2,25 | 1,5 | 70 |
| C817X20 | C817XC20 | M20 | 2,3* | 4,6 | 2,3 | 4,6 | 3,22 | 2,3 | 2,3 | 4,83 | 3,45 | 2,3 | 135 |
| C817X24 | C817XC24 | M24 | 3,2* | 6,4 | 3,2 | 6,4 | 4,48 | 3,2 | 3,2 | 6,7 | 4,8 | 3,2 | 230 |
| C817X30 | C817XC30 | M30 | 4,5* | 9 | 4,5 | 9 | 6,3 | 4,5 | 4,5 | 9,4 | 6,7 | 4,5 | 465 |

* Axial pull with rotation during continuous loading

⚠ **DO NOT EXCEED DURING ROTATION PHASE LOADS 50 RPM**

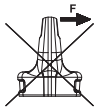


**CONFIGURATION NOT RECOMMENDED**

# CARTEC

## C820X

**LIFTING RING WELD-ON TYPE DOUBLE BASE** - positioning made easier for lifting

**FORESEEN USE**
**Ring to be welded for load lifting.**

- Safety coefficient 4
- The entire perimeter of the base must be welded except for the water discharge area
- For asymmetric loads remember that the capacity has to be reduced as shown in the reference table
- The bracket must always be aligned to the polling direction (tolerance allowed +/- 10°)
- The anchorage clamp can be used safely up to maximum of 20.000 lifts with a full load
- Ring tested 100 % magnaflux
- Made in high resistant steel
- Painted with epoxy paint
- Tested at 20.000 fatigue cycles
- In particular applications the capacity which has to be used must be determined by the pulling inclination angle following the this formula:

$$Lc = \frac{C}{b \cdot \cos \delta}$$

Lc = capacity needed per single bracket
C = load to lift
b = number of sling arms
δ = pulling inclination angle

For the correct installation of the device, place the welding bases by the reference notches marked on the bracket.

**Ring to be ordered separately without base**



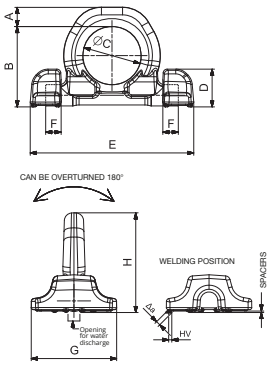


| Code | W.L.L. t | A mm | B mm | C mm | D mm | E mm | F mm | G mm | H mm | Welding thickness HV + Δa | Weight Kg |
|---|---|---|---|---|---|---|---|---|---|---|---|
| **C820X04** | 4 | 14 | 65 | 48 | 29 | 134 | 14 | 60 | 79 | HV 4+3 | 0,73 |
| **C820X067** | 6,7 | 20 | 83 | 60 | 39 | 169 | 16 | 88 | 103 | HV 5,5+3 | 1,8 |
| **C820X10** | 10 | 22 | 96 | 65 | 48 | 196 | 19,5 | 98 | 118 | HV 6+4 | 3 |
| **C820X16** | 16 | 31 | 126 | 90 | 55 | 264 | 29 | 127 | 155 | HV 8,5 +4 | 5,75 |
| **C820X30** | 30 | 42 | 175 | 130 | 79 | 371 | 45 | 157 | 217 | HV 15+4 | 16 |

**Working load limit W.L.L. (t)**

| Code | 0° 1 leg | 0° 2 legs | 90° 1 leg | 90° 2 legs | 0°- 45° 2 legs | 45°- 60° 2 legs | Asymm 2 legs | 0°- 45° 3/4 legs | 45°- 60° 3/4 legs | Asymm 3/4 legs |
|---|---|---|---|---|---|---|---|---|---|---|
| **C820X04** | 4 | 8 | 4 | 8 | 5,6 | 4 | 4 | 8,4 | 6 | 4 |
| **C820X067** | 6,7 | 13,4 | 6,7 | 13,4 | 9,38 | 6,7 | 6,7 | 14,1 | 10,1 | 6,7 |
| **C820X10** | 10 | 20 | 10 | 20 | 14 | 10 | 10 | 21 | 15 | 10 |
| **C820X16** | 16 | 32 | 16 | 32 | 22,4 | 16 | 16 | 33,6 | 24 | 16 |
| **C820X30** | 30 | 60 | 30 | 60 | 42 | 30 | 30 | 63 | 45 | 30 |

**NOT ALLOWED**

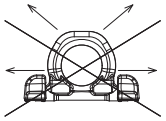

**DO NOT USE TO LIFT PEOPLE**

# CARTEC

## C821X

**LASHING RING WELD-ON TYPE DOUBLE BASE** - positioning made easier for lashing

**FORESEEN USE**
**Ring to be welded for load anchorage.**

- Safety coefficient 2
- The entire perimeter of the base must be welded except for the water discharge area
- Ring tested 100 % magnaflux
- Directive references to consider to choose and position bracket 821:
  EN 12640 – EN 75410 – EN 12195/1

For the correct installation of the device, place the welding bases by the reference notches marked on the bracket.



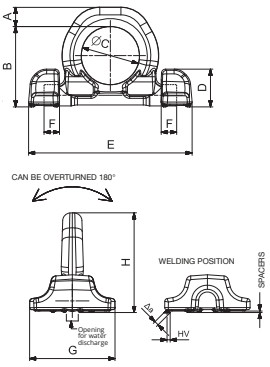


| Code | **Capacity LC** daN | **A** mm | **B** mm | **C** mm | **D** mm | **E** mm | **F** mm | **G** mm | **H** mm | **Welding thickness** HV + Δa | **Weight** Kg |
|---|---|---|---|---|---|---|---|---|---|---|---|
| **C821X08** | 8.000 | 14 | 65 | 48 | 29 | 134 | 114 | 60 | 79 | HV 4+3 | 0,73 |
| **C821X134** | 13.400 | 20 | 83 | 60 | 39 | 169 | 16 | 88 | 103 | HV 5,5+3 | 1,8 |
| **C821X20** | 20.000 | 22 | 96 | 65 | 48 | 196 | 19,5 | 98 | 118 | HV 6+4 | 3 |
| **C821X32** | 32.000 | 31 | 126 | 90 | 55 | 264 | 29 | 127 | 155 | HV 8,5+4 | 5,75 |

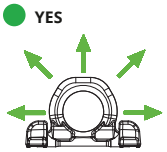


⚠ **DO NOT USE TO LIFT LOADS AND OR PEOPLE**

# CARTEC

## C830X

**LIFTING RING WELD-ON TYPE SINGLE BASE** - minimum overall dimensions for lifting



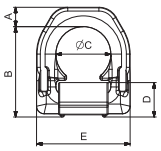


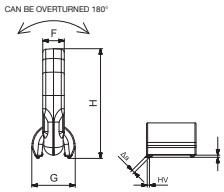


**FORESEEN USE**
**Ring to be welded for load lifting.**

- Safety coefficient 4
- For asymmetric loads remember that the capacity has to be reduced as shown in the reference table
- The bracket must always be aligned to the polling direction (tolerance allowed +/- 10°)
- The anchorage clamp can be used safely up to maximum of 20.000 lifts with a full load
- Ring tested 100 % magnaflux
- Made in high resistant steel
- Painted with epoxy paint
- Tested at 20.000 fatigue cycles
- In particular applications the capacity which has to be used must be determined by the pulling inclination angle following the this formula:

$$Lc = \frac{C}{b \cdot \cos \delta}$$

Lc = capacity needed per single bracket
C = load to lift
b = number of sling arms
δ = pulling inclination angle

| Code without spring | Code with spring | **W.L.L.** t | **A** mm | **B** mm | **C** mm | **D** mm | **E** mm | **F** mm | **G** mm | **H** mm | **Welding thickness** HV + Δa | **Weight** Kg |
|---|---|---|---|---|---|---|---|---|---|---|---|---|
| **C830X015** | **C830X015M** | 1,5 | 14 | 65 | 38 | 25 | 66 | 16 | 31 | 79 | HV 5+3 | 0,39 |
| **C830X025** | **C830X025M** | 2,5 | 16 | 75 | 45 | 27 | 77 | 18 | 34,5 | 91 | HV 7+3 | 0,59 |
| **C830X040** | **C830X040M** | 4 | 18 | 84 | 51 | 32 | 87 | 20 | 40 | 102 | HV 8+3 | 0,87 |
| **C830X067** | **C830X067M** | 6,7 | 24 | 117 | 67,3 | 44 | 115 | 26 | 58,5 | 141 | HV 12+4 | 2,23 |
| **C830X010** | **C830X010M** | 10 | 31 | 126 | 67 | 55 | 129 | 28,5 | 70,5 | 157 | HV 16+4 | 3,33 |
| **C830X016** | **C830X016M** | 16 | 45 | 174 | 100 | 69 | 190 | 42 | 87 | 219 | HV 25+6 | 9,28 |

**Working load limit W.L.L. (t)**

| Code without spring | Code with spring | **0°** 1 leg | **0°** 2 legs | **90°** 1 leg | **90°** 2 legs | **0°- 45°** 2 legs | **45°- 60°** 2 legs | **Asymm** 2 legs | **0°- 45°** 3/4 legs | **45°- 60°** 3/4 legs | **Asymm** 3/4 legs |
|---|---|---|---|---|---|---|---|---|---|---|---|
| **C830X015** | **C830X015M** | 1,5 | 3 | 1,5 | 3 | 2,1 | 1,5 | 1,5 | 3,15 | 2,25 | 1,5 |
| **C830X025** | **C830X025M** | 2,5 | 5 | 2,5 | 5 | 3,5 | 2,5 | 2,5 | 5,25 | 3,75 | 2,5 |
| **C830X040** | **C830X040M** | 4 | 8 | 4 | 8 | 5,6 | 4 | 4 | 8,4 | 6 | 4 |
| **C830X067** | **C830X067M** | 6,7 | 13,4 | 6,7 | 13,4 | 9,38 | 6,7 | 6,7 | 14,1 | 10,1 | 6,7 |
| **C830X010** | **C830X010M** | 10 | 20 | 10 | 20 | 14 | 10 | 10 | 21 | 15 | 10 |
| **C830X016** | **C830X016M** | 16 | 32 | 16 | 32 | 22,4 | 16 | 16 | 33,6 | 24 | 16 |

**NOT ALLOWED**

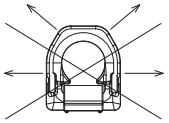

⚠ **DO NOT USE TO LIFT PEOPLE**

# CARTEC

## C832X

### WELD-ON HOOK

**FORESEEN USE**
**Weld on hook.**

- Safety factor 4
- For asymmetric loads remember that the capacity has to be reduced as shown in the reference table
- The hook must always be aligned to the pull direction
- The hook can be used safely up to maximum 20.000 liftings with a full load
- Made in high tensile steel
- Painted with epoxy paint
- 100% magnaflux tested
- Tested at 20.000 fatigue cycles
- Designed, tested and certified in compliance with the technical norms GS-OA 15-04 – EN 1677
- Suitable for safe lifting in compliance with the machinery directive 2006/42/EC



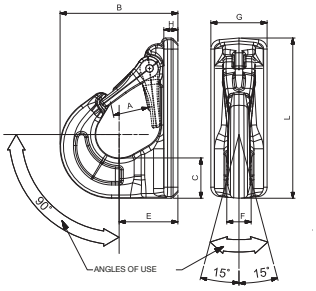


| Code | W.L.L. t | A mm | B mm | C mm | E mm | F mm | G mm | H mm | L mm | Weight Kg |
|---|---|---|---|---|---|---|---|---|---|---|
| C832X015 | 1,5 | 25 | 79 | 28 | 40 | 15 | 40 | 10 | 117 | 0,7 |
| C832X025 | 2,5 | 30 | 101 | 35 | 47 | 21 | 50 | 10 | 147 | 1,4 |
| C832X040 | 4 | 37 | 126 | 43 | 63 | 26 | 60 | 15 | 171 | 2,7 |
| C832X067 | 6,7 | 48 | 158 | 54 | 71 | 33 | 70 | 15 | 208 | 4,8 |

**Working load limit W.L.L. (t)**

| Code | W.L.L. t | 0° 1 leg | 0° 2 legs | 90° 1 leg | 90° 2 legs | 0°- 45° 2 legs | 45°- 60° 2 legs | Asymm 2 legs | 0°- 45° 3/4 legs | 45°- 60° 3/4 legs | Asymm 3/4 legs |
|---|---|---|---|---|---|---|---|---|---|---|---|
| C832X015 | 1,5 | 1,5 | 3 | 1,5 | 3 | 2,1 | 1,5 | 1,5 | 3,15 | 2,25 | 1,5 |
| C832X025 | 2,5 | 2,5 | 5 | 2,5 | 5 | 3,5 | 2,5 | 2,5 | 5,25 | 3,75 | 2,5 |
| C832X040 | 4 | 4 | 8 | 4 | 8 | 5,6 | 4 | 4 | 8,4 | 6,0 | 4 |
| C832X067 | 6,7 | 6,7 | 13,4 | 6,7 | 13,4 | 9,4 | 6,7 | 6,7 | 14 | 10 | 6,7 |

**NOT ALLOWED**

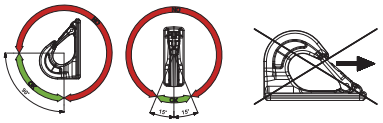

**NOT SUITABLE FOR CONTINUOUS ROTATING MOVEMENT DURING LOADING**

**DO NOT USE TO LIFT PEOPLE**

# CARTEC

NEW

## C838X

### RING WELD-ON TYPE



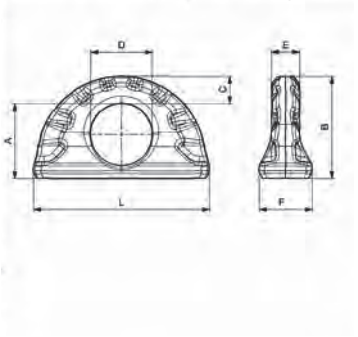


**FORESEEN USE**

**Weld-on lifting point for lifting loads or for welding on load-lifting equipment.**

- Safety coefficient 4
- The weld-on point can be used in complete safety up to maximum of 20,000 lifts at full load
- In the event of high-risk lifting operations, conditions of safety for those persons exposed to risks must be guaranteed
- Failure to abide by these instructions could cause property damage or personal injury
- Documentation drawn up in compliance with the provisions of point 1.7.4.2 of the 2006/42/EC
- Welding must be carried out by qualified personnel in compliance with the provisions of standard EN ISO 9606-1
- The weld-on point is made of 23MnNiCrMo5-2 tempered steel according to the DIN17115 standard

| Code | A mm | B mm | C mm | D mm | E mm | F mm | L mm | W.L.L. t | Weight Kg |
|---|---|---|---|---|---|---|---|---|---|
| C838X008 | 38 | 50 | 12 | 32 | 12 | 22 | 70 | 0,8 | 0,22 |
| C838X016 | 42,5 | 58 | 15,5 | 35 | 13 | 30 | 100 | 1,6 | 0,52 |
| C838X032 | 60,5 | 81,5 | 21 | 50 | 23 | 41 | 137 | 3,2 | 1,36 |
| C838X050 | 72,5 | 100,5 | 28 | 60 | 27 | 51 | 172 | 5 | 2,58 |
| C838X100 | 96,5 | 131,5 | 35 | 80 | 38 | 70 | 228 | 10 | 6,1 |

**Working load limit W.L.L. (t)** **W.L.L. POSITION OF USE 1/(W.L.L.) POSITION OF USE 2**

| Code | W.L.L. t | 0° 1 leg | 0° 2 legs | 90° 1 leg | 90° 2 legs | 0°- 45° 2 legs | 45°- 60° 2 legs | Asymm 2 legs | 0°- 45° 3/4 legs | 45°- 60° 3/4 legs | Asymm 3/4 legs |
|---|---|---|---|---|---|---|---|---|---|---|---|
| C838X008 | 0,8 | 2 | 4 | 0,8 (2) | 1,6 (4) | 1,12 (2,8) | 0,8 (2) | 0,8 (2) | 1,6 (4,25) | 1,18 (3) | 0,8 (2) |
| C838X016 | 1,6 | 4 | 8 | 1;6 (4) | 3,2 (8) | 2,2 (5,6) | 1;6 (4) | 1;6 (4) | 3,4 (8,4) | 2,4 (6) | 1;6 (4) |
| C838X032 | 3,2 | 9 | 18 | 3,2 (9) | 6,4 (18) | 4,5 (12,6) | 3,2 (9) | 3,2 (9) | 6,7 (18,9) | 4,8 (13,5) | 3,2 (9) |
| C838X050 | 5 | 12 | 24 | 5 (12) | 10 (24) | 7 (16,8) | 5 (12) | 5 (12) | 10,5 (25,2) | 7,5 (18) | 5 (12) |
| C838X100 | 10 | 20 | 40 | 10 (20) | 20 (40) | 14 (28) | 10 (20) | 10 (20) | 21,2 (42) | 15 (30) | 10 (20) |

**YES**

**POSITION OF USE 1**

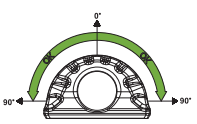


**POSITION OF USE 2**

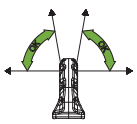

**DO NOT USE TO LIFT PEOPLE**

# CARTEC

## C825X

**ANCHORAGE CLAMP WITH SCREW-ON PLATE** - article on demand

**FORESEEN USE**
**Anchorage clamp with screw on plate.**

- Safety coefficient 4
- Screw included in the package
- Hex head screw burnished black cl 10.9 in compliance UNI5931/DIN912
- The anchorage bracket may be used in total safety with a maximum of 20.000 lifting full loads
- Suitable for lifting in safety conditions in compliance to the machine directive 2006/42/EC
- Painted with epoxy
- Tested to 20.000 fatigue cycles



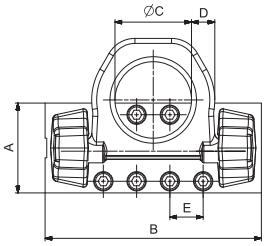


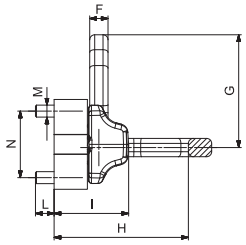


| Code | W.L.L. t | A mm | B mm | C mm | D mm | E mm | F mm | G mm | H mm | I mm | L mm | M mm | N mm | Weight Kg |
|---|---|---|---|---|---|---|---|---|---|---|---|---|---|---|
| **C825X30** | 30 | 180 | 400 | 130 | 42 | 75 | 41 | 194 | 255 | 159 | 80 | 30 | 120 | 61 |
| **C825X50** | 50 | 270 | 650 | 230 | 70 | 100 | 55 | 339 | 407 | 224 | 100 | 36 | 200 | 202 |

**Working load limit W.L.L. (t)**

| Code | 0° 1 leg | 0° 2 legs | 90° 1 leg | 90° 2 legs | 0°- 45° 2 legs | 45°- 60° 2 legs | Asymm 2 legs | 0°- 45° 3/4 legs | 45°- 60° 3/4 legs | Asymm 3/4 legs |
|---|---|---|---|---|---|---|---|---|---|---|
| **C825X30** | 30 | 60 | 30 | 60 | 42 | 30 | 30 | 63 | 45 | 30 |
| **C825X50** | 50 | 100 | 50 | 100 | 70 | 50 | 50 | 105 | 75 | 50 |

**DO NOT STAND DURING USE IN DANGEROUS AREAS**

**DO NOT USE TO LIFT PEOPLE**

# CARTEC

## C835X

**ANCHORAGE BRACKET WITH FIXING SCREWS** - anchorage guaranteed without welding

**FORESEEN USE**
**Anchorage bracket with fixing screws used for lifting loads.**

- Safety coefficient 4
- Ring for orientation at 120 °
- Screw included in the package
- From M20 to M30 screw burnished black cl 10.9 in compliance UNI5739 / DIN933
  From M36 to M48 screw burnished black cl 10.9 in compliance UNI5931 / DIN912
- The anchorage bracket may be used in total safety with a maximum of 20.000 lifting full loads
- Suitable for lifting in safety conditions in compliance to the machine directive 2006/42/EC
- Screw, bracket and ring tested at 100% magnaflux
- Realized with high resistance steel
- Painted with epoxy
- Tested to 20.000 fatigue cycles



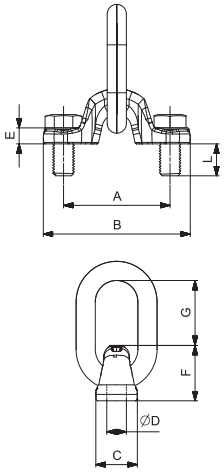


| Code | Size mm | W.L.L. t | A mm | B mm | C mm | ØD mm | E mm | F mm | G mm | L mm | Ring size mm | Key size mm | Weight Kg |
|---|---|---|---|---|---|---|---|---|---|---|---|---|---|
| **C835X04** | M20 | 4 | 100 | 138 | 39 | 21,5 | 15 | 52 | 61 | 35 | 18x85x40 | 30 | 1,2 |
| **C835X067** | M24 | 6,7 | 120 | 165,5 | 48 | 25,5 | 19 | 63 | 87 | 41 | 22x115x50 | 36 | 2,5 |
| **C835X10** | M30 | 10 | 160 | 216 | 62 | 31,5 | 25 | 78 | 106 | 45 | 26x140x65 | 46 | 7,1 |
| **C835X16** | M36 | 16 | 177 | 250 | 69 | 37 | 29 | 90 | 112 | 61 | 32x150x70 | 27* Hexagonal hole | 7,5 |
| **C835X20** | M42 | 20 | 200 | 290 | 90 | 43,5 | 43 | 116 | 140 | 67 | 40x190x100 | 32* Hexagonal hole | 9,3 |
| **C835X25** | M45 | 25 | 200 | 290 | 90 | 48 | 43 | 116 | 140 | 67 | 40x190x100 | 36* Hexagonal hole | 10,2 |
| **C835X30** | M48 | 30 | 200 | 290 | 90 | 51 | 43 | 116 | 140 | 77 | 40x190x100 | 36* Hexagonal hole | 10,2 |

**Working load limit W.L.L. (t)**

| Code | Size mm | 0° 1 leg | 0° 2 legs | 90° 1 leg | 90° 2 legs | 0°- 45° 2 legs | 45°- 60° 2 legs | Asymm 2 legs | 0°- 45° 3/4 legs | 45°- 60° 3/4 legs | Asymm 3/4 legs | Max tightening torque Nm |
|---|---|---|---|---|---|---|---|---|---|---|---|---|
| **C835X04** | M20 | 4 | 8 | 4 | 8 | 5,6 | 4 | 4 | 8,4 | 6 | 4 | 250 |
| **C835X067** | M24 | 6,7 | 13,4 | 6,7 | 13,4 | 9,5 | 6,7 | 6,7 | 14 | 10 | 6,7 | 400 |
| **C835X10** | M30 | 10 | 20 | 10 | 20 | 14 | 10 | 10 | 21 | 15 | 10 | 500 |
| **C835X16** | M36 | 16 | 32 | 16 | 32 | 22,4 | 16 | 16 | 33,6 | 24 | 16 | 800 |
| **C835X20** | M42 | 20 | 40 | 20 | 40 | 28 | 20 | 20 | 42 | 30 | 20 | 1304 |
| **C835X25** | M45 | 25 | 50 | 25 | 50 | 35 | 25 | 25 | 52,5 | 37,5 | 25 | 1630 |
| **C835X30** | M48 | 30 | 60 | 30 | 60 | 42 | 30 | 30 | 63 | 45 | 30 | 1981 |

**NOT ALLOWED**

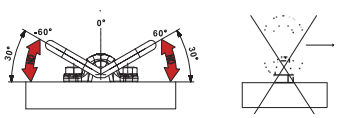


**YES**

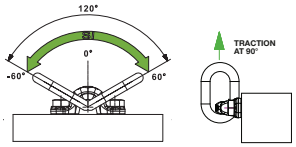


**DO NOT USE TO LIFT PEOPLE**

# CARTEC

## C836

**ANCHORAGE BRACKET WITH FIXING SCREWS** - anchorage guaranteed without welding

**FORESEEN USE**
**Anchorage bracket with fixing screws used for lifting loads.**

- Safety coefficient 4
- Ring for orientation at 120 °
- Screw included in the package
- Hex head screw burnished black cl 10.9 in compliance UNI5739 / DIN933
- The anchorage bracket may be used in total safety with a maximum of 20.000 lifting at full loads
- Suitable for lifting in safety conditions in compliance to the machine directive 2006/42/EC
- Screw, bracket and ring tested at 100% magnaflux
- Realized with high resistance steel
- Painted with epoxy
- Tested to 20.000 fatigue cycles



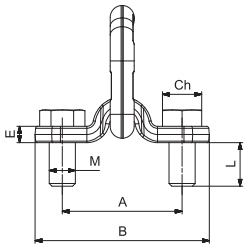


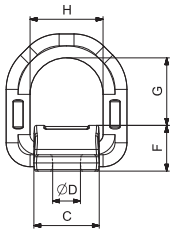


| Code | **Size** mm | **W.L.L.** t | **A** mm | **B** mm | **C** mm | **ØD** mm | **E** mm | **F** mm | **G** mm | **H** mm | **L** mm | **Ch** mm | **Weight** Kg |
|---|---|---|---|---|---|---|---|---|---|---|---|---|---|
| **C83603** | M20 | 3,15 | 90 | 130 | 50 | 21,5 | 12 | 34 | 53 | 56 | 33 | 30 | 1,5 |
| **C83605** | M24 | 5,3 | 110 | 160 | 60 | 25,5 | 15 | 42 | 63 | 67 | 40 | 36 | 2,6 |
| **C83608** | M27 | 8 | 130 | 190 | 70 | 28,5 | 20 | 55 | 68 | 80 | 45 | 41 | 4,6 |

**Working load limit W.L.L. (t)**

| Code | **Size** mm | **90°** 1 leg | **90°** 2 leg | **0°- 45°** 2 legs | **45°- 60°** 2 legs | **Asymm** 2 legs | **0°- 45°** 3/4 legs | **45°- 60°** 3/4 legs | **Asymm** 3/4 legs | **Max tightening torque** Nm |
|---|---|---|---|---|---|---|---|---|---|---|
| **C83603** | M20 | 4,75 | 9,3 | 4,25 | 3,15 | 3,15 | 6,3 | 4,75 | 4,75 | 210 |
| **C83605** | M24 | 8 | 16 | 7,1 | 5,3 | 5,3 | 11,2 | 8 | 8 | 290 |
| **C83608** | M27 | 12 | 24 | 11,2 | 8 | 8 | 16 | 12 | 12 | 550 |

**NOT ALLOWED**

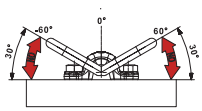


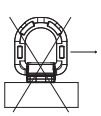

**YES**

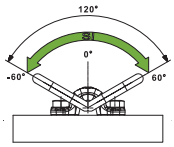


**DO NOT USE TO LIFT PEOPLE**

# CARTEC

## C900X H.T.

**ROTATING RESTRAINING DEVICE H.T. (PPE) EN 795** -
protection against falls from height (PPE) EN795

**FORESEEN USE**

**Device 900XHT is a safe arrest point to which anchoring one's body harness (harness compliant to EN361) through a suitable connection system (compliant to EN362) to prevent falls and their effects during work operations at height.**

- The threaded hole must be perpendicular to the supporting structure
- Tighten the device until it fits tightly against the surface

**Removable device – type A - Certified in accordance with EN-795 - 0426 notified body**

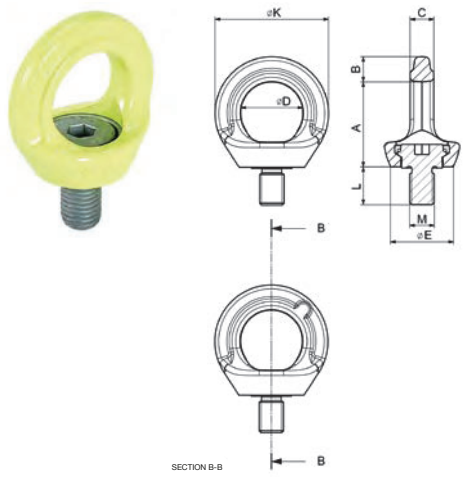


| Code | **Size** | **Capacity** Person | **A** mm | **B** mm | **C** mm | **D** mm | **E** mm | **K** mm | **L** mm | **Weight** Kg |
|---|---|---|---|---|---|---|---|---|---|---|
| **C900XHT12** | M12 | 1 | 41,5 | 12,5 | 11,5 | 30 | 30,6 | 55,5 | 18 | 0,18 |
| **C900XHT16** | M16 | 1-2 | 49,5 | 14,5 | 15 | 35 | 36,5 | 64,5 | 24 | 0,35 |
| **C900XHT20** | M20 | 1-2 | 58 | 16 | 18 | 40 | 42 | 74,5 | 30 | 0,6 |

**YES**




⚠ **WARNING: REPLACE THE DEVICE IMMEDIATELY IF IT HAS FALLEN OR IF YOU HAVE DOUBTS AS REGARDS ITS SUITABILITY FOR USE!**

# CARTEC

## C901X H.T.

**ROTATING RESTRAINING DEVICE WITH SCREW H.T. (PPE) EN 795** -
protection against falls from height (PPE) EN795

**FORESEEN USE**

**Device 901XHT is a safe arrest point to which anchoring one's body harness (harness compliant to EN361) through a suitable connection system (compliant to EN362) to prevent falls and their effects during work operations at height.**

- The threaded hole must be perpendicular to the supporting structure
- Tighten the device until it fits tightly against the surface

**Removable device – type A - Certified in accordance with EN-795 - 0426 notified body**

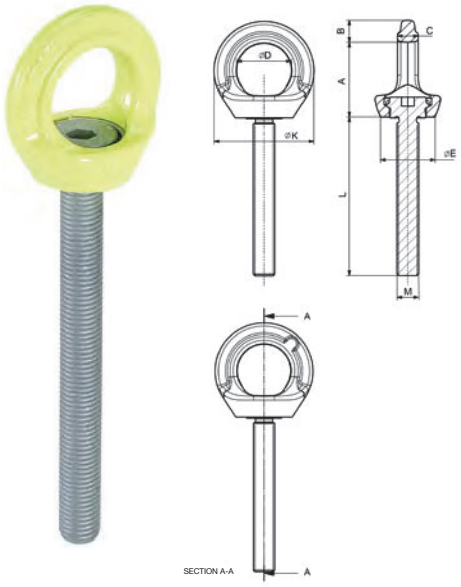


| Code | **Size** | **Capacity** Person | **A** mm | **B** mm | **E** mm | **D** mm | **E** mm | **K** mm | **L** mm | **Weight** Kg |
|---|---|---|---|---|---|---|---|---|---|---|
| **C901XHT12** | M12 | 1 | 41,5 | 12,5 | 11,5 | 30 | 30,6 | 55,5 | 150 | 0,3 |
| **C901XHT16** | M16 | 1-2 | 49,5 | 14,5 | 15 | 35 | 36,5 | 64,5 | 150 | 0,45 |

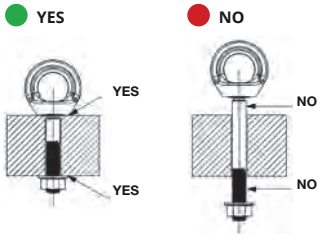


⚠ **WARNING: REPLACE THE DEVICE IMMEDIATELY IF IT HAS FALLEN OR IF YOU HAVE DOUBTS AS REGARDS ITS SUITABILITY FOR USE!**

# CARTEC

## C902X H.T.

**INOX** CE

**H.T. STAINLESS STEEL ROTATING RESTRAINING DEVICE ( PPE ) EN 795** -
protection against falls from height (PPE) EN795

**FORESEEN USE**

**Device 902XHT is a safe arrest point to which anchoring one's body harness (harness compliant to EN361) through a suitable connection system (compliant to EN362) to prevent falls and their effects during work operations at height.**

- The threaded hole must be perpendicular to the supporting structure
- Tighten the device until it fits tightly against the surface

**Removable device – type A - Certified in accordance with EN-795 - 0426 notified body**

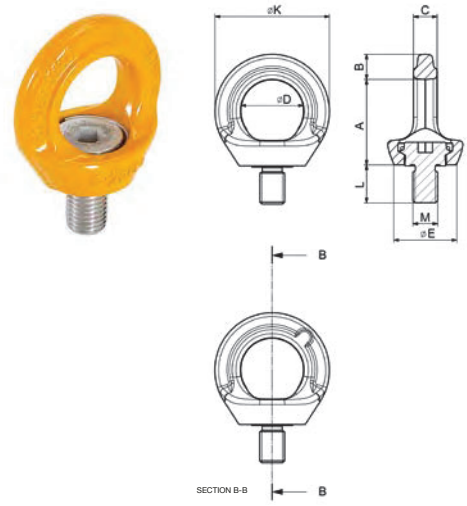


| Code | **Size** | **Capacity** Person | **A** mm | **B** mm | **C** mm | **D** mm | **E** mm | **K** mm | **L** mm | **Weight** Kg |
|---|---|---|---|---|---|---|---|---|---|---|
| **C902XHT12** | M12 | 1 | 41,5 | 12,5 | 11,5 | 30 | 30,6 | 55,5 | 18 | 0,18 |
| **C902XHT16** | M16 | 1-2 | 49,5 | 14,5 | 15 | 35 | 36,5 | 64,5 | 24 | 0,35 |
| **C902XHT20** | M20 | 1-2 | 58 | 16 | 18 | 40 | 42 | 74,5 | 30 | 0,6 |

**YES**




⚠ **WARNING: REPLACE THE DEVICE IMMEDIATELY IF IT HAS FALLEN OR IF YOU HAVE DOUBTS AS REGARDS ITS SUITABILITY FOR USE!**

# CARTEC

## C903X H.T.

**INOX** CE

**STAINLESS STEEL ROTATING RESTRAINING DEVICE WITH SCREW H.T. (PPE) EN 795** -
protection against falls from height (PPE) EN795

**FORESEEN USE**

**Device 903XHT is a safe arrest point to which anchoring one's body harness (harness compliant to EN361) through a suitable connection system (compliant to EN362) to prevent falls and their effects during work operations at height.**

- The threaded hole must be perpendicular to the supporting structure
- Tighten the device until it fits tightly against the surface

**Removable device – type A - Certified in accordance with EN-795 - 0426 notified body**

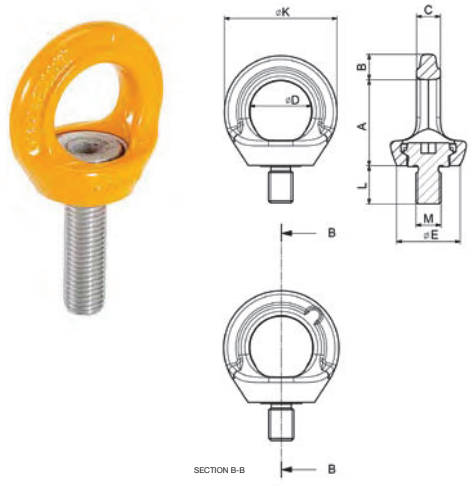


| Code | **Size** | **Capacity** Person | **A** mm | **B** mm | **E** mm | **D** mm | **E** mm | **K** mm | **L** mm | **Weight** Kg |
|---|---|---|---|---|---|---|---|---|---|---|
| **C903XHT12** | M12 | 1 | 41,5 | 12,5 | 11,5 | 30 | 30,6 | 55,5 | 50 | 0,22 |
| **C903XHT16** | M16 | 1-2 | 49,5 | 14,5 | 15 | 35 | 36,5 | 64,5 | 50 | 0,3 |
| **C903XHT16** | M16 | 1-2 | 49,5 | 14,5 | 15 | 35 | 36,5 | 64,5 | 120 | 0,45 |
| **C903XHT20** | M20 | 1-2 | 58 | 16 | 18 | 40 | 42 | 74,5 | 60 | 0,5 |

**YES**




⚠ **WARNING: REPLACE THE DEVICE IMMEDIATELY IF IT HAS FALLEN OR IF YOU HAVE DOUBTS AS REGARDS ITS SUITABILITY FOR USE!**

# CARTEC

## C801

**ADJUSTABLE EYEBOLT WITH SCREW 8.8** - safety coefficient 4

To be screwed with appropiate spanner

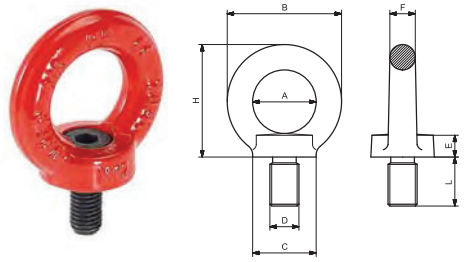


| Code | **Size** D x L (mm) | **A** mm | **B** mm | **C** mm | **F** mm | **H** mm | **Weight** Kg | **W.L.L.** t |
|---|---|---|---|---|---|---|---|---|
| **C80106** | M6x15 | 25 | 45 | 25 | 10 | 45 | 0,09 | 0,1 |
| **C80108** | M8x15 | 25 | 45 | 25 | 10 | 45 | 0,11 | 0,2 |
| **C80110** | M10x16 | 25 | 45 | 25 | 10 | 45 | 0,13 | 0,25 |
| **C80112** | M12x22 | 35 | 63 | 35 | 14 | 62 | 0,27 | 0,4 |
| **C80114** | M14x20 | 35 | 63 | 35 | 14 | 62 | 0,29 | 0,75 |
| **C80116** | M16x29 | 35 | 63 | 35 | 14 | 62 | 0,31 | 1 |
| **C80120** | M20x32 | 50 | 90 | 50 | 20 | 90 | 0,86 | 1,5 |
| **C80124** | M24x40 | 50 | 90 | 50 | 20 | 90 | 0,9 | 2 |
| **C80130** | M30x45 | 60 | 108 | 65 | 24 | 109 | 1,7 | 3 |

**Working load limit W.L.L. (t)**

| Code | **Size** mm | **0°** 1 leg | **0°** 2 legs | **90°** 1 leg | **90°** 2 legs | **0°- 45°** 2 legs | **45°- 60°** 2 legs | **0°- 45°** 3/4 legs | **45°- 60°** 3/4 legs | **Max tightening torque** Nm |
|---|---|---|---|---|---|---|---|---|---|---|
| **C80106** | M6x15 | 0,4 | 0,8 | 0,1 | 0,2 | 0,14 | 0,1 | 0,2 | 0,14 | 3,5 |
| **C80108** | M8x15 | 0,8 | 1,6 | 0,2 | 0,4 | 0,28 | 0,2 | 0,4 | 0,28 | 8 |
| **C80110** | M10x16 | 1 | 2 | 0,25 | 0,5 | 0,35 | 0,25 | 0,5 | 0,35 | 16 |
| **C80112** | M12x22 | 1,6 | 3,2 | 0,4 | 0,8 | 0,56 | 0,4 | 0,8 | 0,56 | 28 |
| **C80114** | M14x20 | 3 | 6 | 0,75 | 1,5 | 1 | 0,75 | 1,5 | 1 | 45 |
| **C80116** | M16x29 | 4 | 8 | 1 | 2 | 1,4 | 1 | 2 | 1,4 | 70 |
| **C80120** | M20x32 | 6 | 12 | 1,5 | 3 | 2,1 | 1,5 | 3 | 2,1 | 135 |
| **C80124** | M24x40 | 8 | 16 | 2 | 4 | 2,8 | 2 | 4 | 2,8 | 230 |
| **C80130** | M30x45 | 12 | 24 | 3 | 6 | 4,2 | 3 | 6 | 4,2 | 465 |

**YES** **NO**

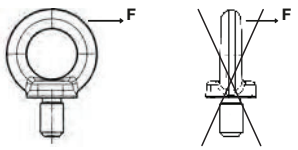

# CARTEC

## C802

**EYE NUT 8.8** - safety coefficient 4

To be screwed by hand



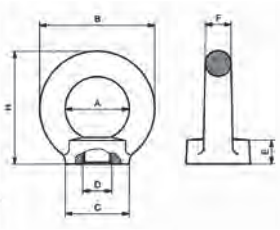


| Code | Size | A mm | B mm | C mm | E mm | F mm | H mm | Weight Kg | W.L.L. t |
|---|---|---|---|---|---|---|---|---|---|
| C80206 | M6 | 25 | 45 | 25 | 10 | 10 | 45 | 0,1 | 0,4 |
| C80208 | M8 | 25 | 45 | 25 | 10 | 10 | 45 | 0,1 | 0,8 |
| C80210 | M10 | 25 | 45 | 25 | 10 | 10 | 45 | 0,1 | 1 |
| C80212 | M12 | 35 | 63 | 35 | 14 | 14 | 62 | 0,26 | 1,6 |
| C80214 | M14 | 35 | 63 | 35 | 14 | 14 | 62 | 0,26 | 3 |
| C80216 | M16 | 35 | 63 | 35 | 14 | 14 | 62 | 0,26 | 4 |
| C80218 | M18 | 50 | 90 | 50 | 20 | 20 | 90 | 0,75 | 5 |
| C80220 | M20 | 50 | 90 | 50 | 20 | 20 | 90 | 0,75 | 6 |
| C80224 | M24 | 50 | 90 | 50 | 20 | 20 | 90 | 0,75 | 8 |
| C80227 | M27 | 60 | 108 | 65 | 24 | 24 | 109 | 1,4 | 10 |
| C80230 | M30 | 60 | 108 | 65 | 24 | 24 | 109 | 1,4 | 12 |

**Working load limit W.L.L. (t)**

| Code | Size mm | 0° 1 leg | 0° 2 legs | 0°- 45° 2 legs | 45°- 60° 2 legs | 0°- 45° 3/4 legs | 45°- 60° 3/4 legs | Max tightening torque Nm |
|---|---|---|---|---|---|---|---|---|
| C80206 | M6 | 0,4 | 0,8 | 0,14 | 0,1 | 0,2 | 0,14 | 3,5 |
| C80208 | M8 | 0,8 | 1,6 | 0,28 | 0,2 | 0,4 | 0,28 | 8 |
| C80210 | M10 | 1 | 2 | 0,35 | 0,25 | 0,5 | 0,35 | 16 |
| C80212 | M12 | 1,6 | 3,2 | 0,56 | 0,4 | 0,8 | 0,56 | 28 |
| C80214 | M14 | 3 | 6 | 1 | 0,75 | 1,5 | 1 | 45 |
| C80216 | M16 | 4 | 8 | 1,4 | 1 | 2 | 1,4 | 70 |
| C80218 | M18 | 5 | 10 | 1,8 | 1,25 | 2,5 | 1,8 | 95 |
| C80220 | M20 | 6 | 12 | 2,1 | 1,5 | 3 | 2,1 | 135 |
| C80224 | M24 | 8 | 16 | 2,8 | 2 | 4 | 2,8 | 230 |
| C80227 | M27 | 10 | 20 | 3,5 | 2,5 | 5 | 3,5 | 343 |
| C80230 | M30 | 12 | 24 | 4,2 | 3 | 6 | 4,2 | 465 |

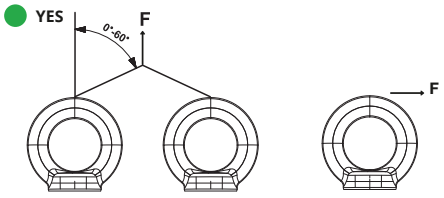


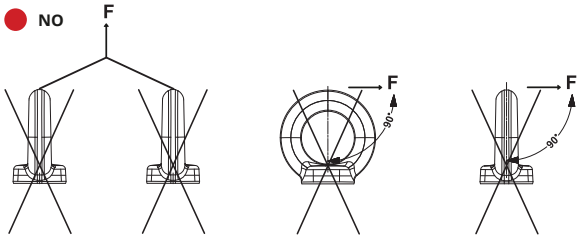

# CARTEC

## C803

**EYE BOLT 8.8** - safety coefficient 4

To be screwed by hand

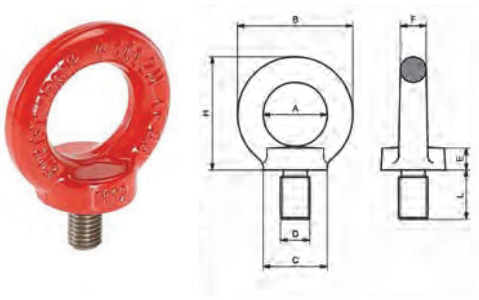

| Code | **Size** D x L (mm) | **A** mm | **B** mm | **C** mm | **E** mm | **F** mm | **H** mm | **Weight** Kg | **W.L.L.** t |
|---|---|---|---|---|---|---|---|---|---|
| **C80306** | M6x13 | 25 | 45 | 25 | 10 | 10 | 45 | 0,09 | 0,4 |
| **C80308** | M8x13 | 25 | 45 | 25 | 10 | 10 | 45 | 0,09 | 0,8 |
| **C80310** | M10x17 | 25 | 45 | 25 | 10 | 10 | 45 | 0,11 | 1 |
| **C80312** | M12x21 | 35 | 63 | 35 | 14 | 14 | 62 | 0,27 | 1,6 |
| **C80314** | M14x21 | 35 | 63 | 35 | 14 | 14 | 62 | 0,29 | 3 |
| **C80316** | M16x27 | 35 | 63 | 35 | 14 | 14 | 62 | 0,31 | 4 |
| **C80318** | M18x27 | 50 | 90 | 50 | 20 | 20 | 90 | 0,84 | 5 |
| **C80320** | M20x30 | 50 | 90 | 50 | 20 | 20 | 90 | 0,86 | 6 |
| **C80322** | M22x36 | 50 | 90 | 50 | 20 | 20 | 90 | 0,9 | 7 |
| **C80324** | M24x36 | 50 | 90 | 50 | 20 | 20 | 90 | 0,9 | 8 |
| **C80327** | M27x45 | 60 | 108 | 65 | 24 | 24 | 109 | 1,66 | 10 |
| **C80330** | M30x45 | 60 | 108 | 65 | 24 | 24 | 109 | 1,7 | 12 |
| **C80333** | M33x54 | 70 | 126 | 75 | 26 | 28 | 128 | 2 | 14 |
| **C80336** | M36x54 | 70 | 126 | 75 | 26 | 28 | 128 | 2,15 | 16 |
| **C80342** | M42x63 | 80 | 144 | 85 | 30 | 32 | 147 | 4,15 | 24 |
| **C80348** | M48x68 | 90 | 166 | 100 | 35 | 38 | 168 | 6,2 | 32 |
| **C80356** | M56x78 | 100 | 184 | 110 | 38 | 42 | 187 | 8,8 | 36 |
| **C80364** | M64x90 | 110 | 206 | 120 | 42 | 48 | 208 | 12,4 | 45 |

**Working load limit W.L.L. (t)**

| Code | **Size** mm | **0°** 1 leg | **0°** 2 legs | **0°- 45°** 2 legs | **45°- 60°** 2 legs | **0°- 45°** 3/4 legs | **45°- 60°** 3/4 legs | **Max tightening torque** Nm |
|---|---|---|---|---|---|---|---|---|
| **C80306** | M6x13 | 0,4 | 0,8 | 0,14 | 0,1 | 0,2 | 0,14 | 3,5 |
| **C80308** | M8x13 | 0,8 | 1,6 | 0,28 | 0,2 | 0,4 | 0,28 | 8 |
| **C80310** | M10x17 | 1 | 2 | 0,35 | 0,25 | 0,5 | 0,35 | 16 |
| **C80312** | M12x21 | 1,6 | 3,2 | 0,56 | 0,4 | 0,8 | 0,56 | 28 |
| **C80314** | M14x21 | 3 | 6 | 1 | 0,75 | 1,5 | 1 | 45 |
| **C80316** | M16x27 | 4 | 8 | 1,4 | 1 | 2 | 1,4 | 70 |
| **C80318** | M18x27 | 5 | 10 | 1,8 | 1,25 | 2,5 | 1,8 | 95 |
| **C80320** | M20x30 | 6 | 12 | 2,1 | 1,5 | 3 | 2,1 | 135 |
| **C80322** | M22x36 | 7 | 14 | 2,4 | 1,75 | 3,5 | 2,4 | 182 |
| **C80324** | M24x36 | 8 | 16 | 2,8 | 2 | 4 | 2,8 | 230 |
| **C80327** | M27x45 | 10 | 20 | 3,5 | 2,5 | 5 | 3,5 | 343 |
| **C80330** | M30x45 | 12 | 24 | 4,2 | 3 | 6 | 4,2 | 465 |
| **C80333** | M33x54 | 14 | 28 | 4,8 | 3,4 | 6,8 | 4,8 | 632 |
| **C80336** | M36x54 | 16 | 32 | 5,6 | 3,9 | 7,8 | 5,4 | 814 |
| **C80342** | M42x63 | 24 | 48 | 8,4 | 5,9 | 11,8 | 8,2 | 1304 |
| **C80348** | M48x68 | 32 | 64 | 11,2 | 7,8 | 15,6 | 10,9 | 1981 |
| **C80356** | M56x78 | 36 | 72 | 12,6 | 8,8 | 17,6 | 12,3 | 3000 |
| **C80364** | M64x90 | 45 | 90 | 15,7 | 11 | 22 | 15,4 | 4736 |

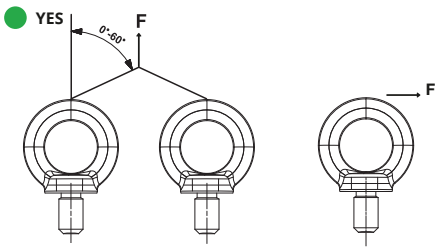


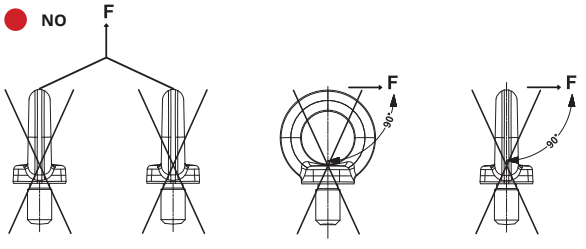

# CARTEC

## C804

**ATTACHMENT-POINT WELD-ON TYPE** - safety coefficient 4



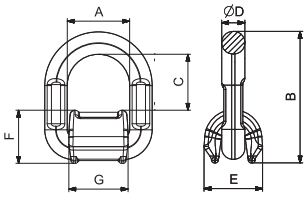


| Code | Code with spring | **A** mm | **B** mm | **C** mm | **D** mm | **E** mm | **F** mm | **G** mm | **Weight** Kg | **W.L.L.** t |
|---|---|---|---|---|---|---|---|---|---|---|
| **C80401** | **C80401M** | 41 | 80 | 35 | 13 | 38 | 33,5 | 37 | 0,47 | 1,12 |
| **C80402** | **C80402M** | 42 | 90 | 41 | 14 | 40 | 36 | 38 | 0,51 | 2 |
| **C80403** | **C80403M** | 46 | 96 | 42 | 17 | 43 | 37 | 44 | 0,69 | 3,15 |
| **C80405** | **C80405M** | 55 | 121 | 48 | 22 | 61 | 50 | 50 | 1,46 | 5,3 |
| **C80408** | **C80408M** | 70 | 144 | 62 | 26,5 | 70,5 | 54 | 66 | 2,52 | 8 |
| **C80415** | **C80415M** | 97 | 187 | 86 | 34 | 90 | 72 | 90 | 5,79 | 15 |

**Working load limit W.L.L. (t)**

| Code | Code with spring | **0°** 1 leg | **0°** 2 legs | **0°- 45°** 2 legs | **45°- 60°** 2 legs | **Asymm** 2 legs | **0°- 45°** 3/4 legs | **45°- 60°** 3/4 legs | **Asymm** 3/4 legs |
|---|---|---|---|---|---|---|---|---|---|
| **C80401** | **80401M** | 1,12 | 2,24 | 1,57 | 1,12 | 1,12 | 2,35 | 1,68 | 1,12 |
| **C80402** | **80402M** | 2 | 4 | 2,8 | 2 | 2 | 4,2 | 3 | 2 |
| **C80403** | **80403M** | 3,15 | 6,3 | 4,41 | 3,15 | 3,15 | 6,62 | 4,73 | 3,15 |
| **C80405** | **80405M** | 5,3 | 10,6 | 7,42 | 5,3 | 5,3 | 11,13 | 7,95 | 5,3 |
| **C80408** | **80408M** | 8 | 16 | 11,2 | 8 | 8 | 16,8 | 12 | 8 |
| **C80415** | **80415M** | 15 | 30 | 21 | 15 | 15 | 31,5 | 22,5 | 15 |

# CARTEC

## C805

**WELD-ON HOOK** - safety coefficient 4



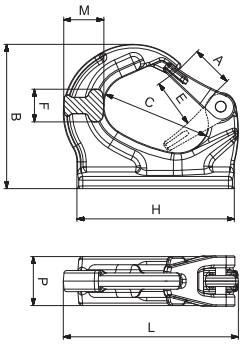


| Code | A mm | B mm | C mm | E mm | F mm | H mm | M mm | P mm | L mm | Weight Kg | W.L.L. t |
|---|---|---|---|---|---|---|---|---|---|---|---|
| C805112S | 23 | 77 | 63 | 22 | 18 | 93 | 22,5 | 25 | 101 | 0,54 | 1,12 |
| C8052 | 27 | 92 | 66 | 26 | 20,5 | 81 | 23 | 34 | 114 | 0,87 | 2 |
| C8053 | 30 | 106 | 75 | 30 | 24 | 116 | 30 | 36 | 128 | 1,27 | 3 |
| C8055 | 37 | 133 | 98 | 32,5 | 28 | 160 | 43 | 43,5 | 170 | 2,7 | 5 |
| C8058 | 36 | 137 | 99 | 31 | 39 | 166 | 44 | 51 | 177 | 3,5 | 8 |
| C80510 | 49 | 169 | 140 | 39 | 38 | 205 | 55 | 53 | 224 | 5,2 | 10 |

**Working load limit W.L.L. (t)**

| Code | 90° 1 leg | 90° 2 legs | 0°- 45° 2 legs | 45°- 60° 2 legs | Asymm 2 legs | 0°- 45° 3/4 legs | 45°- 60° 3/4 legs | Asymm 3/4 legs |
|---|---|---|---|---|---|---|---|---|
| C805112S | 1,12 | 2,24 | 1,57 | 1,12 | 1,12 | 2,35 | 1,68 | 1,12 |
| C8052 | 2 | 4 | 2,8 | 2 | 2 | 4,2 | 3 | 2 |
| C8053 | 3 | 6 | 4,2 | 3 | 3 | 6,3 | 4,5 | 3 |
| C8055 | 5 | 10 | 7 | 5 | 5 | 10,5 | 7,5 | 5 |
| C8058 | 8 | 16 | 11,2 | 8 | 8 | 16,8 | 12 | 8 |
| C80510 | 10 | 20 | 14 | 10 | 10 | 21 | 15 | 10 |

## CK805

**LATCH KIT FOR HOOKS**



| Code | Size (T) | Accessory of use |
|---|---|---|
| CK805112S | 1,12 | C805112 |
| CK8052 | 2 | C8052 |
| CK8053 | 3 | C8053 |
| CK8055 | 5 | C8055 |
| CK8058 | 8 | C8058 |
| CK80510 | 10 | C80510 |

# CARTEC

**Anchorages Devices**

The new machinery directive 2006/42/CE and the new legislation provisions concerning safety and health in business premises, for Italy the unique text D. Lgs 81/08, point out again the importance of reducing risks to a minimum in relation to lifting loads.
As a solution to the above Carcano SPA offers a series of fastening devices dedicated to carrying out all movement and or lifting operations for safe loading, these devices are designed, produced and tested at our plants giving complete guarantee of a “MADE IN ITALY” product.
Thanks to the design activities where the Carcano SPA technicians carefully analyse all the essential safety requirements prescribed by the European directives in question, thanks to the quality of raw materials and constant control of the device process guarantees:

- high performance even with out of alignment pulling,
- easy to orient and self aligning when loading,
- minimum overall dimensions during use,
- safety coefficient 4 in all pulling directions

**Anti Falling Stop Devices**

During the daily activity of workers in all kinds of factories and in building permanent or temporary sites it is quite normal to have to work at heights where it is difficult to apply common protection devices such as parapets or even life lines.
Carcano SPA offers new protection devices needed to guarantee worker anti fall stop.
The devices realized in conformity with all the specific directives for individual protection (2016/425, 795 362 364 365) undergo severe controls with sampling up to 100% in order to guarantee suitability of each single part.
To guarantee the above the devices are subject to the approval of accredited National and International institutions.

**Eyebolts DIN 580/582**

Together with anchorage device kits Carcano SPA also supplies the classic lifting eyebolt DIN 580/582 in the standard version in carbon steel and in the stainless steel version to be used in permanent outdoor environments and\or marine ones and in addition to these there is also the version in alloy steel class 8.8.
Eyebolts DIN580/582 due to the way they are made have some limits, that is difficult to orient in the direction of the load the dramatic reduction to the capacity out of alignment without a careful evaluation by the user may expose workers to very high risks and are difficult to prevent.
With this in mind we recommend the use of these eyebolts only in operations where the type of load and movements of the work area generate low exposure to the risk of crushing, impacts and accidents to people in general.

| Schroefbaar hijsoog | Anneau de levage émerillon à étrier | Rotating Eyebolt | Lastbock |
|---|---|---|---|
| 360° Rotatie – 180°Pivot | 360° Rotation – 180°Pivot | 360° Rotation – 180°Pivot | 360° Rotation – 180°Pivot |
| Type Y8-211 | Type Y8-211 | Type Y8-211 | Type Y8-211 |

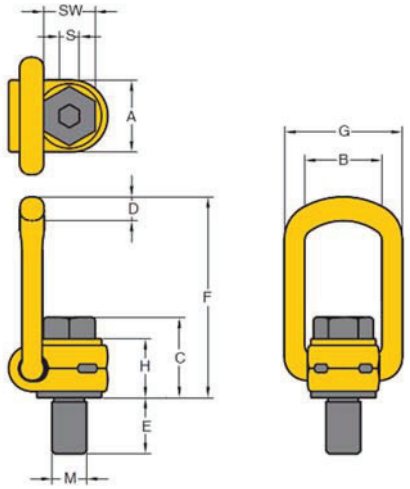





| Nominale maat Désignation Nominal size Nenngrösse | WLL [t] | A mm | B mm | C mm | D mm | E mm | F mm | G mm | H mm | S mm | SW mm | Torq Nm | KG | Art.NR Code Art. Stock No. Art.Nr. | € |
|---|---|---|---|---|---|---|---|---|---|---|---|---|---|---|---|
| M 8 x 1,25 | 0.3 | 30 | 35 | 35 | 10 | 11 | 85 | 55 | 29 | 6 | 13 | 30 | 0,2 | 8-211-003 | |
| M10 x 1,5 | 0.63 | 30 | 35 | 36 | 10 | 16 | 85 | 55 | 29 | 6 | 17 | 60 | 0,3 | 8-211-006 | |
| M12 x 1,75 | 1.0 | 33 | 37 | 44 | 14 | 18 | 98 | 57 | 36 | 8 | 19 | 100 | 0,5 | 8-211-010 | |
| M14 x 2 | 1.2 | 33 | 37 | 45 | 14 | 21 | 98 | 57 | 36 | 10 | 22 | 120 | 0,5 | 8-211-012 | |
| M16 x 2 | 1.5 | 33 | 37 | 46 | 14 | 24 | 98 | 57 | 36 | 10 | 24 | 150 | 0,5 | 8-211-015 | |
| M18 x 2 | 2.0 | 50 | 54 | 57 | 17 | 26 | 140 | 82 | 44 | 12 | 30 | 200 | 1,3 | 8-211-020 | |
| M20 x 2,5 | 2.5 | 50 | 54 | 57 | 17 | 30 | 140 | 82 | 44 | 12 | 30 | 250 | 1,3 | 8-211-025 | |
| M24 x 3 | 4.0 | 50 | 54 | 59 | 17 | 36 | 140 | 82 | 44 | 14 | 36 | 400 | 1,4 | 8-211-040 | |
| M27 x 3 | 4.0 | 60 | 65 | 79 | 23 | 38 | 170 | 99 | 62 | 17 | 41 | 400 | 2,8 | 8-211-042 | |
| M30 x 3,5 | 5.0 | 60 | 65 | 81 | 23 | 48 | 170 | 99 | 62 | 17 | 46 | 500 | 3,1 | 8-211-050 | |
| M36 x 4 | 7.0 | 60 | 65 | 88 | 23 | 54 | 178 | 99 | 65 | 22 | 55 | 700 | 3,3 | 8-211-070 | |
| M36 x 4 | 8.0 | 77 | 85 | 101 | 27 | 62 | 225 | 124 | 78 | 22 | 55 | 800 | 5,8 | 8-211-080 | |
| M42 x 4,5 | 10.0 | 77 | 85 | 104 | 27 | 72 | 225 | 124 | 78 | 24 | 65 | 1000 | 6,3 | 8-211-100 | |
| M42 x 4,5 | 15.0 | 95 | 104 | 112 | 36 | 63 | 256 | 158 | 86 | 24 | 65 | 1500 | 10,8 | 8-211-150 | |
| M48 x 5 | 20.0 | 95 | 104 | 120 | 36 | 72 | 259 | 158 | 90 | 27 | 75 | 2000 | 11,6 | 8-211-200 | |



Safety Factor 4:1

| Number of legs | 1 | 2 | 1 | 2 | 2 | | | 3-4 | | |
|---|---|---|---|---|---|---|---|---|---|---|
| Load direction:β | β=0° | β=0° | β=90° | β=90° | 0°<β≤45° | 45°<β≤60° | Unsymm. | 0°<β≤45° | 45°<β≤60° | Unsymm. |
| Nominale maat Désignation Nominal size Nenngrösse |  |  |  |  |  | |  |  | |  |
| M 8 x 1,25 | 0.3 | 0.6 | 0.3 | 0.6 | 0.42 | 0.3 | 0.3 | 0.63 | 0.45 | 0.3 |
| M10 x 1,5 | 0.63 | 1.26 | 0.63 | 1.26 | 0.88 | 0.63 | 0.63 | 1.32 | 0.95 | 0.63 |
| M12 x 1,75 | 1.0 | 2.0 | 1.0 | 2.0 | 1.4 | 1.0 | 1.0 | 2.1 | 1.5 | 1.0 |
| M14 x 2 | 1.2 | 2.4 | 1.2 | 2.4 | 1.7 | 1.2 | 1.2 | 2.5 | 1.8 | 1.2 |
| M16 x 2 | 1.5 | 3.0 | 1.5 | 3.0 | 2.1 | 1.5 | 1.5 | 3.1 | 2.2 | 1.5 |
| M18 x 2 | 2.0 | 4.0 | 2.0 | 4.0 | 2.8 | 2.0 | 2.0 | 4.2 | 3.0 | 2.0 |
| M20 x 2,5 | 2.5 | 5.0 | 2.5 | 5.0 | 3.5 | 2.5 | 2.5 | 5.2 | 3.7 | 2.5 |
| M24 x 3 | 4.0 | 8.0 | 4.0 | 8.0 | 5.6 | 4.0 | 4.0 | 8.4 | 6.0 | 4.0 |
| M27 x 3 | 4.0 | 8.0 | 4.0 | 8.0 | 5.6 | 4.0 | 4.0 | 8.4 | 6.0 | 4.0 |
| M30 x 3,5 | 5.0 | 10.0 | 5.0 | 10.0 | 7.0 | 5.0 | 5.0 | 10.5 | 7.5 | 5.0 |
| M36 x 4 | 7.0 | 14.0 | 7.0 | 14.0 | 9.8 | 7.0 | 7.0 | 14.7 | 10.5 | 7.0 |
| M36 x 4 | 8.0 | 16.0 | 8.0 | 16.0 | 11.2 | 8.0 | 8.0 | 16.8 | 12.0 | 8.0 |
| M42 x 4,5 | 10.0 | 20.0 | 10.0 | 20.0 | 14.0 | 10.0 | 10.0 | 21.0 | 15.0 | 10.0 |
| M42 x 4,5 | 15.0 | 30.0 | 15.0 | 30.0 | 21.0 | 15.0 | 15.0 | 31.5 | 22.5 | 15.0 |
| M48 x 5 | 20.0 | 40.0 | 20.0 | 40.0 | 28.0 | 20.0 | 20.0 | 42.0 | 30.0 | 20.0 |

**WLL [t]**

| Schroefbaar hijsoog | Anneau de levage émerillon à étrier | Rotating Eyebolt | Lastbock |
|---|---|---|---|
| 360° Rotatie – 180°Pivot | 360° Rotation – 180°Pivot | 360° Rotation – 180°Pivot | 360° Rotation – 180°Pivot |
| Type Y8-211L | Type Y8-211L | Type Y8-211L | Type Y8-211L |

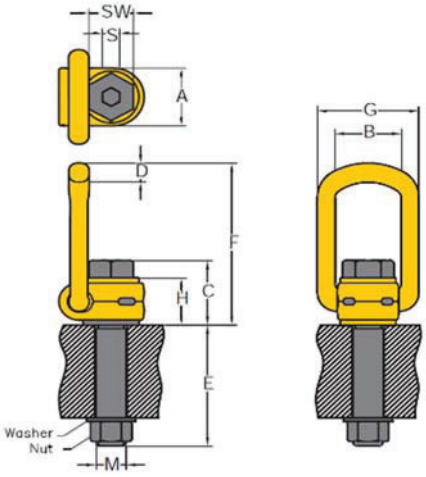





| Nominale maat<br>Désignation<br>Nominal size<br>Nenngrösse | WLL<br>[t] | A<br>mm | B<br>mm | C<br>mm | D<br>mm | E<br>mm | F<br>mm | G<br>mm | H<br>mm | S<br>mm | SW<br>mm | Torq<br>Nm | KG | Art.NR<br>Code Art.<br>Stock No.<br>Art.Nr. | € |
|---|---|---|---|---|---|---|---|---|---|---|---|---|---|---|---|
| M 8 x 1,25 | 0,3 | 30 | 35 | 35 | 10 | 76 | 85 | 55 | 29 | 6 | 13 | 30 | 0,3 | 8-211-003/105L | |
| M10 x 1,5 | 0,63 | 30 | 35 | 36 | 10 | 96 | 85 | 55 | 29 | 6 | 17 | 60 | 0,3 | 8-211-006/125L | |
| M12 x 1,75 | 1 | 33 | 37 | 44 | 14 | 114 | 98 | 57 | 36 | 8 | 19 | 100 | 0,5 | 8-211-010/150L | |
| M16 x 2 | 1,5 | 33 | 37 | 46 | 14 | 149 | 98 | 57 | 36 | 10 | 24 | 150 | 0,5 | 8-211-015/185L | |
| M20 x 2,5 | 2,5 | 50 | 54 | 57 | 17 | 186 | 140 | 82 | 44 | 12 | 30 | 250 | 1,3 | 8-211-025/230L | |
| M24 x 3 | 4 | 50 | 54 | 59 | 17 | 221 | 140 | 82 | 44 | 14 | 36 | 400 | 2,9 | 8-211-040/265L | |
| M30 x 3,5 | 5 | 60 | 65 | 81 | 23 | 278 | 170 | 99 | 62 | 17 | 46 | 500 | 3,2 | 8-211-050/340L | |
| M36 x 4 | 8 | 77 | 85 | 101 | 27 | 222 | 225 | 124 | 78 | 22 | 55 | 800 | 5,8 | 8-211-080/300L | |
| M42 x 4,5 | 10 | 77 | 85 | 104 | 27 | 272 | 225 | 124 | 78 | 24 | 65 | 1000 | 6,2 | 8-211-100/350L | |
| M42 x 4,5 | 15 | 95 | 104 | 112 | 36 | 264 | 256 | 158 | 86 | 24 | 65 | 1500 | 11 | 8-211-150/350L | |
| M48 x 5 | 20 | 95 | 104 | 120 | 36 | 295 | 259 | 158 | 90 | 27 | 75 | 2000 | 11,6 | 8-211-200/385L | |



Safety Factor 4:1

| Number of legs | 1 | 2 | 1 | 2 | 2 | | | 3-4 | | |
|---|---|---|---|---|---|---|---|---|---|---|
| Load direction:β | β=0° | β=0° | β=90° | β=90° | 0°<β≤45° | 45°<β≤60° | Unsymm. | 0°<β≤45° | 45°<β≤60° | Unsymm. |
| Nominale maat<br>Désignation<br>Nominal size<br>Nenngrösse |  |  |  |  |  | |  |  | |  |
| **WLL [t]** | | | | | | | | | | |
| M 8 x 1,25 | 0.3 | 0.6 | 0.3 | 0.6 | 0.42 | 0.3 | 0.3 | 0.63 | 0.45 | 0.3 |
| M10 x 1,5 | 0.63 | 1.26 | 0.63 | 1.26 | 0.88 | 0.63 | 0.63 | 1.32 | 0.95 | 0.63 |
| M12 x 1,75 | 1.0 | 2.0 | 1.0 | 2.0 | 1.4 | 1.0 | 1.0 | 2.1 | 1.5 | 1.0 |
| M16 x 2 | 1.5 | 3.0 | 1.5 | 3.0 | 2.1 | 1.5 | 1.5 | 3.1 | 2.2 | 1.5 |
| M20 x 2,5 | 2.5 | 5.0 | 2.5 | 5.0 | 3.5 | 2.5 | 2.5 | 5.2 | 3.7 | 2.5 |
| M24 x 3 | 4.0 | 8.0 | 4.0 | 8.0 | 5.6 | 4.0 | 4.0 | 8.4 | 6.0 | 4.0 |
| M30 x 3,5 | 5.0 | 10.0 | 5.0 | 10.0 | 7.0 | 5.0 | 5.0 | 10.5 | 7.5 | 5.0 |
| M36 x 4 | 8.0 | 16.0 | 8.0 | 16.0 | 11.2 | 8.0 | 8.0 | 16.8 | 12.0 | 8.0 |
| M42 x 4,5 | 10.0 | 20.0 | 10.0 | 20.0 | 14.0 | 10.0 | 10.0 | 21.0 | 15.0 | 10.0 |
| M42 x 4,5 | 15.0 | 30.0 | 15.0 | 30.0 | 21.0 | 15.0 | 15.0 | 31.5 | 22.5 | 15.0 |
| M48 x 5 | 20.0 | 40.0 | 20.0 | 40.0 | 28.0 | 20.0 | 20.0 | 42.0 | 30.0 | 20.0 |



# SLUITINGEN & SPANNERS
# MANILLES & TENDEURS
# SHACKLES &TURNBUCKLES
# SCHÄKEL & SPANNSCHRAUBEN

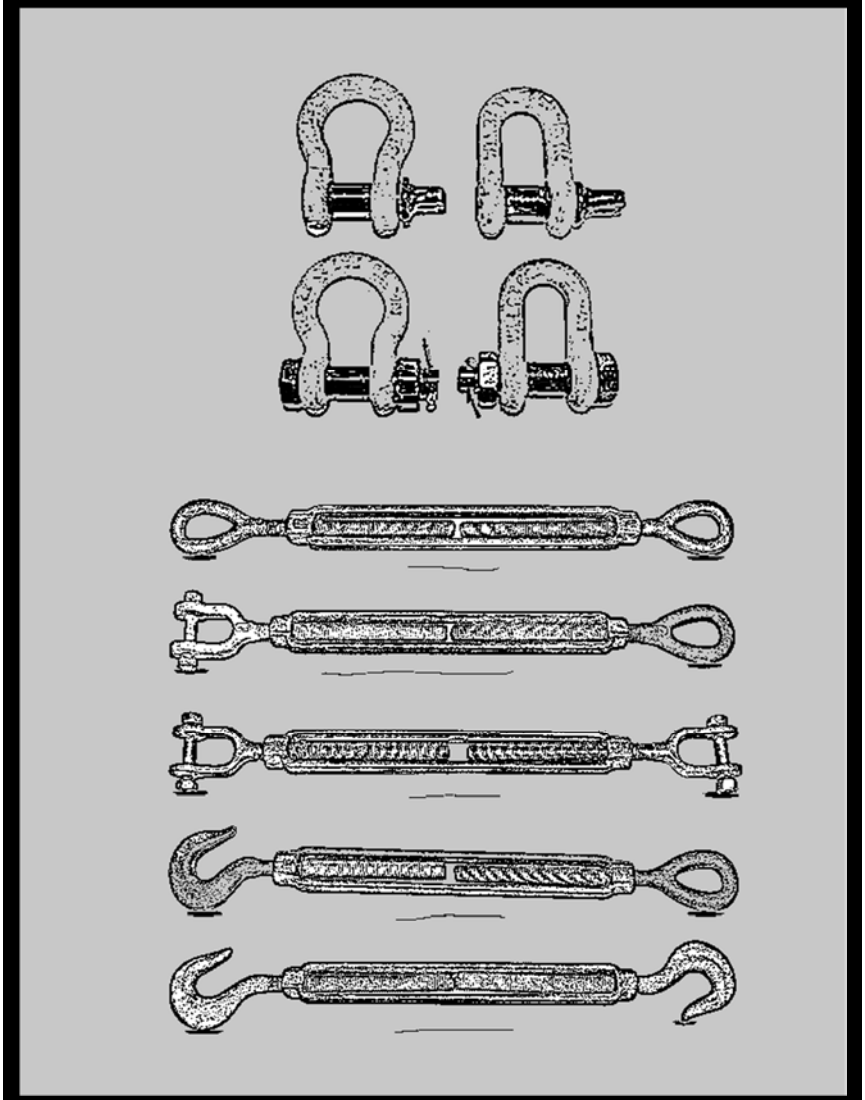

- US-TYPE
- EN 13889
- WIDE BODY
- STEEL SHEET PILES
- DIN 82101-PLUS
- ASTM-F1145

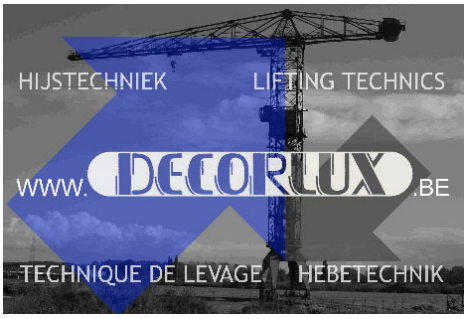

**D-Sluiting** Hoogwaardig staal – verzinkt met moerbout & splitpen Type DM
**D-Manille** Arcier - haute resistance – galvanisè avec boullon&goupille Type DM
**D-Shackle** High Tensile – galvanised with bolt & nut-cotter pin Type DM
**D-Schäkel** Hochfest – verzinkt mit mutter & splint Type DM

| Nominale maat Désignation Nominal size Nenngrösse | WLL [t] | A mm | B mm | C mm | D mm | F mm | G mm | KG | Art.NR Code Art. Stock No. Art.Nr. | € |
|---|---|---|---|---|---|---|---|---|---|---|
| 1/4" | 0.50 | 12 | 6.4 | 19.1 | 7.9 | 16 | 6 | 0.06 | C53DM0050 | |
| 5/16" | 0.75 | 13.5 | 7.9 | 25.4 | 9.7 | 19 | 8 | 0,11 | C53DM0075 | |
| 3/8" | 1.00 | 17 | 9.7 | 31 | 11.1 | 23 | 10 | 0,15 | C53DM0100 | |
| 7/16" | 1.50 | 19 | 11.2 | 36.1 | 12.7 | 27 | 11 | 0,22 | C53DM0150 | |
| 1/2" | 2.00 | 20.5 | 12.7 | 41.4 | 16 | 30 | 13 | 0,35 | C53DM0200 | |
| 5/8" | 3.25 | 27 | 16 | 50.8 | 19.1 | 39 | 16 | 0,76 | C53DM0325 | |
| 3/4" | 4.75 | 32 | 19.1 | 60.5 | 22.4 | 47 | 19 | 1,24 | C53DM0475 | |
| 7/8" | 6.50 | 36.5 | 22.4 | 71.4 | 25.4 | 54 | 22 | 1,80 | C53DM0650 | |
| 1" | 8.50 | 43 | 25.4 | 81 | 28.7 | 60 | 25 | 2,60 | C53DM0850 | |
| 1 1/8" | 9.50 | 46 | 28.7 | 90.9 | 31.8 | 68 | 29 | 3,80 | C53DM0950 | |
| 1 1/4" | 12.00 | 51.5 | 31.8 | 100 | 35.1 | 76 | 32 | 5,30 | C53DM1200 | |
| 1 3/8" | 13.50 | 57 | 35.1 | 101.2 | 38.1 | 84 | 35 | 7,20 | C53DM1350 | |
| 1 1/2" | 17.00 | 60.5 | 38.1 | 122.1 | 41.4 | 92 | 38 | 9,50 | C53DM1700 | |
| 1 3/4" | 25.00 | 73 | 44.5 | 146 | 50.8 | 107 | 45 | 15,40 | C53DM2500 | |
| 2" | 35.00 | 83 | 50 | 171 | 57 | 122 | 51 | 23,80 | C53DM3500 | |
| 2 1/2" | 55.00 | 105 | 66.5 | 203.2 | 69.9 | 145 | 64 | 45,00 | C53DM5500 | |
| 3" | 85.00 | 127 | 76.2 | 215.9 | 82.6 | 165 | 76.2 | 56.41 | C53DM8500 | |
| 3"1/2" | 120.0 | 146 | 90 | 267 | 95 | 203 | 92.2 | 92.2 | C53DM120T | |

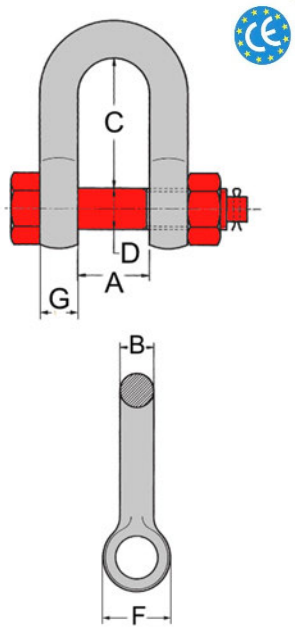


Markering: CE,WLL,Nom,Maat
Markage avec CE,CMU,Désignation
Marked with CE,WLL, Nominal Size
Gestempelt mit CE,WLL,Nenngrösse

**D-Sluiting** Hoogwaardig staal – verzinkt met borstbout Type DB
**D-Manille** Arcier - haute resistance – galvanisè avec boullon vissée Type DB
**D-Shackle** High Tensile – galvanised with Screwpin Type DB
**D-Schäkel** Hochfest – verzinkt mit Schraubbolzen Type DB

| Nominale maat Désignation Nominal size Nenngrösse | WLL [t] | A mm | B mm | C mm | D mm | F inch | G mm | KG | Art.NR Code Art. Stock No. Art.Nr. | € |
|---|---|---|---|---|---|---|---|---|---|---|
| 3/16" | 0.33 | 9,5 | 5 | 19 | 6 | 15 | 6 | 0,02 | C51DB0033 | |
| 1/4" | 0.50 | 11,9 | 6,4 | 22,4 | 7,9 | 16 | 6 | 0,05 | C51DB0050 | |
| 5/16" | 0.75 | 13,5 | 7,9 | 26,2 | 9,7 | 19 | 8 | 0,07 | C51DB0075 | |
| 3/8" | 1.00 | 16,8 | 9,7 | 31,8 | 11,2 | 23 | 10 | 0,12 | C51DB0100 | |
| 7/16" | 1.50 | 19,1 | 11,2 | 36,6 | 12,7 | 27 | 11 | 0,19 | C51DB0150 | |
| 1/2" | 2.00 | 20.6" | 12,7 | 41,4 | 16 | 30 | 13 | 0.27 | C51DB0200 | |
| 5/8" | 3.25 | 26,9 | 16 | 50,8 | 19,1 | 39 | 16 | 0,56 | C51DB0325 | |
| 3/4" | 4.75 | 31,8 | 19,1 | 60,5 | 22,4 | 47 | 19 | 1,19 | C51DB0475 | |
| 7/8" | 6.50 | 36,6 | 25,4 | 71,3 | 25,4 | 54 | 22 | 1,43 | C51DB0650 | |
| 1" | 8.50 | 42,9 | 25,4 | 81 | 28,7 | 60 | 25 | 2,15 | C51DB0850 | |
| 1 1/8" | 9.50 | 46 | 28,7 | 90,9 | 31,8 | 68 | 29 | 3,06 | C51DB0950 | |
| 1 1/4" | 12.00 | 51,6 | 31,8 | 100 | 35,1 | 76 | 32 | 4,11 | C51DB1200 | |
| 1 3/8" | 13.50 | 57,2 | 35,1 | 111,2 | 38,1 | 84 | 35 | 5,28 | C51DB1350 | |
| 1 1/2" | 17.00 | 60,5 | 38,1 | 122,1 | 41,4 | 92 | 38 | 7,24 | C51DB1700 | |
| 1 3/4" | 25.00 | 73,2 | 44,5 | 146 | 50,8 | 107 | 45 | 12,14 | C51DB2500 | |
| 2" | 35.00 | 82,6 | 50,8 | 171,4 | 57,2 | 122 | 51 | 19,20 | C51DB3500 | |
| 2 1/2" | 55.00 | 104.9 | 66.5 | 203.2 | 69.9 | 145 | 64 | 32.60 | C51DB5500 | |
| 3" | 85.00 | 127 | 75 | 230 | 80 | 165 | 76.2 | 56.68 | C51DB8500 | |

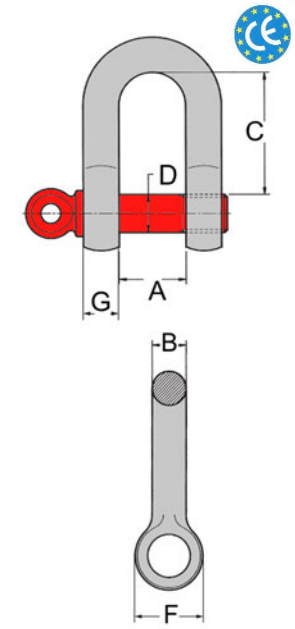


Markering: CE,WLL,Nom,Maat
Markage avec CE,CMU,Désignation
Marked with CE,WLL, Nominal Size
Gestempelt mit CE,WLL,Nenngrösse

**Harpsluiting** | **Manille formé lyre** | **Anchor-Shackle** | **Schäkel Geschweifte Form**
Hoogwaardig staal – verzinkt | Arcier - haute resistance – galvanisè | High Tensile – galvanised | Hochfest – verzinkt
met borstbout | avec boullon vissée | with Screwpin | mit Schraubbolzen
Type AB | Type AB | Type AB | Type AB

| Nominale maat Désignation Nominal size Nenngrösse | WLL [t] | A mm | B mm | C mm | D mm | E inch | F mm | G mm | KG | Art.NR Code Art. Stock No. Art.Nr. | € |
|---|---|---|---|---|---|---|---|---|---|---|---|
| 3/16" | 0.33 | 9,7 | 4,8 | 22,4 | 6,4 | 15,2 | 15 | 6 | 0,02 | C52AB0050 | |
| 1/4" | 0.50 | 11,9 | 6,4 | 28,7 | 7,9 | 19,8 | 16 | 6 | 0,04 | C52AB0050 | |
| 5/16" | 0.75 | 13,5 | 7,9 | 31 | 9,7 | 21,3 | 19 | 8 | 0,08 | C52AB0075 | |
| 3/8" | 1.00 | 16,8 | 9,7 | 36,6 | 11,2 | 26,2 | 23 | 10 | 0,14 | C52AB0100 | |
| 7/16" | 1.50 | 19,1 | 11,2 | 42,9 | 12,7 | 29,5 | 27 | 11 | 0,17 | C52AB0150 | |
| 1/2" | 2.00 | 20,6 | 12,7 | 47,8 | 16 | 33,3 | 30 | 13 | 0,32 | C52AB0200 | |
| 5/8" | 3.25 | 26,9 | 16 | 60,5 | 19,1 | 42,9 | 39 | 16 | 0,62 | C52AB0325 | |
| 3/4" | 4.75 | 31,8 | 19,1 | 71,4 | 22,4 | 50,8 | 47 | 19 | 1,06 | C52AB0475 | |
| 7/8" | 6.50 | 36,6 | 22,4 | 84,1 | 25,4 | 57,9 | 54 | 22 | 1,64 | C52AB0650 | |
| 1" | 8.50 | 42,9 | 25,4 | 95,3 | 28,7 | 68,3 | 60 | 25 | 2,28 | C52AB0850 | |
| 1 1/8" | 9.50 | 46 | 29,5 | 107,9 | 31,8 | 73,9 | 68 | 29 | 3,36 | C52AB0950 | |
| 1 1/4" | 12.00 | 51,6 | 32,8 | 119,1 | 35,1 | 82,6 | 76 | 32 | 4,31 | C52AB1200 | |
| 1 3/8" | 13.50 | 57,2 | 36,1 | 133,3 | 38,1 | 92,2 | 84 | 35 | 6,14 | C52AB1350 | |
| 1 1/2" | 17.00 | 60,5 | 39,1 | 146 | 41,4 | 98,6 | 92 | 38 | 7,80 | C52AB1700 | |
| 1 3/4" | 25.00 | 73,2 | 46,7 | 177,8 | 50,8 | 127 | 107 | 45 | 12,61 | C52AB2500 | |
| 2" | 35.00 | 82,6 | 52,8 | 196,8 | 57,2 | 146 | 122 | 51 | 20,43 | C52AB3500 | |
| 2 1/2" | 55.00 | 104,9 | 68,8 | 266,7 | 69,9 | 186,1 | 145 | 64 | 38,93 | C52AB5500 | |
| 3" | 85.00 | 127 | 75 | 330 | 80 | 190 | 165 | 76.2 | 62.24 | C52AB8500 | |

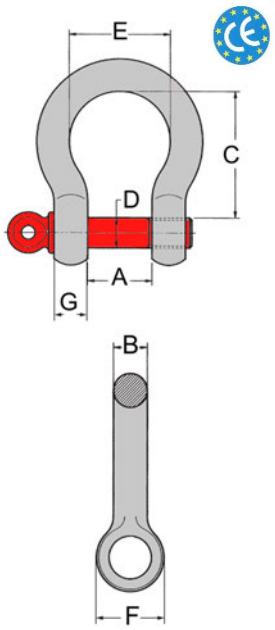


Markering: CE,WLL,Nom,Maat
Markage avec CE,CMU,Désignation
Marked with CE,WLL, Nominal Size
Gestempelt mit CE,WLL,Nenngrösse

**Harpsluiting** | **Manille formé lyre** | **Anchor-Shackle** | **Schäkel Geschweifte Form**
Hoogwaardig staal – verzinkt | Arcier - haute resistance – galvanisè | High Tensile – galvanised | Hochfest – verzinkt
met moerbout & splitpen | avec boullon&goupille | with bolt & nut-cotter pin | mit mutter & splint
Type AM | Type AM | Type AM | Type AM

| Nominale maat Désignation Nominal size Nenngrösse | WLL [t] | A mm | B mm | C mm | D mm | E inch | F mm | G mm | KG | Art.NR Code Art. Stock No. Art.Nr. | € |
|---|---|---|---|---|---|---|---|---|---|---|---|
| 1/4" | 0.50 | 11,9 | 6,4 | 28,7 | 7,9 | 19,8 | 16 | 6 | 0,05 | C54AM0050 | |
| 5/16" | 0.75 | 13,5 | 7,9 | 31 | 9,7 | 21,3 | 19 | 8 | 0,10 | C54AM0075 | |
| 3/8" | 1.00 | 16,8 | 9,7 | 36,6 | 11,2 | 26,2 | 23 | 10 | 0,15 | C54AM0100 | |
| 7/16" | 1.50 | 19,1 | 11,2 | 42,9 | 12,7 | 29,5 | 27 | 11 | 0,22 | C54AM0150 | |
| 1/2" | 2.00 | 20,6 | 12,7 | 47,8 | 16 | 33,3 | 30 | 13 | 0,35 | C54AM0200 | |
| 5/8" | 3.25 | 26,9 | 16 | 60,5 | 19,1 | 42,9 | 39 | 16 | 0,76 | C54AM0325 | |
| 3/4" | 4.75 | 31,8 | 19,1 | 71,4 | 22,4 | 50,8 | 47 | 19 | 1,23 | C54AM0475 | |
| 7/8" | 6.50 | 36,6 | 22,4 | 84,1 | 25,4 | 57,9 | 54 | 22 | 1,79 | C54AM0650 | |
| 1" | 8.50 | 42,9 | 25,4 | 95,3 | 28,7 | 68,3 | 60 | 25 | 2,57 | C54AM0850 | |
| 1 1/8" | 9.50 | 46 | 28,7 | 107,9 | 31,8 | 73,9 | 68 | 29 | 3,75 | C54AM0950 | |
| 1 1/4" | 12.00 | 51,6 | 31,8 | 119,1 | 35,1 | 82,6 | 76 | 32 | 5,31 | C54AM1200 | |
| 1 3/8" | 13.50 | 57,2 | 35,1 | 133,3 | 38,1 | 92,2 | 84 | 35 | 7,13 | C54AM1350 | |
| 1 1/2" | 17.00 | 60,5 | 38,1 | 146 | 41,4 | 98,6 | 92 | 38 | 9,44 | C54AM1700 | |
| 1 3/4" | 25.00 | 73,2 | 44,5 | 177,8 | 50,8 | 127 | 107 | 45 | 15,39 | C54AM2500 | |
| 2" | 35.00 | 82,5 | 50,8 | 196,8 | 57,2 | 146 | 122 | 51 | 23,72 | C54AM3500 | |
| 2 1/2" | 55.00 | 104,9 | 66,6 | 266,7 | 69,9 | 186,1 | 145 | 64 | 44,60 | C54AM5500 | |
| 3" | 85.00 | 127 | 76.2 | 330.2 | 82.6 | 200.1 | 165 | 76.2 | 69.91 | C54AM8500 | |
| 3"1/2" | 120.0 | 133.3 | 91.9 | 371.6 | 95.3 | 228.6 | 203 | 92.2 | 120.3 | C54AM120T | |

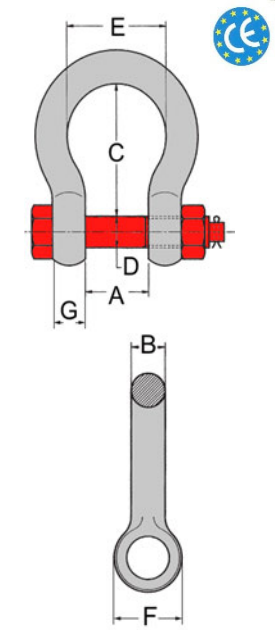


Markering: CE,WLL,Nom,Maat
Markage avec CE,CMU,Désignation
Marked with CE,WLL, Nominal Size
Gestempelt mit CE,WLL,Nenngrösse

**D-Sluiting** - EN 13889
Grade 60 – verzinkt
met moerbout & splitpen
Type DME

**D-Manille** - EN 13889
Grade 60 – galvanisè
avec boullon&goupille
Type DME

**D-Shackle** - EN 13889
Grade 60 – galvanised
with bolt & nut-cotter pin
Type DME

**D-Schäkel** - EN 13889
Grade 60 – verzinkt
mit mutter & splint
Type DME

| Nominale maat<br>Désignation<br>Nominal size<br>Nenngrösse | WLL<br>[t] | A<br>mm | B<br>mm | C<br>mm | D<br>mm | F<br>mm | G<br>mm | KG | Art.NR<br>Code Art.<br>Stock No.<br>Art.Nr. | € |
|---|---|---|---|---|---|---|---|---|---|---|
| 0,5 | 0.50 | 13 | 6,5 | 23 | 8 | 13 | 6,5 | 0,1 | C220DM0050 | |
| 0,75 | 0.75 | 13 | 8 | 26 | 10 | 13 | 8 | 0,1 | C220DM0075 | |
| 1 | 1.00 | 16 | 10 | 31 | 11 | 16 | 10 | 0,2 | C220DM0100 | |
| 1,5 | 1.50 | 18 | 11 | 36 | 13 | 18 | 11 | 0,2 | C220DM0150 | |
| 2 | 2.00 | 21 | 13 | 41 | 16 | 21 | 13 | 0,3 | C220DM0200 | |
| 3,25 | 3.25 | 27 | 16 | 51 | 19 | 27 | 16 | 0,6 | C220DM0325 | |
| 4,75 | 4.75 | 32 | 19 | 60 | 22 | 32 | 19 | 1 | C220DM0475 | |
| 6,5 | 6.50 | 36 | 22 | 71 | 25 | 36 | 22 | 1,5 | C220DM0650 | |
| 8,5 | 8.50 | 43 | 25 | 81 | 29 | 43 | 25 | 2,3 | C220DM0850 | |
| 9,5 | 9.50 | 46 | 29 | 90 | 32 | 46 | 29 | 3,1 | C220DM0950 | |
| 12 | 12.00 | 52 | 32 | 100 | 35 | 52 | 32 | 4,7 | C220DM1200 | |
| 13,5 | 13.50 | 57 | 35 | 113 | 38 | 57 | 35 | 6,1 | C220DM1350 | |
| 17 | 17.00 | 60 | 38 | 124 | 41 | 60 | 38 | 7,8 | C220DM1700 | |
| 25 | 25.00 | 73 | 44 | 146 | 51 | 73 | 44 | 13,1 | C220DM2500 | |

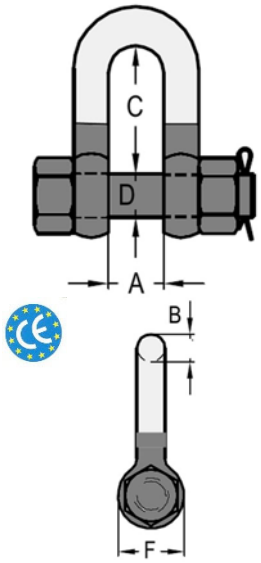


Markering: CE,WLL,Nom,Maat
Markage avec CE,CMU,Désignation
Marked with CE,WLL, Nominal Size
Gestempelt mit CE,WLL,Nenngrösse

TEMP.RANGE -20°>200°C

**D-Sluiting** - EN 13889
Grade 60 – verzinkt
met borstbout
Type DBE

**D-Manille** - EN 13889
Grade 60 – galvanisè
avec boullon vissée
Type DBE

**D-Shackle** - EN 13889
Grade 60 – galvanised
with Screwpin
Type DBE

**D-Schäkel** - EN 13889
Grade 60 – verzinkt
mit Schraubbolzen
Type DBE

| Nominale maat<br>Désignation<br>Nominal size<br>Nenngrösse | WLL<br>[t] | A<br>mm | B<br>mm | C<br>mm | D<br>mm | F<br>inch | G<br>mm | KG | Art.NR<br>Code Art.<br>Stock No.<br>Art.Nr. | € |
|---|---|---|---|---|---|---|---|---|---|---|
| 0,5 | 0.50 | 13 | 6,5 | 23 | 8 | 17 | 6,5 | 0,1 | C221DB0050 | |
| 0,75 | 0.75 | 13 | 8 | 26 | 10 | 21 | 8 | 0,1 | C221DB0075 | |
| 1 | 1.00 | 16 | 10 | 31 | 11 | 25 | 10 | 0,1 | C221DB0100 | |
| 1,5 | 1.50 | 18 | 11 | 36 | 13 | 27 | 11 | 0,2 | C221DB0150 | |
| 2 | 2.00 | 21 | 13 | 41 | 16 | 30 | 13 | 0,3 | C221DB0200 | |
| 3,25 | 3.25 | 27 | 16 | 51 | 19 | 40 | 16 | 0,5 | C221DB0325 | |
| 4,75 | 4.75 | 32 | 19 | 60 | 22 | 48 | 19 | 0,9 | C221DB0475 | |
| 6,5 | 6.50 | 36 | 22 | 71 | 25 | 54 | 22 | 1,4 | C221DB0650 | |
| 8,5 | 8.50 | 43 | 25 | 81 | 29 | 60 | 25 | 2 | C221DB0850 | |
| 9,5 | 9.50 | 46 | 29 | 90 | 32 | 67 | 29 | 2,8 | C221DB0950 | |
| 12 | 12.00 | 52 | 32 | 100 | 35 | 76 | 32 | 4,1 | C221DB1200 | |
| 13,5 | 13.50 | 57 | 35 | 113 | 38 | 84 | 35 | 5,2 | C221DB1350 | |
| 17 | 17.00 | 60 | 38 | 124 | 41 | 92 | 38 | 7,1 | C221DB1700 | |
| 25 | 25.00 | 73 | 44 | 146 | 51 | 110 | 44 | 11,6 | C221DB2500 | |

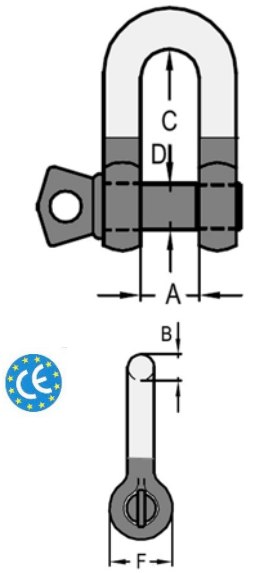


Markering: CE,WLL,Nom,Maat
Markage avec CE,CMU,Désignation
Marked with CE,WLL, Nominal Size
Gestempelt mit CE,WLL,Nenngrösse

TEMP.RANGE -20°>200°C

**Harpsluiting** - EN 13889
Grade 60 – verzinkt
met borstbout
Type ABE

**Manille formé lyre** - EN 13889
Grade 60 – galvanisè
avec boullon vissée
Type ABE

**Anchor-Shackle** - EN 13889
Grade 60 – galvanised
with Screwpin
Type ABE

**Schäkel Geschweifte Form** EN 13889
Grade 60 – verzinkt
mit Schraubbolzen
Type ABE

| Nominale maat<br>Désignation<br>Nominal size<br>Nenngrösse | WLL<br>[t] | A<br>mm | B<br>mm | C<br>mm | D<br>mm | E<br>inch | F<br>mm | G<br>mm | KG | Art.NR<br>Code Art.<br>Stock No.<br>Art.Nr. | € |
|---|---|---|---|---|---|---|---|---|---|---|---|
| 0,5 | 0.50 | 12 | 6,5 | 28 | 8 | 20 | 17 | 6,5 | 0,1 | C219AB0050 | |
| 0,75 | 0.75 | 13 | 8 | 31 | 10 | 21 | 21 | 8 | 0,1 | C219AB0075 | |
| 1 | 1.00 | 16 | 10 | 36 | 11 | 26 | 25 | 10 | 0,1 | C219AB0100 | |
| 1,5 | 1.50 | 18 | 11 | 42 | 13 | 29 | 27 | 11 | 0,2 | C219AB0150 | |
| 2 | 2.00 | 21 | 13 | 48 | 16 | 33 | 30 | 13 | 0,3 | C219AB0200 | |
| 3,25 | 3.25 | 27 | 16 | 60 | 19 | 43 | 40 | 16 | 0,5 | C219AB0325 | |
| 4,75 | 4.75 | 32 | 19 | 71 | 22 | 51 | 48 | 19 | 0,9 | C219AB0475 | |
| 6,5 | 6.50 | 36 | 22 | 84 | 25 | 58 | 54 | 22 | 1,5 | C219AB0650 | |
| 8,5 | 8.50 | 43 | 25 | 95 | 29 | 68 | 60 | 25 | 2,2 | C219AB0850 | |
| 9,5 | 9.50 | 46 | 29 | 108 | 32 | 74 | 67 | 29 | 3,1 | C219AB0950 | |
| 12 | 12.00 | 52 | 32 | 119 | 35 | 82 | 76 | 32 | 4,5 | C219AB1200 | |
| 13,5 | 13.50 | 57 | 35 | 133 | 38 | 92 | 84 | 35 | 5,9 | C219AB1350 | |
| 17 | 17.00 | 60 | 38 | 146 | 41 | 98 | 92 | 38 | 7,8 | C219AB1700 | |
| 25 | 25.00 | 73 | 44 | 178 | 51 | 127 | 110 | 44 | 13,1 | C219AB2500 | |

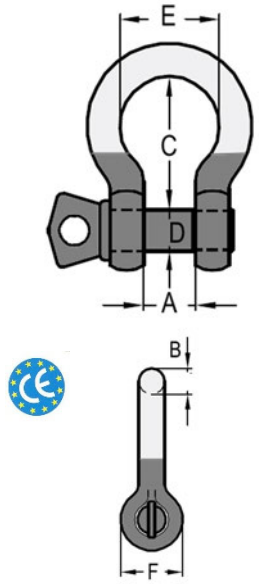


Markering: CE,WLL,Nom,Maat
Markage avec CE,CMU,Désignation
Marked with CE,WLL, Nominal Size
Gestempelt mit CE,WLL,Nenngrösse

TEMP.RANGE -20°>200°C

**Harpsluiting** - EN 13889
Grade 60 – verzinkt
met moerbout & splitpen
Type AME

**Manille formé lyre** - EN 13889
Grade 60 – galvanisè
avec boullon&goupille
Type AME

**Anchor-Shackle** - EN 13889
Grade 60 – galvanised
with bolt & nut-cotter pin
Type AME

**Schäkel Geschweifte Form** EN 13889
Grade 60 – verzinkt
mit mutter & splint
Type AME

| Nominale maat<br>Désignation<br>Nominal size<br>Nenngrösse | WLL<br>[t] | A<br>mm | B<br>mm | C<br>mm | D<br>mm | E<br>inch | F<br>mm | G<br>mm | KG | Art.NR<br>Code Art.<br>Stock No.<br>Art.Nr. | € |
|---|---|---|---|---|---|---|---|---|---|---|---|
| 0,5 | 0.50 | 12 | 6,5 | 28 | 8 | 20 | 17 | 6,5 | 0,1 | C218AM0050 | |
| 0,75 | 0.75 | 13 | 8 | 31 | 10 | 21 | 21 | 8 | 0,1 | C218AM0075 | |
| 1 | 1.00 | 16 | 10 | 36 | 11 | 26 | 25 | 10 | 0,2 | C218AM0100 | |
| 1,5 | 1.50 | 18 | 11 | 42 | 13 | 29 | 27 | 11 | 0,2 | C218AM0150 | |
| 2 | 2.00 | 21 | 13 | 48 | 16 | 33 | 30 | 13 | 0,3 | C218AM0200 | |
| 3,25 | 3.25 | 27 | 16 | 60 | 19 | 43 | 40 | 16 | 0,6 | C218AM0325 | |
| 4,75 | 4.75 | 32 | 19 | 71 | 22 | 51 | 48 | 19 | 1,1 | C218AM0475 | |
| 6,5 | 6.50 | 36 | 22 | 84 | 25 | 58 | 54 | 22 | 1,6 | C218AM0650 | |
| 8,5 | 8.50 | 43 | 25 | 95 | 29 | 68 | 60 | 25 | 2,4 | C218AM0850 | |
| 9,5 | 9.50 | 46 | 29 | 108 | 32 | 74 | 67 | 29 | 3,4 | C218AM0950 | |
| 12 | 12.00 | 52 | 32 | 119 | 35 | 82 | 76 | 32 | 5,1 | C218AM1200 | |
| 13,5 | 13.50 | 57 | 35 | 133 | 38 | 92 | 84 | 35 | 6,4 | C218AM1350 | |
| 17 | 17.00 | 60 | 38 | 146 | 41 | 98 | 92 | 38 | 8,4 | C218AM1700 | |
| 25 | 25.00 | 73 | 44 | 178 | 51 | 127 | 110 | 44 | 14,2 | C218AM2500 | |

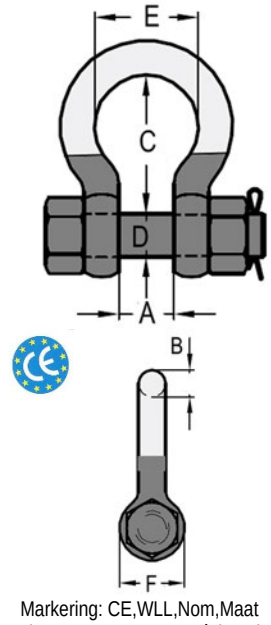


Markering: CE,WLL,Nom,Maat
Markage avec CE,CMU,Désignation
Marked with CE,WLL, Nominal Size
Gestempelt mit CE,WLL,Nenngrösse

TEMP.RANGE -20°>200°C

## Harpsluiting – WIDE BODY
Hoogwaardig staal – SF:5
met moerbout & splitpen
Type AMWB

## Manille formé lyre – WIDE BODY
Arcier - haute resistance – SF:5
avec boullon&goupille
Type AMWB

## Anchor-Shackle – WIDE BODY
High Tensile – SF:5
with bolt & nut-cotter pin
Type AMWB

## Schäkel Geschw. – WIDE BODY
Hochfest – SF:5
mit mutter & splint
Type AMWB



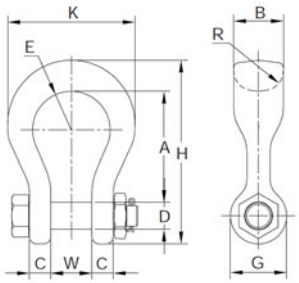


Fig. 1
19/26

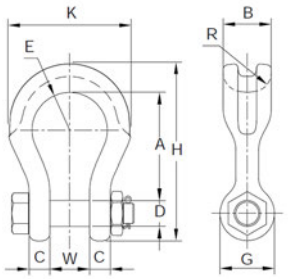


Fig. 2
32/38

| Nominale maat Désignation Nominal size Nenngrösse | SWL Ton | A mm | B mm | C mm | D mm | E mm | G mm | H mm | K mm | R mm | W mm | KG | Art.NR Code Art. Stock No. Art.Nr. | € |
|---|---|---|---|---|---|---|---|---|---|---|---|---|---|---|
| 19 | **7** | 91 | 41 | 18 | 22 | 32 | 46 | 150 | 104 | 32 | 33 | 1,7 | Y880919 | |
| 26 | **12.5** | 118 | 54 | 23 | 29 | 41 | 61 | 194 | 140 | 35 | 44 | 3,8 | Y880926 | |
| 32 | **18** | 148 | 64 | 30 | 36 | 51 | 68 | 238 | 172 | 38 | 54 | 6,7 | Y880932 | |
| 38 | **30** | 176 | 80 | 35 | 45 | 64 | 89 | 289 | 216 | 45 | 60 | 12,5 | Y880938 | |

- Markering: CE,WLL,Nom,Maat
- 100% Magnaflux tested
- Kwaliteit-traceerbaarheid

- Markage avec CE,CMU,Désignation
- 100% Magnaflux tested
- Traçabilité de la qualité

- Marked with CE,WLL, Nominal Size
- 100% Magnaflux tested
- Quality traceability

- Gestempelt mit CE,WLL,Nenngrösse
- 100% Magnaflux tested
- Qualität Rückverfolgbarkeit

## D-schakel voor damwand platen
met gepatenteerde Quick Lock
Type DWQ

## Manille pour palplanches en acier
avec Quick Lock breveté
Type DWQ

## Shackle for steel sheet piles
with patened Quick Lock
Type DWQ

## Spundwandbohlen-Schäkel
mit Patent-Schnellverschluss
Type DWQ

| Nominale maat Désignation Nominal size Nenngrösse | WLL CMU [t] | d1 mm | d2 mm | w mm | h mm | KG | Art.NR Code Art. Stock No. Art.Nr. | € |
|---|---|---|---|---|---|---|---|---|
| 2.5 | 2.5 | 25 | 30 | 50 | 250 | 4.8 | DWQ02500 | |
| 3.0 | 3.0 | 30 | 30 | 50 | 250 | 5.0 | DWQ03000 | |
| 5.0 | 5.0 | 36 | 30 | 50 | 250 | 5.9 | DWQ05000 | |
| 10.0 | 10.0 | 55 | 30 | 110 | 400 | 22.5 | DWQ10000 | |

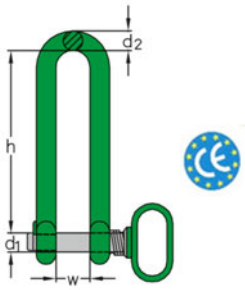


## D-beugel en moer uit één smeedstuk
volgens D-sluiting DIN 82101 form c
D-beugel en bout verzinkt
Type D-Sluiting Plus

## Manille et écrou forgés dans une matrice
Conforme manille DIN 82101 form c
Manille et boulon galvanisé
Type D-Sluiting Plus

## Shackle and nut forged in one die
Similar to shackle DIN 82101 form c
Bow and bolt galvanized
Type D-Shackle Plus

## Schäkel und Mutter einer Schmiedeform
Ähnlich Schäkel DIN 82101 Form C
Bügel und Bolzen verzinkt
Type D-Sluiting Plus

| Nominale maat Désignation Nominal size Nenngrösse | WLL CMU [t] | b1 | b2 | d1 | d2 | d3 | d4 | h1 | Kg | Art.NR Code Art. Stock No. Art.Nr. | € |
|---|---|---|---|---|---|---|---|---|---|---|---|
| 6-8 | 1,12 | 14 | 30 | 8 | 10 | 20 | M 10 | 30,0 | 0.09 | 0400004V | |
| 8-8 | 2,00 | 17 | 37 | 10 | 12 | 24 | M 12 | 36,0 | 0.20 | 0400006V | |
| 10-8 | 3,15 | 21 | 47 | 13 | 15 | 32 | M 16 | 49,0 | 0.40 | 0400010V | |
| 13-8 | 5,30 | 27 | 61 | 17 | 19 | 40 | M 20 | 61,0 | 0.81 | 0400016V | |
| 14-8 | 6,00 | 30 | 68 | 19 | 21 | 44 | M 22 | 67,0 | 1.08 | 0400020V | |
| 16-8 | 8,00 | 33 | 75 | 21 | 23 | 48 | M 24 | 73,0 | 1.42 | 0400025V | |
| 18-8 | 10,00 | 38 | 86 | 24 | 26 | 54 | M 27 | 83,5 | 2.03 | 0400030V | |
| 20-8 | 12,50 | 42 | 96 | 27 | 29 | 60 | M 30 | 91,0 | 2.70 | 0400040V | |
| 22-8 | 15,00 | 47 | 107 | 30 | 33 | 72 | M 36 | 111,0 | 4.40 | 0400050V | |
| 26-8 | 21,20 | 53 | 121 | 34 | 37 | 78 | M 39 | 119,5 | 5.90 | 0400060V | |

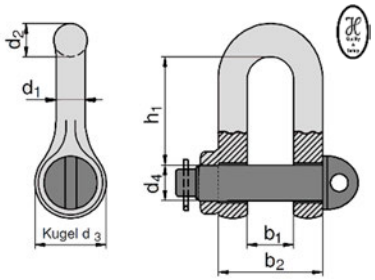


Markering: CE,WLL,Nom,Maat
Markage avec E,CMU,Désignation
Marked with CE,WLL, Nominal Size
Gestempelt mit CE,WLL,Nenngrösse

| Spanschroef – extra lang<br>Type JJ: gaffel / gaffel<br>Met borgmoer;<br>moerbout & splitpen<br>Alloy staal & gesmeed<br>Vuurverzinkt | Tendeur – extra longue<br>Type JJ: chape / chape<br>Avec contre-écrou;<br>boulon d'écrou et goupille de sécurité<br>Arcier Allié & Forgée<br>Galvanisé à chaud | Turnbuckle – extra long<br>Type JJ: jaw / jaw<br>With lock nut;<br>nut bolt & cotter pin<br>Alloy steel & forged<br>Hot Dip-Galvanised | Spannschraube -extra lang<br>Typ JJ: gabel / gabel<br>Mit Kontermutter<br>Mutter, Bolzen und Splint<br>Alloy Stahl & geschmiedet<br>Feuerverzinkt |
|---|---|---|---|

| Nominale maat<br>Désignation<br>Nominal size<br>Nenngrösse | l1<br>mm | l2<br>mm | w<br>mm | h<br>mm | g<br>inch | k<br>mm | WLL<br>[t] | KG | Art.NR<br>Code Art.<br>Stock No.<br>Art.Nr. | € |
|---|---|---|---|---|---|---|---|---|---|---|
| 3/8 x 6” | 180 | 152 | 12 | 22 | 2 1/2 | 137 | 0,54 | 0,5 | 163403806 | |
| 1/2 x 6” | 190 | 152 | 16 | 27 | 3/8 | 147 | 1 | 0,8 | 163401206 | |
| 1/2 x 9” | 266 | 228 | 16 | 27 | 3/8 | 187 | 1 | 0,9 | 163401209 | |
| 1/2 x 12” | 342 | 304 | 16 | 27 | 3/8 | 222 | 1 | 1,1 | 163401212 | |
| 5/8 x 6” | 200 | 152 | 19 | 33 | 1/2 | 161 | 1,59 | 1,3 | 163405806 | |
| 5/8 x 9” | 276 | 228 | 19 | 33 | 1/2 | 201 | 1,59 | 1,5 | 163405809 | |
| 5/8 x 12” | 352 | 304 | 19 | 33 | 1/2 | 236 | 1,59 | 1,7 | 163405812 | |
| 5/8 x 18” | 505 | 457 | 19 | 33 | 1/2 | 316 | 1,59 | 2,2 | 163405818 | |
| 3/4 x 6” | 210 | 152 | 23 | 38 | 5/8 | 173 | 2,36 | 2 | 163403406 | |
| 3/4 x 9” | 287 | 228 | 23 | 38 | 5/8 | 213 | 2,36 | 2,4 | 163403409 | |
| 3/4 x 12” | 362 | 304 | 23 | 38 | 5/8 | 248 | 2,36 | 2,7 | 163403412 | |
| 3/4 x 18” | 515 | 457 | 23 | 38 | 5/8 | 328 | 2,36 | 3,4 | 163403418 | |
| 7/8 x 12” | 372 | 304 | 28 | 44 | 3/4 | 266 | 3,27 | 4 | 163407812 | |
| 7/8 x 18” | 524 | 457 | 28 | 44 | 3/4 | 346 | 3,27 | 4,9 | 163407818 | |
| 1 x 12” | 381 | 304 | 30 | 52 | 7/8 | 286 | 4,54 | 5,6 | 163410012 | |
| 1 x 18” | 533 | 457 | 30 | 52 | 7/8 | 366 | 4,54 | 6,8 | 163410018 | |
| 1 ¼ x 12” | 387 | 304 | 44 | 71 | 1 1/8 | 330 | 6,89 | 9,8 | 163411412 | |
| 1 ¼ x 18” | 540 | 457 | 44 | 71 | 1 1/8 | 380 | 6,89 | 11,6 | 163411418 | |
| 1 ¼ x 24” | 693 | 610 | 44 | 71 | 1 1/8 | 479 | 6,89 | 13,6 | 163411424 | |
| 1 ½ x 12” | 400 | 304 | 52 | 71 | 1 3/8 | 360 | 9,71 | 15,4 | 163411212 | |
| 1 ½ x 18” | 550 | 457 | 52 | 71 | 1 3/8 | 430 | 9,71 | 18 | 163411218 | |
| 1 ½ x 24” | 703 | 610 | 52 | 71 | 1 3/8 | 430 | 9,71 | 19,3 | 163411224 | |
| 1 ¾ x 18” | 570 | 457 | 60 | 86 | 1 3/4 | 465 | 12,7 | 23,6 | 163413418 | |
| 1 ¾ x 24” | 720 | 610 | 60 | 86 | 1 3/4 | 500 | 12,7 | 26,8 | 163413424 | |
| 2 x 24” | 735 | 610 | 64 | 95 | 2 | 610 | 16,78 | 45 | 163420024 | |
| 2 ½ x 24” | 800 | 610 | 73 | 113 | 2 1/2 | 620 | 27,22 | 81 | 163421224 | |
| 3 ¾ x 24 | 800 | 610 | 89 | 106 | 2 3/4 | 610 | 34,02 | 91 | 163423424 | |

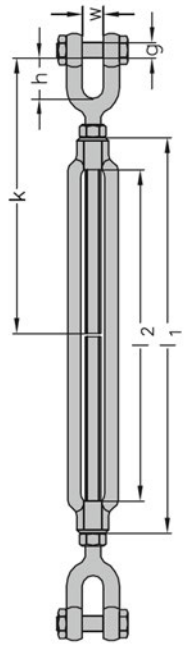


SF 5:1

No Lifting Use - Only static & in line Loads – Marking: Nominal Size, Batch code, L (Left-Hand Thread)

Temp./ WLL Reduction factors : (-20°C ⇔ -10°C=50%) * (-10°C⇔ 0°C=75%) * (0°C ⇔ 100°C=100%) * (100°C ⇔ 150°C=75%) * (150°C ⇔ 200°C:50%)

Subject to minor tolerances

| Spanschroef –extra lang<br>Type EE: oog / oog<br>Met borgmoer;<br>Alloy staal & gesmeed<br>Vuurverzinkt | Tendeur –extra longue<br>Type EE: oeil / oeil<br>Avec contre-écrou;<br>Arcier Allié & Forgée<br>Galvanisé à chaud | Turnbuckle –extra long<br>Type EE: eye / eye<br>With lock nut;<br>Alloy steel & forged<br>Hot Dip-Galvanised | Spannschraube -extra lang<br>Typ EE:-auge / auge<br>Mit Kontermutter<br>Alloy Stahl & geschmiedet<br>Feuerverzinkt |
|---|---|---|---|

| Nominale maat<br>Désignation<br>Nominal size<br>Nenngrösse | l1<br>mm | l2<br>mm | w<br>mm | h<br>mm | g<br>inch | k<br>mm | WLL<br>[t] | KG | Art.NR<br>Code Art.<br>Stock No.<br>Art.Nr. | € |
|---|---|---|---|---|---|---|---|---|---|---|
| 3/8 x 6” | 180 | 152 | 12 | 22 | 2 1/2 | 137 | 0,54 | 0,5 | 163103806 | |
| 1/2 x 6” | 190 | 152 | 16 | 27 | 3/8 | 147 | 1 | 0,8 | 163101206 | |
| 1/2 x 9” | 266 | 228 | 16 | 27 | 3/8 | 187 | 1 | 0,9 | 163101209 | |
| 1/2 x 12” | 342 | 304 | 16 | 27 | 3/8 | 222 | 1 | 1,1 | 163101212 | |
| 5/8 x 6” | 200 | 152 | 19 | 33 | 1/2 | 161 | 1,59 | 1,3 | 163105806 | |
| 5/8 x 9” | 276 | 228 | 19 | 33 | 1/2 | 201 | 1,59 | 1,5 | 163105809 | |
| 5/8 x 12” | 352 | 304 | 19 | 33 | 1/2 | 236 | 1,59 | 1,7 | 163105812 | |
| 5/8 x 18” | 505 | 457 | 19 | 33 | 1/2 | 316 | 1,59 | 2,2 | 163103406 | |
| 3/4 x 6” | 210 | 152 | 23 | 38 | 5/8 | 173 | 2,36 | 2 | 163103409 | |
| 3/4 x 9” | 287 | 228 | 23 | 38 | 5/8 | 213 | 2,36 | 2,4 | 163103412 | |
| 3/4 x 12” | 362 | 304 | 23 | 38 | 5/8 | 248 | 2,36 | 2,7 | 163103418 | |
| 3/4 x 18” | 515 | 457 | 23 | 38 | 5/8 | 328 | 2,36 | 3,4 | 163107812 | |
| 7/8 x 12” | 372 | 304 | 28 | 44 | 3/4 | 266 | 3,27 | 4 | 163107818 | |
| 7/8 x 18” | 524 | 457 | 28 | 44 | 3/4 | 346 | 3,27 | 4,9 | 163110012 | |
| 1 x 12” | 381 | 304 | 30 | 52 | 7/8 | 286 | 4,54 | 5,6 | 163110018 | |
| 1 x 18” | 533 | 457 | 30 | 52 | 7/8 | 366 | 4,54 | 6,8 | 163111412 | |
| 1 ¼ x 12” | 387 | 304 | 44 | 71 | 1 1/8 | 330 | 6,89 | 9,8 | 163111418 | |
| 1 ¼ x 18” | 540 | 457 | 44 | 71 | 1 1/8 | 380 | 6,89 | 11,6 | 163111424 | |
| 1 ¼ x 24” | 693 | 610 | 44 | 71 | 1 1/8 | 479 | 6,89 | 13,6 | 163111212 | |
| 1 ½ x 12” | 400 | 304 | 52 | 71 | 1 3/8 | 360 | 9,71 | 15,4 | 163111218 | |
| 1 ½ x 18” | 550 | 457 | 52 | 71 | 1 3/8 | 430 | 9,71 | 18 | 163111224 | |
| 1 ½ x 24” | 703 | 610 | 52 | 71 | 1 3/8 | 430 | 9,71 | 19,3 | 163113418 | |
| 1 ¾ x 18” | 570 | 457 | 60 | 86 | 1 3/4 | 440 | 12,7 | 23,6 | 163113424 | |
| 1 ¾ x 24” | 720 | 610 | 60 | 86 | 1 3/4 | 500 | 12,7 | 26,8 | 163120024 | |
| 2 x 24” | 735 | 610 | 64 | 95 | 2 | 540 | 16,78 | 45 | 163121224 | |
| 2 ½ x 24” | 800 | 610 | 73 | 113 | 2 1/2 | 620 | 27,22 | 81 | 163103806 | |
| 3 ¾ x 24 | 800 | 610 | 89 | 106 | 2 3/4 | 610 | 34,02 | 91 | 163101206 | |

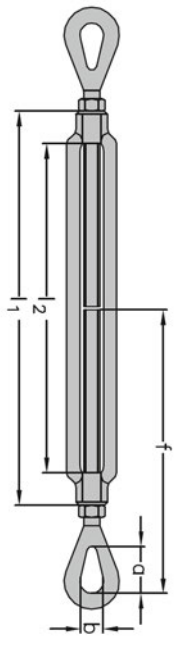


SF 5:1

No Lifting Use - Only static & in line Loads – Marking: Nominal Size, Batch code, L (Left-Hand Thread)

Temp./ WLL Reduction factors : (-20°C ⇔ -10°C=50%) * (-10°C⇔ 0°C=75%) * (0°C ⇔ 100°C=100%) * (100°C ⇔ 150°C=75%) * (150°C ⇔ 200°C:50%)

Subject to minor tolerances

| Spanschroef –extra lang<br>Type HH: haak / haak<br>Met borgmoer;<br>Alloy staal & gesmeed<br>Vuurverzinkt | Tendeur –extra longue<br>Type HH : crochet / crochet<br>Avec contre-écrou;<br>Arcier Allié & Forgée<br>Galvanisé à chaud | Turnbuckle –extra long<br>Type HH: hook / hook<br>With lock-nut<br>Alloy steel & forged -<br>Hot Dip-Galvanised | Spannschraube – extra lang<br>Type HH: haak / haak<br>Mit kontermuttern<br>Alloy Stahl & geschmiedet<br>Feuerverzinkt |
|---|---|---|---|

| Nominale maat<br>Désignation<br>Nominal size<br>Nenngrösse | l1<br>mm | l2<br>mm | m<br>mm | e<br>mm | WLL<br>[t] | KG | Art.NR<br>Code Art.<br>Stock No.<br>Art.Nr. | € |
|---|---|---|---|---|---|---|---|---|
| 3/8 x 6” | 180 | 152 | 12 | 129 | 0,45 | 0.4 | 163203806 | |
| 1/2 x 6” | 190 | 152 | 15 | 147 | 0,68 | 0.7 | 163201206 | |
| 1/2 x 9” | 266 | 228 | 15 | 187 | 0,68 | 0.8 | 163201209 | |
| 1/2 x 12” | 342 | 304 | 15 | 222 | 0,68 | 1.0 | 163201212 | |
| 5/8 x 6” | 200 | 152 | 20 | 166 | 1 | 1.1 | 163205806 | |
| 5/8 x 9” | 276 | 228 | 20 | 206 | 1 | 1.3 | 163205809 | |
| 5/8 x 12” | 352 | 304 | 20 | 241 | 1 | 1.6 | 163205812 | |
| 3/4 x 6” | 210 | 152 | 23 | 181 | 1,36 | 1.8 | 163203406 | |
| 3/4 x 9” | 287 | 228 | 23 | 221 | 1,36 | 2.1 | 163203409 | |
| 3/4 x 12” | 362 | 304 | 23 | 256 | 1,36 | 2.4 | 163203412 | |
| 3/4 x 18” | 515 | 457 | 23 | 336 | 1,36 | 3.1 | 163203418 | |
| 7/8 x 12” | 372 | 304 | 26 | 273 | 1,81 | 3.6 | 163207812 | |
| 7/8 x 18” | 524 | 457 | 26 | 353 | 1,81 | 4.4 | 163207818 | |
| 1 x 12” | 381 | 304 | 29 | 286 | 2,27 | 5.1 | 163210012 | |
| 1 x 18” | 533 | 457 | 29 | 366 | 2,27 | 6.3 | 163210018 | |

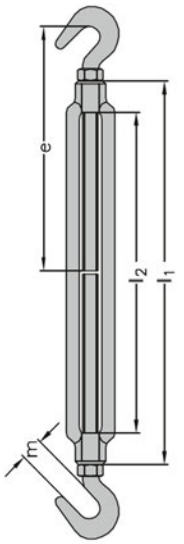


SF 5:1

No Lifting Use - Only static & in line Loads – Marking: Nominal Size, Batch code, L (Left-Hand Thread)
Temp./ WLL Reduction factors : (-20°C ⇔ -10°C=50%) * (-10°C⇔ 0°C=75%) * (0°C ⇔ 100°C=100%) * (100°C ⇔ 150°C=75%) * (150°C ⇔ 200°C:50%)
Subject to minor tolerances

| Spanschroef - extra lang<br>Type EJ: oog / gaffel<br>Met borgmoer;<br>moerbout & splitpen<br>Alloy staal & gesmeed<br>Vuurverzinkt | Tendeur - extra long<br>Type EJ: oeil / chape<br>Avec contre-écrou<br>Ecrou, boulon et goupille fendue<br>Acier allié et forgé<br>Galvanisé à chaud | Turnbuckle - extra long<br>Type EJ: eye / clevis<br>With lock nut<br>Nut, bolt and split pin<br>Alloy steel & forged<br>Hot-dip galvanized | Spannschraube - extra lang<br>Typ EJ-Öse / Gabel<br>Mit Kontermutter<br>Mutter, Bolzen und Splint<br>Alloy Stahl & geschmiedet<br>Feuerverzinkt |
|---|---|---|---|

| Nominale maat<br>Désignation<br>Nominal size<br>Nenngrösse | l1<br>mm | l2<br>mm | a<br>mm | b<br>mm | f<br>mm | w<br>mm | h<br>mm | k<br>mm | g<br>inch | WLL<br>[t] | KG | Art.NR<br>Code Art.<br>Stock No.<br>Art.Nr. | € |
|---|---|---|---|---|---|---|---|---|---|---|---|---|---|
| 3/8 x 6” | 180 | 152 | 28 | 13 | 137 | 12 | 22 | 137 | 5/16 | 0,54 | 0,5 | 163303806 | |
| 1/2 x 6” | 190 | 152 | 36 | 18 | 153 | 16 | 27 | 147 | 3/8 | 1 | 0,8 | 163301206 | |
| 1/2 x 9” | 266 | 228 | 36 | 18 | 193 | 16 | 27 | 187 | 3/8 | 1 | 0,9 | 163301209 | |
| 1/2 x 12” | 342 | 304 | 36 | 18 | 228 | 16 | 27 | 222 | 3/8 | 1 | 1,1 | 163301212 | |
| 5/8 x 6” | 200 | 152 | 44 | 22 | 177 | 19 | 33 | 161 | 1/2 | 1,59 | 1,3 | 163305806 | |
| 5/8 x 9” | 276 | 228 | 44 | 22 | 217 | 19 | 33 | 201 | 1/2 | 1,59 | 1,5 | 163305809 | |
| 5/8 x 12” | 352 | 304 | 44 | 22 | 252 | 19 | 33 | 236 | 1/2 | 1,59 | 1,7 | 163305812 | |
| 3/4 x 6” | 210 | 152 | 54 | 25 | 196 | 23 | 38 | 173 | 5/8 | 2,36 | 2 | 163303406 | |
| 3/4 x 9” | 287 | 228 | 54 | 25 | 236 | 23 | 38 | 213 | 5/8 | 2,36 | 2,4 | 163303409 | |
| 3/4 x 12” | 362 | 304 | 54 | 25 | 271 | 23 | 38 | 248 | 5/8 | 2,36 | 2,7 | 163303412 | |
| 3/4 x 18” | 515 | 457 | 54 | 25 | 351 | 23 | 38 | 328 | 5/8 | 2,36 | 3,4 | 163303418 | |
| 7/8 x 12” | 372 | 304 | 60 | 31 | 287 | 28 | 44 | 266 | 3/4 | 3,27 | 4 | 163307812 | |
| 7/8 x 18” | 524 | 457 | 60 | 31 | 367 | 28 | 44 | 346 | 3/4 | 3,27 | 4,9 | 163307818 | |
| 1 x 12” | 381 | 304 | 76 | 36 | 323 | 30 | 52 | 286 | 7/8 | 4,54 | 5,6 | 163310012 | |
| 1 x 18” | 533 | 457 | 76 | 36 | 403 | 30 | 52 | 366 | 7/8 | 4,54 | 6,8 | 163310018 | |
| 1 ¼ x 12” | 387 | 304 | 90 | 46 | 360 | 44 | 71 | 330 | 1 1/8 | 6,89 | 9,8 | 163311412 | |
| 1 ¼ x 18” | 540 | 457 | 90 | 46 | 440 | 44 | 71 | 380 | 1 1/8 | 6,89 | 11,6 | 163311418 | |
| 1 ¼ x 24” | 693 | 610 | 90 | 46 | 440 | 44 | 71 | 479 | 1 1/8 | 6,89 | 13,6 | 163311424 | |
| 1 ½ x 12” | 400 | 304 | 104 | 54 | 390 | 52 | 71 | 360 | 1 3/8 | 9,71 | 15,4 | 163311212 | |
| 1 ½ x 18” | 550 | 457 | 104 | 54 | 465 | 52 | 71 | 430 | 1 3/8 | 9,71 | 18 | 163311218 | |
| 1 ½ x 24” | 703 | 610 | 104 | 54 | 540 | 52 | 71 | 496 | 1 3/8 | 9,71 | 19,3 | 163311224 | |
| 1 ¾ x 18” | 570 | 457 | 117 | 59 | 475 | 60 | 86 | 440 | 1 3/4 | 12,70 | 22.8 | 163313418 | |
| 1 ¾ x 24” | 720 | 610 | 117 | 59 | 577 | 60 | 86 | 440 | 1 3/4 | 12,70 | 26,8 | 163313424 | |
| 2 x 24” | 735 | 610 | 143 | 67 | 632 | 64 | 95 | 540 | 2 | 16,78 | 45 | 163320024 | |
| 2 ½ x 24” | 800 | 610 | 165 | 79 | 665 | 73 | 113 | 580 | 2 1/2 | 27,22 | 81 | 163321224 | |

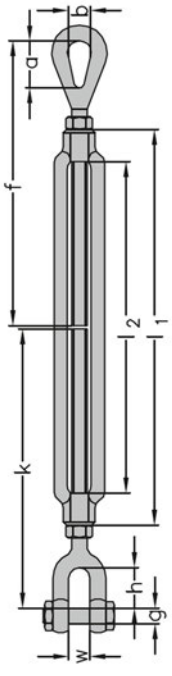


SF 5:1

No Lifting Use - Only static & in line Loads – Marking: Nominal Size, Batch code, L (Left-Hand Thread)
Temp./ WLL Reduction factors : (-20°C ⇔ -10°C=50%) * (-10°C⇔ 0°C=75%) * (0°C ⇔ 100°C=100%) * (100°C ⇔ 150°C=75%) * (150°C ⇔ 200°C:50%)
Subject to minor tolerances

| Spanschroef-extra lang<br>Type HE: haak / oog<br>Met borgmoer<br>Gelegeerd staal & gesmeed<br>Thermisch verzinkt | Tendeur –extra longue<br>Type HE: crochet / oeil<br>Avec ecrou de serrage<br>Acier allié et forgé<br>Galvanisé à chaud | Turnbuckle –extra long<br>Type HE: hook / eye<br>With lock-nut<br>Alloy steel & forged<br>Hot-dip galvanized | Spannschraube – extra lang<br>Type HE: auge / haak<br>Mit kontermuttern<br>Alloy Stahl & geschmiedet<br>Feuerverzinkt |
|---|---|---|---|

| Nominale maat<br>Désignation<br>Nominal size<br>Nenngrösse | l1<br>mm | l2<br>mm | a<br>mm | b<br>mm | f<br>mm | m<br>mm | e<br>mm | WLL<br>[t] | KG | Art.NR<br>Code Art.<br>Stock No.<br>Art.Nr. | € |
|---|---|---|---|---|---|---|---|---|---|---|---|
| 3/8 x 6” | 180 | 152 | 28 | 13 | 137 | 12 | 129 | 0,45 | 0.4 | 163003806 | |
| 1/2 x 6” | 190 | 152 | 36 | 18 | 153 | 15 | 147 | 0,68 | 0.7 | 163001206 | |
| 1/2 x 9” | 266 | 228 | 36 | 18 | 193 | 15 | 187 | 0,68 | 0.8 | 163001209 | |
| 1/2 x 12” | 342 | 304 | 36 | 18 | 228 | 15 | 222 | 0,68 | 1.0 | 163001212 | |
| 5/8 x 6” | 200 | 152 | 44 | 22 | 177 | 20 | 166 | 1 | 1.0 | 163005806 | |
| 5/8 x 9” | 276 | 228 | 44 | 22 | 217 | 20 | 206 | 1 | 1.3 | 163005809 | |
| 5/8 x 12” | 352 | 304 | 44 | 22 | 252 | 20 | 241 | 1 | 1.6 | 163005812 | |
| 3/4 x 6” | 210 | 152 | 54 | 25 | 196 | 23 | 181 | 1,36 | 1.8 | 163003406 | |
| 3/4 x 9” | 287 | 228 | 54 | 25 | 236 | 23 | 221 | 1,36 | 2.1 | 163003409 | |
| 3/4 x 12” | 362 | 304 | 54 | 25 | 271 | 23 | 256 | 1,36 | 2.4 | 163003412 | |
| 3/4 x 18” | 515 | 457 | 54 | 25 | 351 | 23 | 336 | 1,36 | 3.1 | 163003418 | |
| 7/8 x 12” | 372 | 304 | 60 | 31 | 287 | 26 | 273 | 1,81 | 3.6 | 163007812 | |
| 7/8 x 18” | 524 | 457 | 60 | 31 | 367 | 26 | 353 | 1,81 | 4.4 | 163007818 | |
| 1 x 12” | 381 | 304 | 76 | 36 | 323 | 29 | 286 | 2,27 | 5.1 | 163010012 | |
| 1 x 18” | 533 | 457 | 76 | 36 | 403 | 29 | 3.66 | 2,27 | 6.3 | 163010018 | |

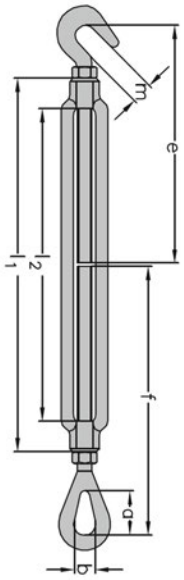


SF 5:1

No Lifting Use - Only static & in line Loads – Marking: Nominal Size, Batch code, L (Left-Hand Thread)

Temp./ WLL Reduction factors : (-20°C ⇔ -10°C=50%) * (-10°C⇔ 0°C=75%) * (0°C ⇔ 100°C=100%) * (100°C ⇔ 150°C=75%) * (150°C ⇔ 200°C:50%)

Subject to minor tolerances




www.DECORLUX.be
HIJSTECHNIEK
TECHNIQUE LEVAGE
HEBETECHNIK
LIFTING TECHNICS

# HEF & HIJSMIDDELEN
# HOISTING EQUIPEMENT

| Technische wijzigingen voorbehouden | Sous réserve de modifications techniques | Subject to technical modifications | Technische Änderungen vorbehalten |

# Inhoudsopgave / Table of contents




Premium Elektrische Kettingtakel DEH
Premium Electric Chain Hoist DEH

Afstandsbediening DEH
Remote Control DEH





Elektrische Kettingtakel DTS
Electric Chain Hoist DTS

Afstandsbediening DTS
Remote Control DTS





Elektrische Kettingtakel DMS
Electric Chain Hoist DMS

Elektrische Kettingtakel US
Electric Chain Hoist US





Afstandsbediening US
Remote Control US

Batterij Kettingtakel
Battery Chain Hoist





Pneumatische Kettingtakel
Pneumatic Chain Hoist

# Elektrische Kettingtakels / Electric Chain Hoists

## Premium Elektrische Kettingtakel DEH / Premium Electric Chain Hoist DEH







### Eigenschappen

- Robuuste constructie.
- Geschikt voor een breed scala aan industriële toepassingen.
- Wartel lasthaak met veiligheidsklep.
- Eenvoudig te demonteren voor onderhoudsdoeleinden.
- Met SIEMENS / EATON besturingssysteem.
- Permanent gesmeerde transmissie, zorgt voor een soepele en stille werking.
- Geleverd met bedieningsschakelaar, voedingskabel en kettingbak.
- Voldoet aan de Machinerichtlijn 2006/42/EG. Geleverd met testcertificaat, CE-conformiteitsverklaring en gebruiksaanwijzing.

### Features

- Robust housing.
- Suitable for a wide range of industrial applications.
- Swivel load hook with safety latch.
- Easy to disassemble for maintenance purposes.
- Control system with SIEMENS / EATON relais.
- Permanently lubricated transmission, ensures smooth and quiet operation.
- Supplied with control switch, power cable and chain container.
- Complies with the Machinery Directive 2006/42/EC. Supplied with test certificate, CE declaration of conformity and operating instructions.

| Specificaties / Specifications | | | | | | | |
|---|---|---|---|---|---|---|---|
| Artikelnummer | Capaciteit | Hijssnelheid | Hijsketting | Parten | Energieverbruik | Netto gewicht | Extra gewicht |
| Article code | Capacity | Lifting speed | Load chain | Chain falls | Power output | Net weight | Extra weight |
| | ton | m/min | Øxmm | | kW | kg | kg/m |
| DH.0.DEH.001253 | 0.125 | 8/2 | 4 x 12 | 1 | 0.4/0.1 | 22 | 0.4 |
| DH.0.DEH.002503 | 0.25 | 8/2 | 4 x 12 | 1 | 0.4/0.1 | 22 | 0.4 |
| DH.0.DEH.00503 | 0.5 | 8/2 | 5 x 15 | 1 | 0.72/0.18 | 33 | 0.7 |
| DH.0.DEH.01003 | 1 | 8/2 | 7.1 x 21 | 1 | 1.6/0.4 | 56 | 1.1 |
| DH.0.DEH.02003 | 2 | 4/1 | 7.1 x 21 | 2 | 1.6/0.4 | 58 | 2.2 |

| Specificaties / Specifications | | |
|---|---|---|
| Voltage / Operating voltage | 400-440V / 50Hz / 3Ph | (met elektrische loopkat alleen 400V / with electric trolley only 400V) |
| Hijssnelheid / Lifting speed | Dubbele snelheid / Double speed | |
| Hijsketting / Load chain | Lastketting volgens EN 818-7-DAT/DT / Load chain according to EN 818-7-DAT/DT | |
| Stuurkabel / Control cable | Standaard ≈6 meter / Standard ≈6 meter | |
| Stroomkabel / Power cable | ≈4.5 meter zonder stekker / ≈4.5 meter without plug | |
| Behuizing bescherming / Housing protection | IP 55 | |
| Besturing bescherming / Control protection | IP 65 | |
| Classificatie / Classification | M5/2m (ISO/FEM) | |
| Inschakelduur / Starts per uur / Duty cycle / Starts per hour | 40% / 240 | |
| Isolatieklasse / Insulation class | F | |
| Bedrijfstemperatuur / Operating temperature | -10°C - +40°C | |
| Ladingtype / Load type | Alleen voor goederen, niet geschikt om personen te hijsen / Goods, may not be used to lift people | |

| Beveiliging / Protection | |
|---|---|
| Schakelaar / Control switch | 24V schakelaar met noodstop / 24V pendant control switch with emergency stop button |
| Overlastbeveiliging / Overload protection | Extern instelbare slipkoppeling / Externally adjustable slip clutch |
| Rem / Brake | Elektromagnetische veerdrukrem, houdt de lading ook bij stroomuitval stevig vast / Electromagnetic spring pressure brake, holds the load in the event of power failure |
| Eindschakelaar / Limit switch | Electro-mechanische hoogste en laagste eindschakelaar / Electro-mechanical upper and lower limit switch |
| Thermische bescherming / Thermal protection | Beschermd door warmtesensor / Protected through heat sensor |

# Premium Elektrische Kettingtakel DEH / Premium Electric Chain Hoist DEH




DH.0.DET.LLS






optioneel
optional

DH.0.DED






optioneel
optional

DH.0.DEY

## Eigenschappen

- Elektrische kettingtakel gemonteerd op een (elektrische) loopkat met een lage bouwhoogte.
- Gebalanceerde steunwielen maken het mogelijk om soepel over de balk te bewegen.
- Afbreukbeveiligingsbeugels dienen als val-, breek- en stootbeveiliging. Bovendien uitgerust met kantelbeveiliging.
- Permanent gesmeerde, kogel gelagerde wielen zorgen voor een soepele verplaatsing.
- Geschikt voor de meeste I- en H-balken.

## Features

- Electric chain hoist mounted on low headroom (electric) trolley. Balance
- support wheels enable smooth travelling along the beam.
- Safety bars serve as fall-, breaking- and impact protection. Additionally equipped with tilting protection.
- Permanently lubricated, ball bearing mounted wheels allow for smooth traversing.
- Suitable for most I- and H-beam profiles.

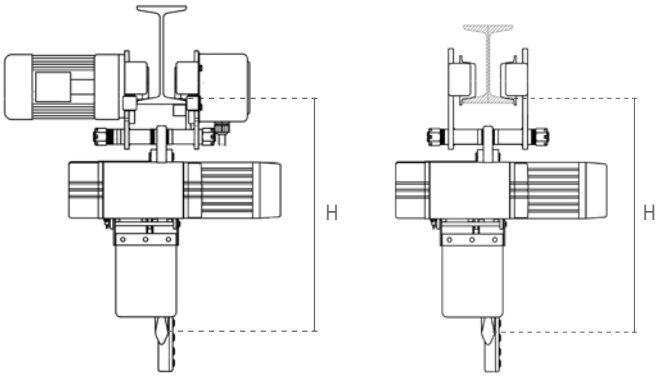


| Specificaties / Specifications | | | | | | |
|---|---|---|---|---|---|---|
| Artikelnummer | Capaciteit | Rijsnelheid | Energieverbruik loopkat | Balkbreedte | Netto gewicht | Min. hoogte (H) |
| Article code | Capacity | Traversing speed | Power output trolley | Beam width | Net weight | Min. height (H) |
| | ton | m/min | kW | mm | kg | mm |
| DH.0.DED.001253 | 0.125 | 20/6.7 | 0.2/0.07 | 74-300 | 55 | 438 |
| DH.0.DED.002503 | 0.25 | 20/6.7 | 0.2/0.07 | 74-300 | 55 | 438 |
| DH.0.DED.00503 | 0.5 | 20/6.7 | 0.2/0.07 | 74-300 | 66 | 480 |
| DH.0.DED.01003 | 1 | 20/6.7 | 0.2/0.07 | 74-300 | 89 | 578 |
| DH.0.DED.02003 | 2 | 20/6.7 | 0.4/0.13 | 74-300 | 98 | 670 |

| Specificaties / Specifications | | | | |
|---|---|---|---|---|
| Artikelnummer | Capaciteit | Balkbreedte | Netto gewicht | Min. hoogte (H) |
| Article code | Capacity | Beam width | Net weight | Min. height (H) |
| | ton | mm | kg | mm |
| DH.0.DEY.001253 | 0.125 | 74-300 | 29 | 438 |
| DH.0.DEY.002503 | 0.25 | 74-300 | 29 | 438 |
| DH.0.DEY.00503 | 0.5 | 74-300 | 40 | 480 |
| DH.0.DEY.01003 | 1 | 74-300 | 63 | 578 |
| DH.0.DEY.02003 | 2 | 74-300 | 70 | 670 |

# Premium Elektrische Kettingtakel DEH / Premium Electric Chain Hoist DEH

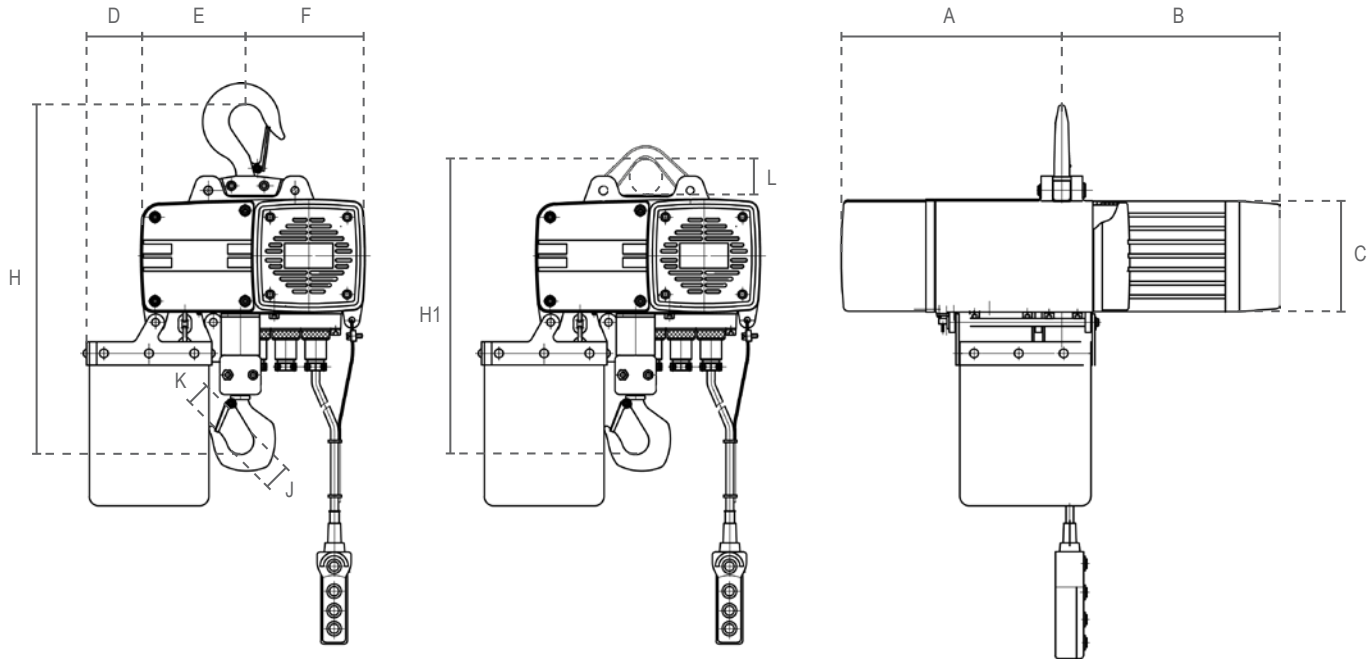


| Afmetingen / Dimensions | | | | | | | | | | | |
|---|---|---|---|---|---|---|---|---|---|---|---|
| Artikelnummer / Article code | A | B | C | D | E | F | H | H1 | J | K | L |
| DH.0.DEH.001253 | 211 | 228 | 115 | 57 | 114 | 123 | 420 | 373 | 40 | 23 | 53 |
| DH.0.DEH.002503 | 211 | 228 | 115 | 57 | 114 | 123 | 420 | 373 | 40 | 23 | 53 |
| DH.0.DEH.00503 | 231 | 204 | 165 | 62 | 118 | 162 | 465 | 420 | 40 | 27 | 58 |
| DH.0.DEH.01003 | 264 | 245 | 175 | 67 | 128 | 187 | 575 | 520 | 45 | 31 | 61 |
| DH.0.DEH.02003 | 264 | 245 | 175 | 89 | 150 | 165 | 690 | 595 | 53 | 38 | 61 |

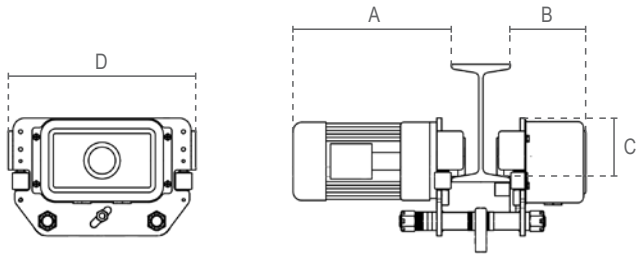


DH.0.DET

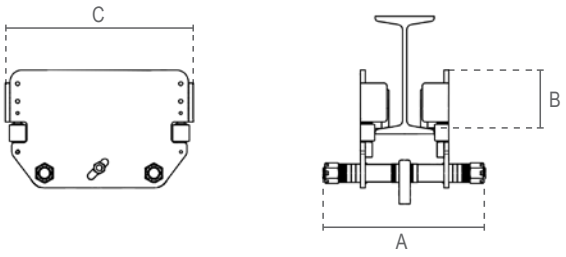


DH.0.026

| Specificaties / Specifications | | | | | Afmetingen / Dimensions | | | |
|---|---|---|---|---|---|---|---|---|
| Artikelnummer / Article code | Capaciteit / Capacity | Min. radius / Min. radius | Wiel diameter / Wheel diameter | Netto gewicht / Net weight | A | B | C | D |
| | ton | m | mm | kg | | | | |
| DF.0.DET.01252 | 0.125 | 2.5 | 68 | 33 | 336 | 131 | 97 | 320 |
| DF.0.DET.0252 | 0.25 | 2.5 | 68 | 33 | 336 | 131 | 97 | 320 |
| DF.0.DET.0502 | 0.5 | 2.5 | 68 | 33 | 336 | 131 | 97 | 320 |
| DF.0.DET.1002 | 1 | 2.5 | 68 | 33 | 336 | 131 | 97 | 340 |
| DF.0.DET.2002 | 2 | 2.5 | 75 | 40 | 338 | 132 | 113 | 340 |

| Specificaties / Specifications | | | | | Afmetingen / Dimensions | | |
|---|---|---|---|---|---|---|---|
| Artikelnummer / Article code | Capaciteit / Capacity | Min. radius / Min. radius | Wiel diameter / Wheel diameter | Netto gewicht / Net weight | A | B | C |
| | ton | m | mm | kg | | | |
| DF.0.02600125 | 0.125 | 2.5 | 68 | 7 | 424 | 75 | 270 |
| DF.0.02600250 | 0.25 | 2.5 | 68 | 7 | 424 | 75 | 270 |
| DF.0.02600500 | 0.5 | 2.5 | 68 | 7 | 424 | 75 | 270 |
| DF.0.02601000 | 1 | 2.5 | 68 | 7 | 424 | 75 | 270 |
| DF.0.02602000 | 2 | 2.5 | 75 | 12 | 424 | 75 | 270 |

# Afstandsbediening / Remote Control




DH.RC.0402

geschikt voor / suitable for



DH.RC.C.2.0202

## Eigenschappen

- Alleen geschikt voor de DELTA® kettingtakel model DEH.
- Kan achteraf worden gemonteerd en afwisselend worden gebruikt met de stuurkabel.
- Lichte, maar robuuste zender uitgerust met noodstop.
- Afmetingen zender (LxBxH): 205 x 60 x 53
- Afmetingen ontvanger (LxBxH): 205 x 86 x 130
- Voldoet aan de Machinerichtlijn 2006/42/EG.

## Features

- Only suitable for the DELTA® chain hoist model DEH.
- Can be retrofitted and used alternately with the control cable through plug&play connection.
- Light, yet robust transmitter equipped with emergency stop button.
- Dimensions transmitter (LxWxH): 205 x 60 x 53
- Dimensions receiver (LxWxH): 205 x 86 x 130
- Complies with the Machinery Directive 2006/42/EC.



Eenvoudige plug&play-aansluiting /Easy plug&play connection

| Specificaties / Specifications | | |
|---|---|---|
| | Zender<br>Transmitter | Ontvanger<br>Receiving Unit |
| Besturing bescherming / Control protection | IP 65 | |
| Operatiebereik vrije ruimte / Operation distance in open space | 100 m | |
| Bedrijfstemperatuur / Operating temperature | -10°C - +40°C | |
| Netto gewicht / Net weight | 0.3 kg | 0.4 kg |
| Stroomvoorziening / Power supply | 3V (2x AA) | 18V - 65V |

| Specificaties / Specifications | | | |
|---|---|---|---|
| Artikelnummer<br>Article code | Aantal takels<br>Number of hoists | Functies<br>Functions | Hijssnelheid type<br>Lifting speed type |
| DH.RC.0202 | 1 | 2 | 2 |
| DH.RC.0402 | 1 | 4 | 2 |
| | | | |
| DH.RC.C.2.0202 | 2 | 2 | 2 |
| DH.RC.C.2.0402 | 2 | 4 | 2 |
| DH.RC.C.4.0202 | 4 | 2 | 2 |
| DH.RC.C.4.0402 | 4 | 4 | 2 |

| | |
|---|---|
| 2 = twee knoppen / two uttons ↕ | 1 = enkele snelheid / single speed |
| 4 = vier knoppen / four buttons ↕↔ | 2 = dubbele snelheid / double speed |

# Elektrische Kettingtakel SG.DTS / Electric Chain Hoist SG.DTS

## Eigenschappen

- Robuuste aluminium behuizing.
- Geschikt voor een breed scala aan industriële toepassingen.
- Wartel lasthaak met veiligheidsklep.
- Eenvoudig te demonteren voor onderhoudsdoeleinden.
- Met SIEMENS besturingssysteem.
- Permanent gesmeerde transmissie, zorgt voor een soepele en stille werking.
- Geleverd met bedieningsschakelaar, voedingskabel en kettingbak.
- Voldoet aan de Machinerichtlijn 2006/42/EG. Geleverd met testcertificaat, CE-conformiteitsverklaring en gebruiksaanwijzing.

## Features

- Robust aluminium housing.
- Suitable for a wide range of industrial applications.
- Swivel load hook with safety latch.
- Easy to disassemble for maintenance purposes.
- Control system with SIEMENS relais.
- Permanently lubricated transmission, ensures smooth and quiet operation.
- Supplied with control switch, power cable and chain container.
- Complies with the Machinery Directive 2006/42/EC. Supplied with test certificate, CE declaration of conformity and operating instructions.




optioneel
optional

SG.0.DTS

| Specificaties / Specifications | | | | | | | |
|---|---|---|---|---|---|---|---|
| Artikelnummer | Capaciteit | Hijssnelheid | Hijsketting | Parten | Energieverbruik | Netto gewicht | Extra gewicht |
| Article code | Capacity | Lifting speed | Load chain | Chain falls | Power output | Net weight | Extra weight |
| | ton | m/min | Øxmm | | kW | kg | kg/m |
| SG.0.DTS.00251 | 0.25 | 7 | 5 x 15 | 1 | 0.45 | 42 | 0.7 |
| SG.0.DTS.00252 | 0.25 | 7/2.3 | 5 x 15 | 1 | 0.45/0.15 | 50 | 0.7 |
| SG.0.DTS.00501 | 0.5 | 7.6 | 6.3 x 19 | 1 | 0.9 | 43 | 0.9 |
| SG.0.DTS.00502 | 0.5 | 7.6/2.5 | 6.3 x 19 | 1 | 0.9/0.3 | 51 | 0.9 |
| SG.0.DTS.01001 | 1 | 5 | 8 x 24 | 1 | 1.1 | 45 | 1.5 |
| SG.0.DTS.01002 | 1 | 5/1.7 | 8 x 24 | 1 | 1.1/0.37 | 57 | 1.5 |
| SG.0.DTS.02201 | 2 | 2.5 | 8 x 24 | 2 | 1.1 | 51 | 3 |
| SG.0.DTS.02202 | 2 | 2.5/0.85 | 8 x 24 | 2 | 1.1/0.37 | 64 | 3 |
| SG.0.DTS.02101 | 2 | 5.3 | 10 x 30.2 | 1 | 3 | 94 | 2.2 |
| SG.0.DTS.02102 | 2 | 5.3/1.8 | 10 x 30.2 | 1 | 3/1 | 116 | 2.2 |
| SG.0.DTS.03001 | 3 | 6 | 11.2 x 34 | 1 | 3 | 94 | 2.7 |
| SG.0.DTS.03002 | 3 | 6/2 | 11.2 x 34 | 1 | 3/1 | 116 | 2.7 |
| SG.0.DTS.05001 | 5 | 3 | 11.2 x 34 | 2 | 3 | 108 | 5.4 |
| SG.0.DTS.05002 | 5 | 3/1 | 11.2 x 34 | 2 | 3/1 | 130 | 5.4 |
| SG.0.DTS.07501 | 7.5 | 2 | 11.2 x 34 | 3 | 3 | 159 | 8.1 |
| SG.0.DTS.07502 | 7.5 | 2/0.6 | 11.2 x 34 | 3 | 3/1 | 184 | 8.1 |
| SG.0.DTS.10001 | 10 | 3 | 11.2 x 34 | 4 | 2x3 | 219 | 10.8 |
| SG.0.DTS.10002 | 10 | 3/1 | 11.2 x 34 | 4 | 2x3/1 | 263 | 10.8 |
| SG.0.DTS.15001 | 15 | 2 | 11.2 x 34 | 6 | 2x3 | 262 | 16.2 |
| SG.0.DTS.15002 | 15 | 2/0.6 | 11.2 x 34 | 6 | 2x3/1 | 335 | 16.2 |

| Specificaties / Specifications | | |
|---|---|---|
| Voltage / Operating voltage | 400-440V / 50Hz / 3Ph | (met elektrische loopkat alleen 400V / with electric trolley only 400V) |
| Hijssnelheid / Lifting speed | Enkele of dubbele snelheid / Single or double speed | |
| Hijsketting / Load chain | Lastketting volgens EN 818-7-DAT/DT / Load chain according to EN 818-7-DAT/DT | |
| Stuurkabel / Control cable | Standaard ≈6 meter / Standard ≈6 meter | |
| Stroomkabel / Power cable | ≈1 meter zonder stekker / ≈1 meter without plug | |
| Behuizing bescherming / Housing protection | IP 55 | |
| Besturing bescherming / Control protection | IP 65 | |
| Classificatie / Classification | M5/2m (ISO/FEM) | |
| Inschakelduur / Starts per uur / Duty cycle / Starts per hour | 40% / 240 | |
| Isolatieklasse / Insulation class | F | |
| Bedrijfstemperatuur / Operating temperature | -10°C - +40°C | |
| Ladingtype / Load type | Alleen voor goederen, niet geschikt om personen te hijsen / Goods, may not be used to lift people | |

# Elektrische Kettingtakel SG.DTS / Electric Chain Hoist SG.DTS

| Beveiliging / Protection | |
|---|---|
| Schakelaar / Control switch | 24V schakelaar met noodstop / 24V pendant control switch with emergency stop button |
| Overlastbeveiliging / Overload protection | Extern instelbare slipkoppeling / Externally adjustable slip clutch |
| Rem / Brake | Elektromagnetische veerdrukrem, houdt de lading ook bij stroomuitval stevig vast / Electromagnetic spring pressure brake, holds the load in the event of power failure |
| Eindschakelaar / Limit switch | Electro-mechanische hoogste en laagste eindschakelaar / Electro-mechanical upper and lower limit switch |
| Thermische bescherming / Thermal protection | Beschermd door warmtesensor / Protected through heat sensor |

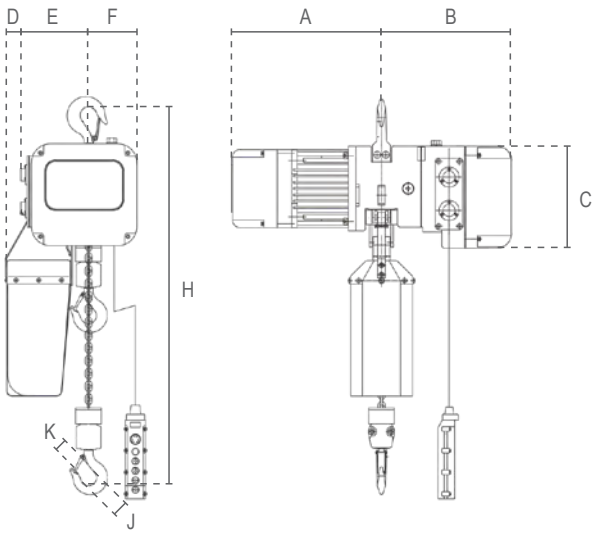


0.25 - 7.5 ton

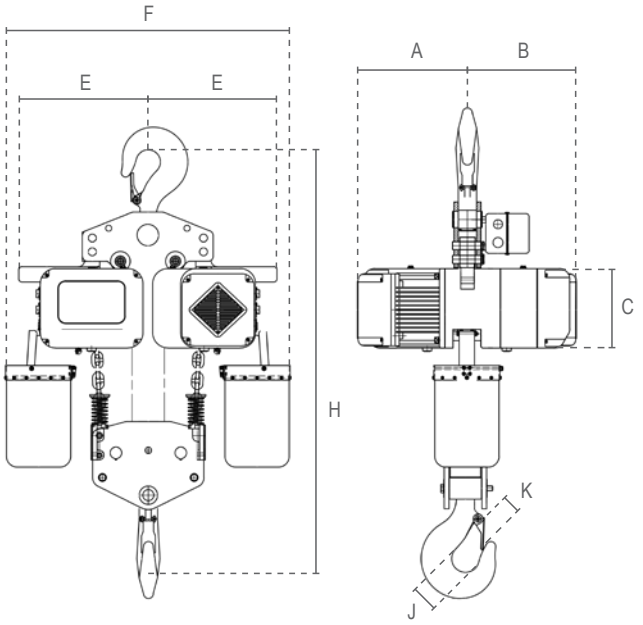


10 - 15 ton

SG.0.DXX.XXXX1 = enkele snelheid / single speed
SG.0.DXX.XXXX2 = dubbele snelheid / double speed

| Afmetingen / Dimensions | | | | | | | | | |
|---|---|---|---|---|---|---|---|---|---|
| Artikelnummer / Article code | A | B | C | D | E | F | H | J | K |
| SG.0.DTS.00251 | 282 | 307 | 214 | 80 | 142 | 102 | 460 | 40 | 25 |
| SG.0.DTS.00252 | 307 | 307 | 214 | 80 | 142 | 102 | 460 | 40 | 25 |
| SG.0.DTS.00501 | 302 | 307 | 214 | 80 | 142 | 102 | 470 | 40 | 25 |
| SG.0.DTS.00502 | 334 | 307 | 214 | 80 | 142 | 102 | 470 | 40 | 25 |
| SG.0.DTS.01001 | 302 | 307 | 214 | 80 | 142 | 102 | 520 | 45 | 31 |
| SG.0.DTS.01002 | 354 | 307 | 214 | 80 | 142 | 102 | 520 | 45 | 31 |
| SG.0.DTS.02201 | 302 | 307 | 214 | 80 | 185 | 59 | 760 | 53 | 38 |
| SG.0.DTS.02202 | 354 | 307 | 214 | 80 | 185 | 59 | 760 | 53 | 38 |
| SG.0.DTS.02101 | 358 | 336 | 260 | 80 | 185 | 165 | 695 | 53 | 38 |
| SG.0.DTS.02102 | 481 | 336 | 260 | 80 | 185 | 165 | 695 | 53 | 38 |
| SG.0.DTS.03001 | 358 | 336 | 260 | 80 | 185 | 165 | 695 | 53 | 38 |
| SG.0.DTS.03002 | 481 | 336 | 260 | 80 | 185 | 165 | 695 | 53 | 38 |
| SG.0.DTS.05001 | 358 | 336 | 260 | 80 | 240 | 110 | 910 | 75 | 52 |
| SG.0.DTS.05002 | 481 | 336 | 260 | 80 | 240 | 110 | 910 | 75 | 52 |
| SG.0.DTS.07501 | 358 | 336 | 260 | 80 | 240 | 110 | 910 | 75 | 55 |
| SG.0.DTS.07502 | 481 | 336 | 260 | 80 | 240 | 110 | 910 | 75 | 55 |
| SG.0.DTS.10001 | 358 | 336 | 260 | - | 370 | 950 | 1300 | 80 | 60 |
| SG.0.DTS.10002 | 481 | 336 | 260 | - | 370 | 950 | 1300 | 80 | 60 |
| SG.0.DTS.15001 | 358 | 336 | 260 | - | 370 | 950 | 1250 | 112 | 102 |
| SG.0.DTS.15002 | 481 | 336 | 260 | - | 370 | 950 | 1250 | 112 | 102 |

# Elektrische Kettingtakel SG.DTS / Electric Chain Hoist SG.DTS

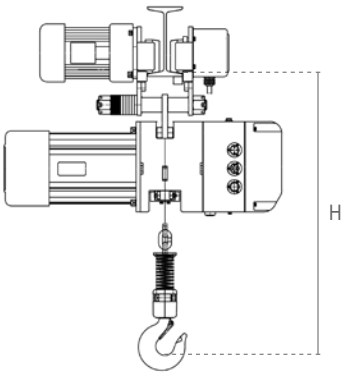





optioneel
optional

SG.0.DTD

## Eigenschappen

- Elektrische kettingtakel gemonteerd op een (elektrische) loopkat met een lage bouwhoogte.
- Gebalanceerde steunwielen maken het mogelijk om soepel over de balk te bewegen.
- Afbreukbeveiligingsbeugels dienen als val-, breek- en stootbeveiliging. Bovendien uitgerust met kantelbeveiliging.
- Permanent gesmeerde, kogel gelagerde wielen zorgen voor een soepele verplaatsing.
- Geschikt voor de meeste I- en H-balken.

## Features

- Electric chain hoist mounted on low headroom (electric) trolley.
- Balance support wheels enable smooth travelling along the beam.
- Safety bars serve as fall-, breaking- and impact protection. Additionally equipped with tilting protection.
- Permanently lubricated, ball bearing mounted wheels allow for smooth traversing.
- Suitable for most I- and H-beam profiles.

| Specificaties / Specifications | | | | | | |
|---|---|---|---|---|---|---|
| Artikelnummer | Capaciteit | Rijsnelheid | Energieverbruik loopkat | Balkbreedte | Netto gewicht | Min. hoogte (H) |
| Article code | Capacity | Traversing speed | Power output trolley | Beam width | Net weight | Min. height (H) |
| | ton | m/min | kW | mm | kg | mm |
| SG.0.DTD.00251 | 0.25 | 13.5 | 0.2 | 74-300 | 66 | 480 |
| SG.0.DTD.00252 | 0.25 | 20/6.7 | 0.2/0.07 | 74-300 | 81 | 480 |
| SG.0.DTD.00501 | 0.5 | 13.5 | 0.2 | 74-300 | 69 | 480 |
| SG.0.DTD.00502 | 0.5 | 20/6.7 | 0.2/0.07 | 74-300 | 84 | 480 |
| SG.0.DTD.01001 | 1 | 13.5 | 0.2 | 74-300 | 71 | 510 |
| SG.0.DTD.01002 | 1 | 20/6.7 | 0.2/0.07 | 74-300 | 90 | 510 |
| SG.0.DTD.02201 | 2 | 13.5 | 0.4 | 74-300 | 87 | 695 |
| SG.0.DTD.02202 | 2 | 20/6.7 | 0.4/0.13 | 74-300 | 104 | 695 |
| SG.0.DTD.02101 | 2 | 13.5 | 0.4 | 74-300 | 146 | 665 |
| SG.0.DTD.02102 | 2 | 20/6.7 | 0.4/0.13 | 74-300 | 172 | 665 |
| SG.0.DTD.03001 | 3 | 13.5 | 0.4 | 88-300 | 146 | 665 |
| SG.0.DTD.03002 | 3 | 18/6 | 0.4/0.13 | 88-300 | 172 | 665 |
| SG.0.DTD.05001 | 5 | 13.5 | 0.75 | 88-300 | 176 | 885 |
| SG.0.DTD.05002 | 5 | 18/6 | 0.75/0.25 | 88-300 | 206 | 885 |
| SG.0.DTD.07501 | 7.5 | 11 | 0.75 | 150-220 | 231 | 1035 |
| SG.0.DTD.07502 | 7.5 | 11/3.5 | 0.75 | 150-220 | 256 | 1035 |
| SG.0.DTD.10001 | 10 | 11 | 0.75 | 150-220 | 341 | 1100 |
| SG.0.DTD.10002 | 10 | 11/3.5 | 0.75 | 150-220 | 385 | 1100 |
| SG.0.DTD.15001 | 15 | 11 | 2x0.75 | 150-220 | 400 | 1250 |
| SG.0.DTD.15002 | 15 | 11/3.5 | 2x0.75 | 150-220 | 473 | 1250 |

# Elektrische Kettingtakel SG.DTS / Electric Chain Hoist SG.DTS

| Specificaties / Specifications | | | | |
|---|---|---|---|---|
| Artikelnummer | Capaciteit | Balkbreedte | Netto gewicht | Min. hoogte (H) |
| Article code | Capacity | Beam width | Net weight | Min. height (H) |
| | ton | mm | kg | mm |
| SG.0.DTY.00251 | 0.25 | 74-300 | 64 | 480 |
| SG.0.DTY.00252 | 0.25 | 74-300 | 72 | 480 |
| SG.0.DTY.00501 | 0.5 | 74-300 | 65 | 480 |
| SG.0.DTY.00502 | 0.5 | 74-300 | 73 | 480 |
| SG.0.DTY.01001 | 1 | 74-300 | 67 | 510 |
| SG.0.DTY.01002 | 1 | 74-300 | 79 | 510 |
| SG.0.DTY.02201 | 2 | 74-300 | 73 | 695 |
| SG.0.DTY.02202 | 2 | 74-300 | 86 | 695 |
| SG.0.DTY.02101 | 2 | 88-300 | 136 | 665 |
| SG.0.DTY.02102 | 2 | 88-300 | 158 | 665 |
| SG.0.DTY.03001 | 3 | 88-300 | 136 | 665 |
| SG.0.DTY.03002 | 3 | 88-300 | 158 | 665 |
| SG.0.DTY.05001 | 5 | 88-300 | 152 | 885 |
| SG.0.DTY.05002 | 5 | 88-300 | 174 | 885 |

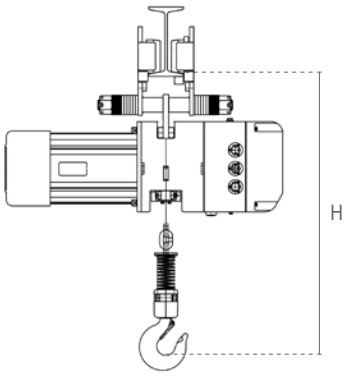


SG.0.DTY

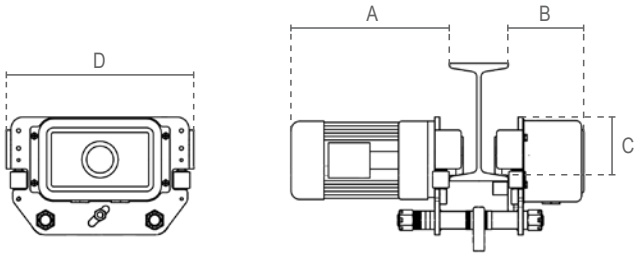


SG.0.DHM

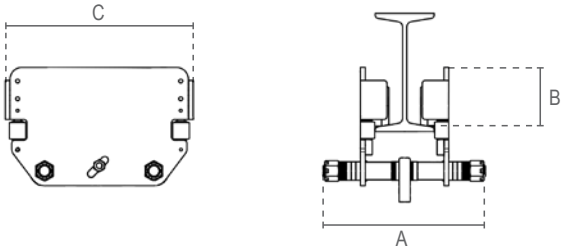


SG.0.026

SG.0.DXX.XXXX1 = enkele snelheid / single speed
SG.0.DXX.XXXX2 = dubbele snelheid / double speed

| Specificaties / Specifications | | | | | Afmetingen / Dimensions | | | |
|---|---|---|---|---|---|---|---|---|
| Artikelnummer | Capaciteit | Min. radius | Wiel diameter | Netto gewicht | | | | |
| Article code | Capacity | Min. radius | Wheel diameter | Net weight | A | B | C | D |
| | ton | m | mm | kg | | | | |
| SG.0.DHM.00251 | 0.25 | 2.5 | 68 | 24 | 296 | 130 | 97 | 340 |
| SG.0.DHM.00252 | 0.25 | 2.5 | 68 | 31 | 336 | 130 | 97 | 340 |
| SG.0.DHM.00501 | 0.5 | 2.5 | 68 | 26 | 296 | 130 | 97 | 340 |
| SG.0.DHM.00502 | 0.5 | 2.5 | 68 | 33 | 336 | 130 | 97 | 340 |
| SG.0.DHM.01001 | 1 | 2.5 | 68 | 26 | 296 | 130 | 97 | 340 |
| SG.0.DHM.01002 | 1 | 2.5 | 68 | 33 | 336 | 130 | 97 | 340 |
| SG.0.DHM.02201 | 2 | 2.5 | 75 | 36 | 323 | 132 | 113 | 340 |
| SG.0.DHM.02202 | 2 | 2.5 | 75 | 40 | 338 | 132 | 113 | 340 |
| SG.0.DHM.02101 | 2 | 5 | 96 | 52 | 325 | 135 | 133 | 370 |
| SG.0.DHM.02102 | 2 | 5 | 96 | 56 | 340 | 135 | 133 | 370 |
| SG.0.DHM.03001 | 3 | 5 | 96 | 52 | 325 | 135 | 133 | 370 |
| SG.0.DHM.03002 | 3 | 5 | 96 | 56 | 340 | 135 | 133 | 370 |
| SG.0.DHM.05001 | 5 | 5 | 110 | 68 | 360 | 135 | 140 | 410 |
| SG.0.DHM.05002 | 5 | 5 | 110 | 76 | 410 | 135 | 140 | 410 |
| SG.0.DHM.07501 | 7.5 | 2 | 140 | 72 | 260 | 170 | 150 | 400 |
| SG.0.DHM.10001 | 10 | 3 | 175 | 122 | 260 | 170 | 175 | 500 |
| SG.0.DHM.15001 | 15 | 5 | 140 | 138 | 260 | 170 | 150 | 900 |

| Specificaties / Specifications | | | | | Afmetingen / Dimensions | | |
|---|---|---|---|---|---|---|---|
| Artikelnummer | Capaciteit | Min. radius | Wiel diameter | Netto gewicht | | | |
| Article code | Capacity | Min. radius | Wheel diameter | Net weight | A | B | C |
| | ton | m | mm | kg | | | |
| SG.0.02600250 | 0.25 | 2.5 | 68 | 22 | 424 | 75 | 270 |
| SG.0.02600500 | 0.5 | 2.5 | 68 | 22 | 424 | 75 | 270 |
| SG.0.02601000 | 1 | 2.5 | 68 | 22 | 424 | 75 | 270 |
| SG.0.02602200 | 2 | 2.5 | 75 | 22 | 424 | 75 | 270 |
| SG.0.02602100 | 2 | 5 | 96 | 42 | 466 | 110 | 330 |
| SG.0.02603000 | 3 | 5 | 96 | 42 | 466 | 110 | 330 |
| SG.0.02605000 | 5 | 5 | 110 | 44 | 466 | 110 | 334 |

# Elektrische Kettingtakel SG.DTS / Electric Chain Hoist SG.DTS

SIEMENS besturingssysteem /
SIEMENS relais




Hoogste en laagste micro-eindschakelaar /
Upper and lower limit micro switch

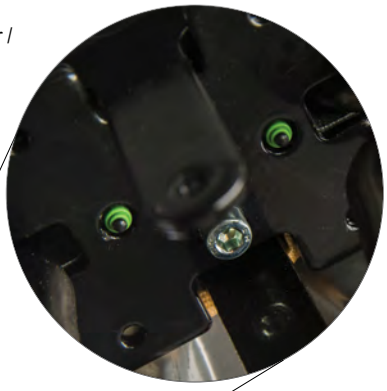







RUD® hijsketting /
RUD® load chain



Eenvoudige plug&play-aansluitingen /Easy
plug&play connections

Hoogwaardige, duurzame ketting eindstop /High
quality, durable chain end buffer



# Afstandsbediening / Remote Control



SG.RC.0402

geschikt voor /
suitable for






SG.RC.C.2.0202

## Eigenschappen

- Alleen geschikt voor de DELTA® kettingtakels model DTS en DMS.
- Kan achteraf worden gemonteerd en afwisselend worden gebruikt met de stuurkabel.
- Lichte, maar robuuste zender uitgerust met noodstop.
- Afmetingen zender (LxBxH): 205 x 60 x 53
- Afmetingen ontvanger (LxBxH): 205 x 86 x 130
- Voldoet aan de Machinerichtlijn 2006/42/EG.

## Features

- Only suitable for the DELTA® chain hoists model DTS and DMS.
- Can be retrofitted and used alternately with the control cable through plug&play connection.
- Light, yet robust transmitter equipped with emergency stop button.
- Dimensions transmitter (LxWxH): 205 x 60 x 53
- Dimensions receiver (LxWxH): 205 x 86 x 130
- Complies with the Machinery Directive 2006/42/EC.



Eenvoudige plug&play-aansluiting /Easy plug&play connection

| Specificaties / Specifications | | |
|---|---|---|
| | Zender<br>Transmitter | Ontvanger<br>Receiving Unit |
| Besturing bescherming / Control protection | IP 65 | |
| Operatiebereik vrije ruimte / Operation distance in open space | 100 m | |
| Bedrijfstemperatuur / Operating temperature | -10°C - +40°C | |
| Netto gewicht / Net weight | 0.3 kg | 0.4 kg |
| Stroomvoorziening / Power supply | 3V (2x AA) | 18V - 65V |

| Specificaties / Specifications | | | |
|---|---|---|---|
| Artikelnummer<br>Article code | Aantal takels<br>Number of hoists | Functies<br>Functions | Hijssnelheid type<br>Lifting speed type |
| SG.RC.0201 | 1 | 2 | 1 |
| SG.RC.0202 | 1 | 2 | 2 |
| SG.RC.0401 | 1 | 4 | 1 |
| SG.RC.0402 | 1 | 4 | 2 |
| | | | |
| SG.RC.C.2.0201 | 2 | 2 | 1 |
| SG.RC.C.2.0202 | 2 | 2 | 2 |
| SG.RC.C.2.0401 | 2 | 4 | 1 |
| SG.RC.C.2.0402 | 2 | 4 | 2 |
| | | | |
| SG.RC.C.4.0201 | 4 | 2 | 1 |
| SG.RC.C.4.0202 | 4 | 2 | 2 |
| SG.RC.C.4.0401 | 4 | 4 | 1 |
| SG.RC.C.4.0402 | 4 | 4 | 2 |

| | | |
|---|---|---|
| 2 = twee knoppen / two buttons<br>4 = vier knoppen / four buttons | ↕<br>↕↔ | 1 = enkele snelheid / single speed<br>2 = dubbele snelheid / double speed |







| | | Premium Model DH.0.DEH | Model SG.0.DTS |
|---|---|---|---|
| Beschikbare modellen / Available models | | 0.125 - 2 ton / 400V | 0.25 - 15 ton / 400V |
| Hijssnelheid / Lifting speed | 0.250 ton | 8/2 m/min | 7/2.3 m/min |
| | 0.500 ton | 8/2 m/min | 7.6/2.5 m/min |
| | 1.000 ton | 8/2 m/min | 5/1.7 m/min |
| | 2.000 ton | 4/1 m/min | 2.5/0.85 m/min |
| Netto gewicht / Net weight | 0.250 ton | 22 kg | 50 kg |
| | 0.500 ton | 33 kg | 51 kg |
| | 1.000 ton | 53 kg | 57 kg |
| | 2.000 ton | 58 kg | 64 kg |

Vergelijking van behuizing afmetingen / Comparison of body dimensions

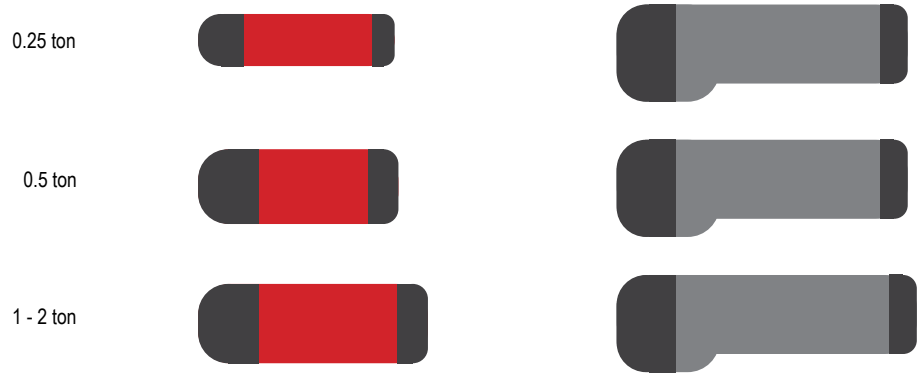


| | |
|---|---|
| Behuizing bescherming / Housing protection | IP 55 |
| Classificatie / Classification | M5/2m (ISO/FEM) |
| Inschakelduur / Duty cycle | 40% |
| Stuurspanning / Control voltage | 24 V |
| Overlastbeveiliging / Overload protection | Slipkoppeling / Slip clutch |
| Eindschakelaar / Limit switch | Hoogste en laagste microschakelaar / Upper and lower micro switch |
| Thermische bescherming / Thermal protection | Warmtesensor / Heat sensor |
| Hijsketting / Load chain | RUD |
| Besturingssysteem / Control system | SIEMENS / EATON |

# Elektrische Kettingtakel SG.DMS / Electric Chain Hoist SG.DMS

## Eigenschappen

- Robuuste aluminium behuizing.
- Geschikt voor een breed scala aan industriële toepassingen.
- Wartel lasthaak met veiligheidsklep.
- Makkelijk te demonteren voor onderhoudsdoeleinden.
- Met SIEMENS besturingssysteem.
- Permanent gesmeerde transmissie, zorgt voor een soepele en stille werking.
- Geleverd met bedieningsschakelaar, voedingskabel en kettingbak.
- Voldoet aan de Machinerichtlijn 2006/42/EG. Geleverd met testcertificaat, CE-conformiteitsverklaring en gebruiksaanwijzing.

## Features

- Robust aluminium housing.
- Suitable for a wide range of industrial applications.
- Swivel load hook with safety latch.
- Easy to disassemble for maintenance purposes.
- Control system with SIEMENS relais.
- Permanently lubricated transmission, ensures smooth and quiet operation.
- Supplied with control switch, power cable and chain container.
- Complies with the Machinery Directive 2006/42/EC. Supplied with test certificate, CE declaration of conformity and operating instructions.




SG.0.DMS

SG.0.DMS.XXXXX = 230V
SG.0.DMS110.XXXXX = 110V

| Specificaties / Specifications | | | | | | | |
|---|---|---|---|---|---|---|---|
| Artikelnummer | Capaciteit | Hijssnelheid | Hijsketting | Parten | Energieverbruik | Netto gewicht | Extra gewicht |
| Article code | Capacity | Lifting speed | Load chain | Chain falls | Power output | Net weight | Extra weight |
| | ton | m/min | Øxmm | | kW | kg | kg/m |
| SG.0.DMS.00501 | 0.5 | 7.6 | 6.3 x 19 | 1 | 1.2 | 55 | 0.9 |
| SG.0.DMS.01001 | 1 | 5 | 8 x 24 | 1 | 1.2 | 61 | 1.5 |
| SG.0.DMS.02201 | 2 | 2.5 | 8 x 24 | 2 | 1.2 | 68 | 3 |

| Specificaties / Specifications | |
|---|---|
| Voltage / Operating voltage | 230V / 50Hz / 1Ph / 110V / 50Hz / 1Ph |
| Hijssnelheid / Lifting speed | Enkele snelheid / Single speed |
| Hijsketting / Load chain | Lastketting volgens EN 818-7-DAT/DT / Load chain according to EN 818-7-DAT/DT |
| Stuurkabel / Control cable | Standaard ≈6 meter / Standard ≈6 meter |
| Stroomkabel / Power cable | ≈1 meter met stekker / ≈1 meter with plug |
| Behuizing bescherming / Housing protection | IP 55 |
| Besturing bescherming / Control protection | IP 65 |
| Classificatie / Classification | M5/2m (ISO/FEM) |
| Inschakelduur / Starts per uur / Duty cycle / Starts per hour | 40% / 240 |
| Isolatieklasse / Insulation class | F |
| Bedrijfstemperatuur / Operating temperature | -10°C - +40°C |
| Ladingtype / Load type | Alleen voor goederen, niet geschikt om personen te hijsen / Goods, may not be used to lift people |

| Beveiliging / Protection | |
|---|---|
| Schakelaar / Control switch | 24V schakelaar met noodstop / 24V pendant control switch with emergency stop button |
| Overlastbeveiliging / Overload protection | Extern instelbare slipkoppeling / Externally adjustable slip clutch |
| Rem / Brake | Elektromagnetische veerdrukrem, houdt de lading ook bij stroomuitval stevig vast / Electromagnetic spring pressure brake, holds the load in the event of power failure |
| Eindschakelaar / Limit switch | Electro-mechanische hoogste en laagste eindschakelaar / Electro-mechanical upper and lower limit switch |
| Thermische bescherming / Thermal protection | Beschermd door warmtesensor / Protected through heat sensor |

| Afmetingen / Dimensions | | | | | | | | | |
|---|---|---|---|---|---|---|---|---|---|
| Artikelnummer / Article code | A | B | C | D | E | F | H | J | K |
| SG.0.DMS.00501 | 390 | 350 | 214 | 80 | 142 | 102 | 470 | 40 | 25 |
| SG.0.DMS.01001 | 390 | 350 | 214 | 80 | 142 | 102 | 520 | 45 | 31 |
| SG.0.DMS.02201 | 390 | 350 | 214 | 80 | 142 | 102 | 760 | 53 | 38 |

# Elektrische Kettingtakel SG.DMS / Electric Chain Hoist SG.DMS

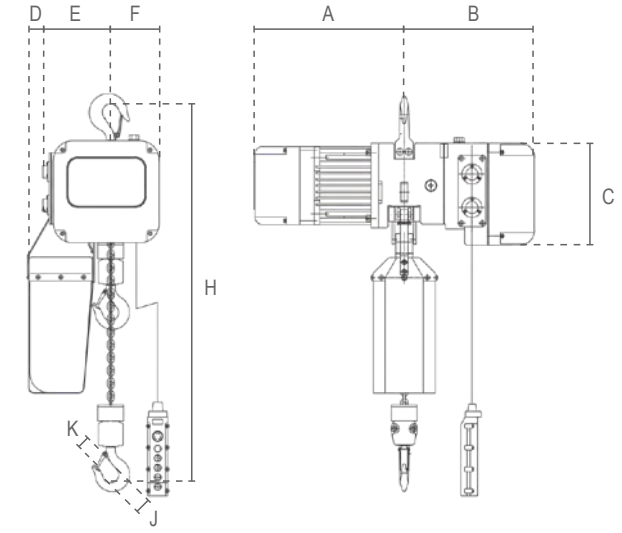





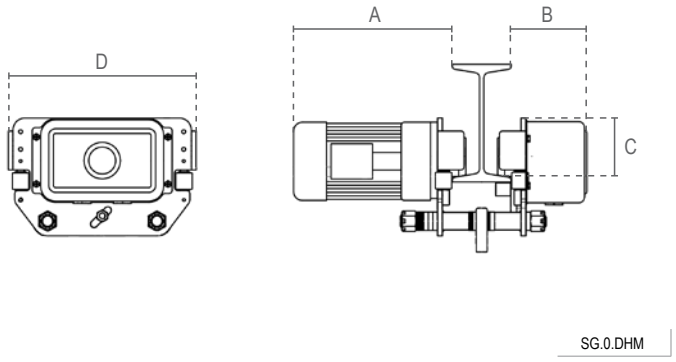


SG.0.DHM

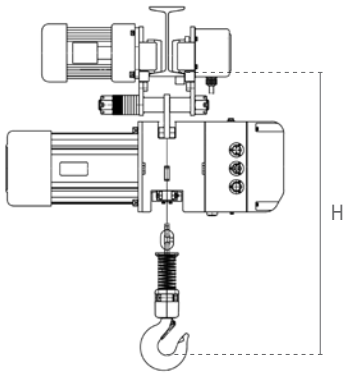


SG.0.DMD

## Eigenschappen

- Elektrische kettingtakel gemonteerd op een elektrische loopkat met een lage bouwhoogte.
- Gebalanceerde steunwielen maken het mogelijk om soepel over de balk te bewegen.
- Afbreukbeveiligingsbeugels dienen als val-, breek- en stootbeveiliging. Bovendien uitgerust met kantelbeveiliging.
- Permanent gesmeerde, kogel gelagerde wielen zorgen voor een soepele verplaatsing.
- Geschikt voor de meeste I- en H-balken.

## Features

- Electric chain hoist mounted on low headroom electric trolley.
- Balance support wheels enable smooth travelling along the beam.
- Safety bars serve as fall-, breaking- and impact protection. Additionally equipped with tilting protection.
- Permanently lubricated, ball bearing mounted wheels allow for smooth traversing.
- Suitable for most I- and H-beam profiles.

| Specificaties / Specifications | | | | | | |
|---|---|---|---|---|---|---|
| Artikelnummer | Capaciteit | Rijsnelheid | Energieverbruik loopkat | Balkbreedte | Netto gewicht | Min. hoogte (H) |
| Article code | Capacity | Traversing speed | Power output trolley | Beam width | Net weight | Min. height (H) |
| | ton | m/min | kW | mm | kg | mm |
| SG.0.DMD.00501 | 0.5 | 13.5 | 0.2 | 74-300 | 88 | 480 |
| SG.0.DMD.01001 | 1 | 13.5 | 0.2 | 74-300 | 94 | 510 |
| SG.0.DMD.02201 | 2 | 13.5 | 0.4 | 74-300 | 108 | 695 |

| Specificaties / Specifications | | | | | Afmetingen / Dimensions | | | |
|---|---|---|---|---|---|---|---|---|
| Artikelnummer | Capaciteit | Min. radius | Wiel diameter | Netto gewicht | | | | |
| Article code | Capacity | Min. radius | Wheel diameter | Net weight | A | B | C | D |
| | ton | m | mm | kg | | | | |
| | 0.5 | 2.5 | 68 | 33 | 336 | 130 | 97 | 340 |
| | 1 | 2.5 | 68 | 33 | 336 | 132 | 97 | 340 |
| | 2 | 2.5 | 75 | 40 | 338 | 132 | 113 | 340 |

# Elektrische Kettingtakel US / Electric Chain Hoist US




plug & play afstandsbediening /plug & play remote control




## Eigenschappen

- Geschikt voor een breed scala aan industriële toepassingen.
- Mag in geen service-auto ontbreken; maakt uw monteur ARBO-proof.
- Eenvoudig te bedienen en te transporteren door zijn lage gewicht.
- Wartel lasthaak met veiligheidsklep.
- Geleverd klaar voor gebruik met bedieningsschakelaar, voedingskabel en kettingbak.
- Voldoet aan de Machinerichtlijn 2006/42/EG. Geleverd met testcertificaat, CE-conformiteitsverklaring en gebruiksaanwijzing.

## Features

- Suitable for a wide range of industrial applications.
- Should not be missing in any service van; makes your service engineer “Health & Safety” proof.
- Easy handling and high transportability due to low weight.
- Swivel load hook with safety latch.
- Supplied ready to use with control switch, power cable and chain container.
- Complies with the Machinery Directive 2006/42/EC. Supplied with test certificate, CE declaration of conformity and operating instructions.

KARWEITAKEL ®
*JOBBING HOIST ®*

CZ.0.US

| Specificaties / Specifications | | | | | | | |
|---|---|---|---|---|---|---|---|
| Artikelnummer | Capaciteit | Hijssnelheid | Hijsketting | Parten | Energieverbruik | Netto gewicht | Extra gewicht |
| Article code | Capacity | Lifting speed | Load chain | Chain falls | Power output | Net weight | Extra weight |
| | ton | m/min | Øxmm | | kW | kg | kg/m |
| CZ.0.US.901 | 0.5 | 5 | 6.3 x 19 | 1 | 1.3 | 16 | 0.9 |
| CZ.0.US.902 | 1 | 2.5 | 6.3 x 19 | 2 | 1.3 | 17 | 1.8 |
| CZ.0.US.903 | 1 | 4 | 7.1 x 20.2 | 1 | 2 | 26 | 1.1 |
| CZ.0.US.904 | 2 | 2 | 7.1 x 20.2 | 2 | 2 | 31 | 2.2 |

| Specificaties / Specifications | |
|---|---|
| Voltage / Operating voltage | 230V / 50-60Hz / 1Ph (110V op aanvraag/on request) |
| Hijssnelheid / Lifting speed | Enkele snelheid / Single speed |
| Hijsketting / Load chain | Lastketting volgens EN 818-7-DAT/DT / Load chain according to EN 818-7-DAT/DT |
| Stuurkabel / Control cable | Standaard ≈6 meter / Standard ≈6 meter |
| Stroomkabel / Power cable | ≈5 meter met stekker / ≈5 meter with plug |
| Behuizing bescherming / Housing protection | IP 54 |
| Besturing bescherming / Control protection | IP 65 |
| Classificatie / Classification | M4/1Am (ISO/FEM) |
| Inschakelduur / Starts per uur / Duty cycle / Starts per hour | 30% / 180 |
| Isolatieklasse / Insulation class | F |
| Bedrijfstemperatuur / Operating temperature | -10°C - +40°C |
| Ladingtype / Load type | Alleen voor goederen, niet geschikt om personen te hijsen / Goods, may not be used to lift people |

| Beveiliging / Protection | |
|---|---|
| Schakelaar / Control switch | 230V schakelaar met noodstop / 230V pendant control switch with emergency stop button |
| Overlastbeveiliging / Overload protection | Extern instelbare slipkoppeling / Externally adjustable slip clutch |
| Rem / Brake | Mechanische rem / Mechanical brake |
| Eindschakelaar / Limit switch | US.901 + 902: Geen eindschakelaar, beveiligt door slipkoppeling / No limit switch, protected through slip clutch US.903 + 904: Elektromagnetische hoogste eindschakelaar, laagste positie beveiligt door slipkoppeling / Electromagnetic upper limit switch, lower limit protected through slip clutch |
| Thermische bescherming / Thermal protection | Geen bescherming / No protection |

# Elektrische Kettingtakel US / Electric Chain Hoist US

## Optionele toebehoren / Optional accessories

alleen voor / only for US.901 & US.902



CP.0.CEC.0010

| 10m verlengkabel / 10m extension cable |
|---|
| Om de stuurkabel te verlengen. (max. 2x per takel) |
| For extending the control cable. (max. 2x per hoist) |



CZ.JACKET

| Beschermhoes / Protective cover |
|---|
| Voor extra bescherming tegen regen. |
| For extra protection against rain. |



CZ.BOX.US

| Opbergbox / Storage box |
|---|
| Voor eenvoudig opslag en transport. |
| For convenient storage and transportation. |

| Netto gewicht / Net weight | Afmetingen / Dimensions |
|---|---|
| kg | mm |
| 24 | 670 x 580 x 480 |

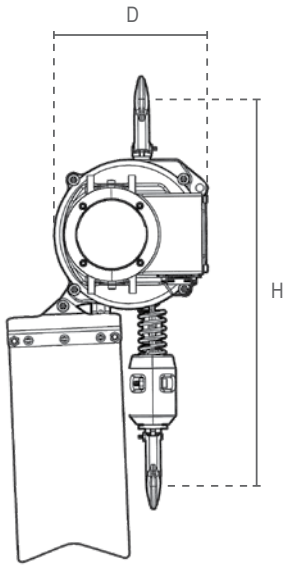


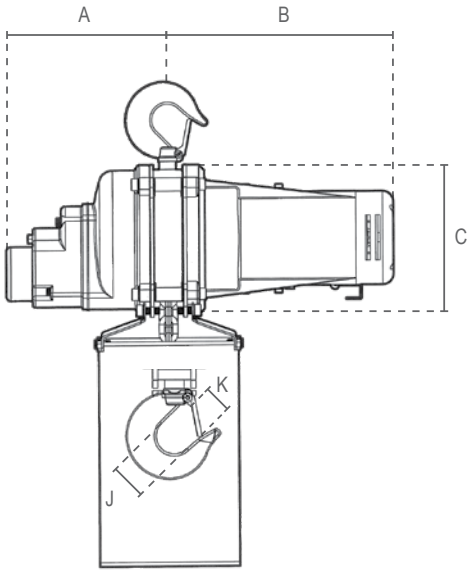


CZ.0.US.901 & 902

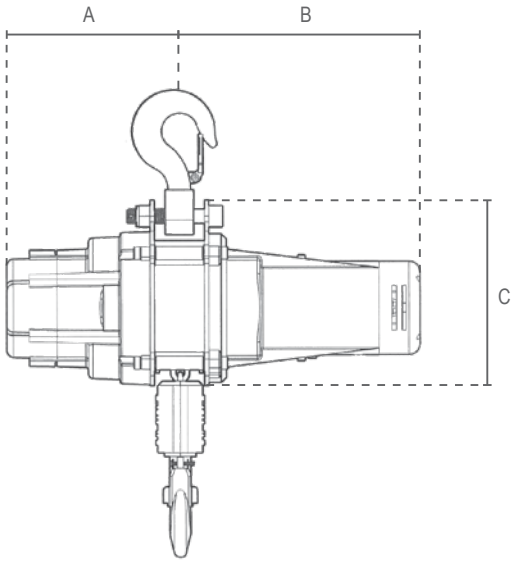


CZ.0.US.903 & 904

| Artikelnummer / Article code | Afmetingen / Dimensions | | | | | | |
|---|---|---|---|---|---|---|---|
| | A | B | C | D | H | J | K |
| CZ.0.US.901 | 175 | 245 | 165 | 160 | 480 | 38 | 21 |
| CZ.0.US.902 | 175 | 245 | 165 | 160 | 500 | 38 | 21 |
| CZ.0.US.903 | 191 | 265 | 206 | 212 | 500 | 39 | 29 |
| CZ.0.US.904 | 191 | 265 | 206 | 214 | 594 | 46 | 37 |

# Afstandsbediening / Remote Control








## Eigenschappen

- Alleen geschikt voor de DELTA® kettingtakel model US en de DELTA® lieren model DKL en DPS.
- Kan achteraf worden gemonteerd en afwisselend worden gebruikt met de stuurkabel.
- Lichte, maar robuuste zender uitgerust met noodstop.
- Afmetingen zender (LxBxH): 190 x 70 x 50
- Afmetingen ontvanger (LxBxH): 175 x 125 x 75
- Voldoet aan de Machinerichtlijn 2006/42/EG.

## Features

- Only suitable for the DELTA® chain hoist model US and the DELTA® winches model DKL and DPS.
- Can be retrofitted and used alternately with the control cable through plug&play connection.
- Light, yet robust transmitter equipped with emergency stop button.
- Dimensions transmitter (LxWxH): 190 x 70 x 50
- Dimensions receiver (LxWxH): 175 x 125 x 75
- Complies with the Machinery Directive 2006/42/EC.



Eenvoudige plug&play-aansluiting /Easy plug&play connection

| Specificaties / Specifications | | |
|---|---|---|
| | Zender | Ontvanger |
| | Transmitter | Receiving Unit |
| Besturing bescherming / Control protection | IP 65 | |
| Operatiebereik vrije ruimte / Operation distance in open space | 100 m | |
| Bedrijfstemperatuur / Operating temperature | -10°C - +40°C | |
| Netto gewicht / Net weight | 0.4 kg | 1.9 kg |
| Stroomvoorziening / Power supply | 6V (4x AA) | - |

| Specificaties / Specifications | |
|---|---|
| Artikelnummer | Type |
| Article code | Model |
| CZ.RC.US.901.902 | CZ.0.US.901<br>CZ.0.US.902 |
| CZ.RC.US.903.904 | CZ.0.US.903<br>CZ.0.US.904 |
| CZ.RC.DKL | CP.0.DKL.160<br>CP.0.DKL.230<br>CP.0.DKL.300<br>CP.0.DKL.500 |
| CZ.RC.DPS | CP.0.DPS.200<br>CP.0.DPS.250<br>CP.0.DPS.300<br>CP.0.DPS.500 |
| CZ.RC.DPT | CP.0.DPT.30075<br>CP.0.DPT.30151 |




optioneel
optional



optioneel
optional

| | | | Model SG.0.DMS | Model CZ.0.US |
|---|---|---|---|---|
| Beschikbare modellen / Available models | | | 0.5 - 2 ton / 110V/230V | 0.5 - 2 ton / 110V/230V |
| Hijssnelheid / Lifting speed | 0.500 ton | | 7.6 m/min | 5 m/min |
| | 1.000 ton | 2 parts / 2 fall | - | 2,5 m/min |
| | | 1 part / 1 fall | 5 m/min | 4 m/min |
| | 2.000 ton | | 2.5 m/min | 2 m/min |
| Netto gewicht / Net weight | 0.500 ton | | 55 kg | 16 kg |
| | 1.000 ton | 2 parts / 2 fall | - | 17 kg |
| | | 1 part / 1 fall | 61 kg | 26 kg |
| | 2.000 ton | | 68 kg | 31 kg |

Vergelijking van behuizing afmetingen /
Comparison of body dimensions



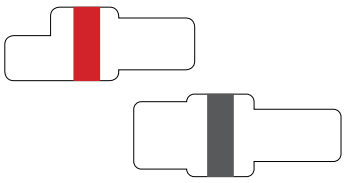

| | | | |
|---|---|---|---|
| Motor | Koolborstelvrije motor / Brushless motor | | Koolborstel motor / Brush motor |
| Behuizing bescherming / Housing protection | IP 55 | | IP 54 |
| Classificatie / Classification<br>Inschakelduur / Duty cycle | M5/2m (ISO/FEM)<br>40% | | M4/1Am (ISO/FEM)<br>30% |
| Stuurspanning / Control voltage | 24 V | | Direct geschakeld / Direct control |
| Overlastbeveiliging / Overload protection | Slipkoppeling / Slip clutch | | |
| Eindschakelaar / Limit switch | Hoogste en laagste microschakelaar / Upper and lower micro switch | | Hoogste eindschakelaar / Upper limit switch (US.903 + 904) |
| Thermische bescherming / Thermal protection | Warmtesensor / Heat sensor | | - |
| Hijsketting / Load chain | RUD | | |
| Besturingssysteem / Control system | SIEMENS | | - |

# Batterij Kettingtakel / Battery Chain Hoist

## Eigenschappen

- Eenvoudig te installeren voor snel gebruik.
- Eenvoudig te bedienen en te transporteren door zijn lage gewicht en draagbare koffer.
- Ideaal voor toepassingen zonder stroomvoorziening.
- Batterijvermogen: 25min bij maximale belasting.
- Geleverd met reserve batterij en oplader.
- Wartel lasthaak met veiligheidsklep.
- Geleverd klaar voor gebruik met bedieningsschakelaar en kettingbak.
- Voldoet aan de Machinerichtlijn 2006/42/EG. Geleverd met testcertificaat, CE-conformiteitsverklaring en gebruiksaanwijzing.

## Features

- Fast installation.
- Easy handling and high transportability due to low weight and carrying case.
- Ideal for applications without power supply.
- Battery power: 25min at maximum load.
- Delivered with spare battery and charger.
- Swivel load hook with safety latch.
- Supplied ready to use with control switch and chain container.
- Complies with the Machinery Directive 2006/42/EC. Supplied with test certificate, CE declaration of conformity and operating instructions.










CZ.0.DBH

| Specificaties / Specifications | | | | | | | |
|---|---|---|---|---|---|---|---|
| Artikelnummer | Capaciteit | Hijshoogte | Hijssnelheid | Hijsketting | Parten | Energieverbruik | Netto gewicht |
| Article code | Capacity | Hoisting height | Lifting speed | Load chain | Chain falls | Power output | Net weight |
| | ton | m | m/min | Øxmm | | kW | kg |
| CZ.0.DBH.250.10 | 0.25 | 10 | 4.5 | 4 x 12 | 1 | - | 12 |
| CZ.0.DBH.500.05 | 0.5 | 5 | 2.2 | 4 x 12 | 2 | - | 13.5 |

| Specificaties / Specifications | |
|---|---|
| Voltage / Operating voltage | 18V (5.0Ah 90Wh) oplaadbare li-ion batterij / 18V (5.0Ah 90Wh) rechargeable li-ion battery |
| Hijssnelheid / Lifting speed | Variabele snelheid (tijdens zakken) / Variable speed (when lowering) |
| Hijsketting / Load chain | Gegalvaniseerde lastketting volgens EN 818-7 / Galvanized load chain according to EN 818-7 |
| Stuurkabel / Control cable | Standaard ≈3 meter / Standard ≈3 meter |
| Stroomkabel / Power cable | - |
| Behuizing bescherming / Housing protection | IP 54 |
| Besturing bescherming / Control protection | IP 50 |
| Classificatie / Classification | M4/1Am (ISO/FEM) |
| Inschakelduur / Starts per uur / Duty cycle / Starts per hour | 30% / 180 |
| Isolatieklasse / Insulation class | F |
| Bedrijfstemperatuur / Operating temperature | -10°C - +40°C |
| Ladingtype / Load type | Alleen voor goederen, niet geschikt om personen te hijsen / Goods, may not be used to lift people |

| Beveiliging / Protection | |
|---|---|
| Schakelaar / Control switch | Schakelaar met noodstop / Pendant control switch with emergency stop button |
| Overlastbeveiliging / Overload protection | Extern instelbare slipkoppeling en digitale beveiliging / Externally adjustable slip clutch and digital protection |
| Rem / Brake | Mechanische rem / Mechanical brake |
| Eindschakelaar / Limit switch | Elektromagnetische hoogste eindschakelaar, laagste positie beveiligt door slipkoppeling / Electromagnetic upper limit switch, lower limit protected through slip clutch |
| Thermische bescherming / Thermal protection | Geen bescherming / No protection |

# Batterij Kettingtakel / Battery Chain Hoist

| Draagkoffer / Carrying case | | |
|---|---|---|
| Capaciteit | Totale gewicht * | Afmetingen |
| Capacity | Total weight * | Dimensions |
| ton | kg | mm |
| 0.25 | 20.3 | 640 x 420 x 280 |
| 0.5 | 23.2 | |

* inclusief alle accessoires en standaard hijshoogte /including all accessories and standard hoisting height






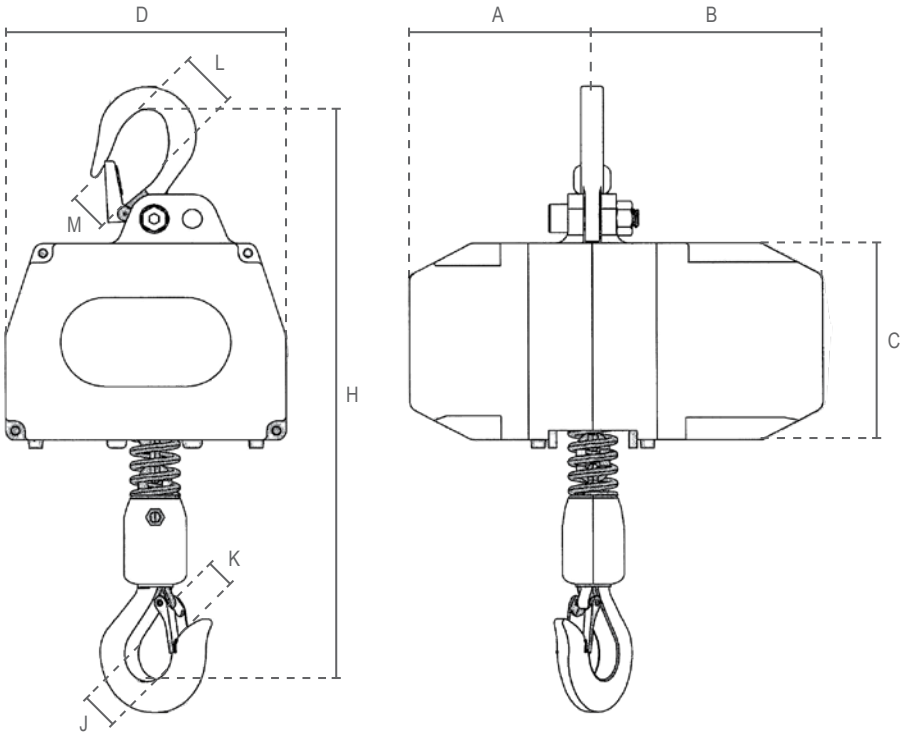


| Afmetingen / Dimensions | | | | | | | | | |
|---|---|---|---|---|---|---|---|---|---|
| Artikelnummer / Article code | A | B | C | D | H | J | K | L | M |
| CZ.0.DBH.250 | 114 | 144 | 122 | 173 | 355 | 29 | 19 | 27 | 20 |
| CZ.0.DBH.500 | 114 | 144 | 122 | 173 | 375 | 29 | 19 | 27 | 20 |

# Pneumatische Kettingtakel / Pneumatic Chain Hoist




## Eigenschappen

- Afgesloten en geluiddempende tandwielkast voor intensief gebruik.
- Met bediening voor variabele snelheid.
- Schok- en corrosiebestendige behuizing.
- Schoepenmotor voor maximaal rendement.
- Geschikt voor potentieel gevaarlijke en explosieve omgevingen. ATEX-certificaat op aanvraag.
- Geleverd zonder luchtdroger, filter, drukregelaar, olie-nevelaar en vochtafscheider.
- Geleverd met bediening en kettingbak.
- Voldoet aan de Machinerichtlijn 2006/42/EG. Geleverd met testcertificaat, CE-conformiteitsverklaring en gebruiksaanwijzing.

## Features

- Sealed and noise reduced planetary gearbox enables heavy duty cycles.
- Control for variable speed.
- Shock and corrosion resistant body.
- Vane lifting motor for maximum torque.
- Suitable for potentially dangerous and explosive environments. ATEX certificate upon request.
- Supplied without air dryer and F.R.L unit.
- Supplied with control and chain container.
- Complies with the Machinery Directive 2006/42/EC. Supplied with test certificate, CE declaration of conformity and operating instructions.

| Specificaties / Specifications | | | | | | | |
|---|---|---|---|---|---|---|---|
| Artikelnummer | Capaciteit | Hijssnelheid | Hijsketting | Parten | Energieverbruik | Netto gewicht | Extra gewicht |
| Article code | Capacity | Lifting speed | Load chain | Chains falls | Power output | Net weight | Extra weight |
| | ton | m/min (6 bar) | Øxmm | | kW (6 bar) | kg | kg/m |
| CD.0.PH.0025 | 0.25 | 18 | 6.3 x 19 | 1 | 1.5 | 32 | 0.9 |
| CD.0.PH.0050 | 0.5 | 11 | 6.3 x 19 | 1 | 1.5 | 36 | 0.9 |
| CD.0.PH.0100 | 1 | 7.6 | 7.1 x 20.2 | 1 | 2.0 | 51 | 1.1 |
| CD.0.PH.0200 | 2 | 3.8 | 7.1 x 20.2 | 2 | 2.0 | 60 | 2.2 |
| CD.0.PH.0320 | 3.2 | 4.8 | 13 x 36 | 1 | 3.5 | 108 | 3.7 |
| CD.0.PH.0630 | 6.3 | 2.4 | 13 x 36 | 2 | 3.5 | 138 | 7.4 |
| CD.0.PH.1000 | 10 | 1.6 | 16 x 45 | 2 | 3.5 | 186 | 10.4 |
| CD.0.PH.1600 | 16 | 1.0 | 16 x 45 | 3 | 3.5 | 327 | 15.6 |
| CD.0.PH.2000 | 20 | 0.8 | 16 x 45 | 4 | 3.5 | 383 | 20.8 |

| Specificaties / Specifications | |
|---|---|
| Hijsketting / Load chain | Lastketting volgens EN 818-7-DAT/DT / Load chain according to EN 818-7-DAT/DT |
| Bediening / Control cable | Standaard geleverd met kettingkoordbediening. Op aanvraag ook met drukknop bediening leverbaar. /Standard with toggle cord control. On request with manual valve control. |
| Behuizing bescherming / Housing protection | IP 54 |
| Classificatie / Classification | M5/2m (ISO/FEM) |
| Inschakelduur / Duty cycle | 40% |
| Bedrijfstemperatuur / Operating temperature | -40°C - +80°C |
| ATEX zone / ATEX zone | ATEX Zone 2 CE EX II 3G IIB T3 / 3D T200°C |
| Ladingtype / Load type | Alleen voor goederen, niet geschikt om personen te hijsen / Goods, may not be used to lift people |

| Beveiliging / Protection | |
|---|---|
| Overlastbeveiliging / Overload protection | De overlastbeveiliging sluit de luchttoevoer af en activeert de rem door de constant de luchtdruk te monitoren. /Overload protection shuts off main air supply and engages the brake by monitoring the air pressure |
| Rem / Brake | Veiligheidsrem hout de last wanneer de luchttoevoer is afgesloten. / Safety brake, holds the load when the air is cut off |
| Eindschakelaar / Limit switch | Hoogste en laagste eindschakelaar, schakelt de hoofdluchttoevoer uit / Upper and lower limit switch, shuts off main air supply |

# Pneumatische Kettingtakel / Pneumatic Chain Hoist

| Specificaties / Specifications | | | | | | |
|---|---|---|---|---|---|---|
| Capaciteit | Luchtdruk | Luchtverbruik | Geluidsniveau bij hijsen | Geluidsniveau bij dalen | Lucht inlaat | Hoofdlijn luchttoevoer |
| Capacity | Air pressure | Air consumption | Sound level while lifting | Sound level while lowering | Air inlet | Main air supply |
| ton | bar | m³/min (6 bar) | dB | dB | mm | mm |
| 0.25 | 4-6 | 2 | 85 | 82 | 12.7 | 19.1 |
| 0.5 | 4-6 | 2 | 85 | 82 | 12.7 | 19.1 |
| 1 | 4-6 | 2 | 85 | 82 | 12.7 | 19.1 |
| 2 | 4-6 | 2 | 85 | 82 | 12.7 | 19.1 |
| 3.2 | 4-6 | 4 | 90 | 87 | 19.1 | 50.8 |
| 6.3 | 4-6 | 4 | 90 | 87 | 19.1 | 50.8 |
| 10 | 4-6 | 4 | 90 | 87 | 25.4 | 50.8 |
| 16 | 4-6 | 4 | 90 | 87 | 25.4 | 50.8 |
| 20 | 4-6 | 4 | 90 | 87 | 25.4 | 50.8 |

## Optionele toebehoren / Optional accessories



CD.0.PR



CD.0.PT

## Eigenschappen

- Pneumatische kettingtakel gemonteerd op een pneumatische loopkat met een lage bouwhoogte.
- Afbreukbeveiligingsbeugels dienen als val-, breek- en stootbeveiliging. Bovendien uitgerust met kantelbeveiliging.
- Permanent gesmeerde, kogel gelagerde wielen zorgen voor een soepele verplaatsing.
- Geschikt voor de meeste I- en H-balken.

## Features

- Pneumatic chain hoist mounted on low headroom pneumatic trolley.
- Safety bars serve as fall-, breaking- and impact protection. Additionally equipped with tilting protection.
- Permanently lubricated, ball bearing mounted wheels allow for smooth traversing.
- Suitable for most I- and H-beam profiles.

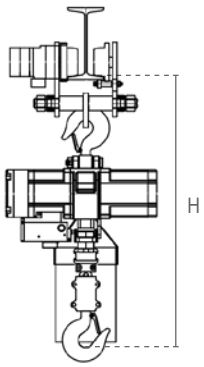


| Specificaties / Specifications | | | | | | | | |
|---|---|---|---|---|---|---|---|---|
| Artikelnummer | Capaciteit | Rijsnelheid | Energieverbruik | Balkbreedte | Min. radius | Wieldiameter | Netto gewicht | Min. hoogte (H) |
| Article code | Capacity | Traversing speed | Power output | Beam width | Min. radius | Wheel diameter | Net weight | Min. height (H) |
| | ton | m/min | kW (6 bar) | mm | m | mm | kg | mm |
| CD.0.PT.005 | 0.5 | | 0.2 | | | | | |
| CD.0.PT.010 | 1 | 20 | 0.2 | 75-125 | 1.3 | 78 | 32 | 621 |
| CD.0.PT.020 | 2 | 20 | 0.2 | 100-150 | 1.5 | 90 | 40 | 751 |
| CD.0.PT.032 | 3.2 | 10 | 0.2 | 125-175 | 1.8 | 100 | 55 | 902 |
| CD.0.PT.063 | 6.3 | 4 | 0.2 | 125-175 | 3 | 140 | 70 | 1125 |

| Specificaties / Specifications | | | |
|---|---|---|---|
| Capaciteit | Luchtdruk | Luchtverbruik | Luchtinlaat |
| Capacity | Air pressure | Air consumption | Air inlet |
| ton | bar | m³/min (6 bar) | mm |
| 0.5 | 6 | 0.6 | 19.1 |
| 1 | 6 | 0.6 | 19.1 |
| 2 | 6 | 0.6 | 19.1 |
| 3.2 | 6 | 0.6 | 19.1 |
| 6.3 | 6 | 0.6 | 19.1 |

# Pneumatische Kettingtakel / Pneumatic Chain Hoist

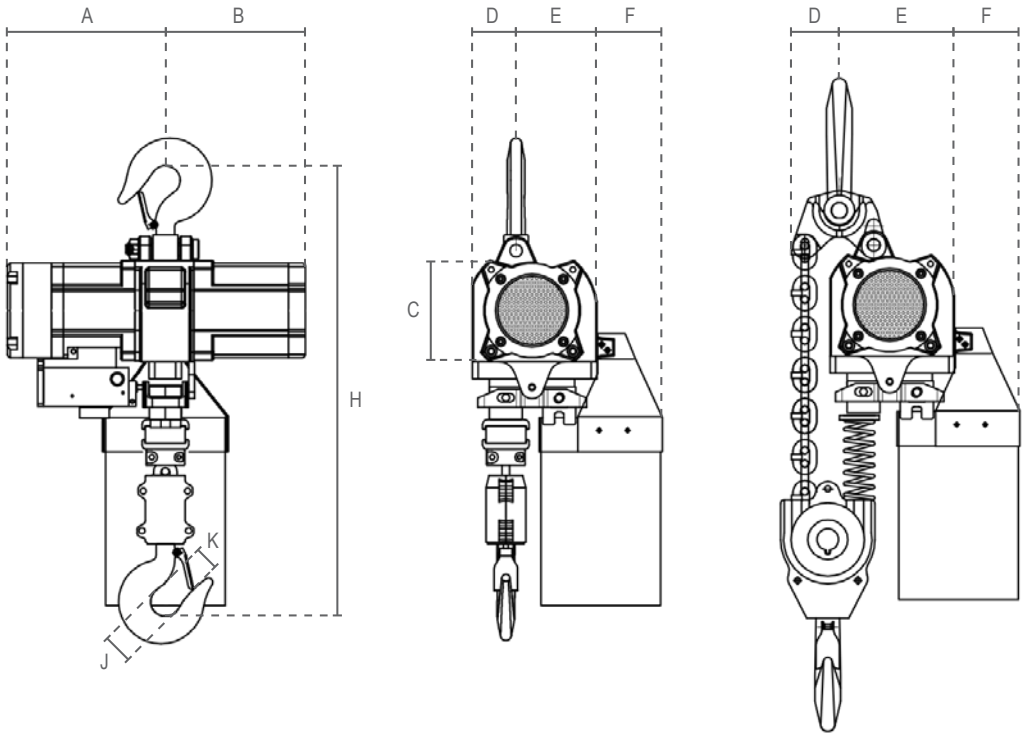


| Artikelnummer / Article code | Afmetingen / Dimensions | | | | | | | | |
|---|---|---|---|---|---|---|---|---|---|
| | A | B | C | D | E | F | H | J | K |
| CD.0.PH.0025 | 197 | 174 | 110 | 70 | 70 | 104 | 535 | 40 | 32 |
| CD.0.PH.0050 | 228 | 174 | 110 | 70 | 70 | 104 | 535 | 40 | 32 |
| CD.0.PH.0100 | 255 | 205 | 132 | 65 | 95 | 91 | 540 | 40 | 32 |
| CD.0.PH.0200 | 255 | 205 | 132 | 73 | 87 | 159 | 760 | 46 | 40 |
| CD.0.PH.0320 | 313 | 246 | 166 | 77 | 142 | 115 | 814 | 52 | 47 |
| CD.0.PH.0630 | 313 | 246 | 166 | 77 | 142 | 115 | 1022 | 62 | 52 |
| CD.0.PH.1000 | 308 | 308 | 238 | 170 | 156 | - | 1100 | 75 | 69 |
| CD.0.PH.1600 | 374 | 372 | 238 | 166 | 160 | - | 1350 | 120 | 109 |
| CD.0.PH.2000 | 374 | 372 | 238 | 166 | 160 | - | 1400 | 120 | 109 |

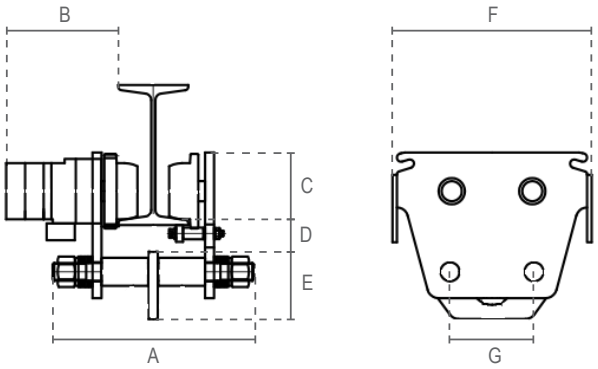


| Artikelnummer / Article code | Afmetingen / Dimensions | | | | | | |
|---|---|---|---|---|---|---|---|
| | A | B | C | D | E | F | G |
| CD.0.PT.005 | | | | | | | |
| CD.0.PT.010 | 264 | 208 | 83 | 56 | 102 | 294 | 125 |
| CD.0.PT.020 | 300 | 210 | 95 | 48 | 115 | 322 | 130 |
| CD.0.PT.032 | 360 | 217 | 105 | 48 | 120 | 356 | 150 |
| CD.0.PT.063 | 365 | 219 | 145 | 77 | 264 | 386 | 280 |




www.DECORLUX.be
HIJSTECHNIEK
TECHNIQUE LEVAGE
HEBETECHNIK
LIFTING TECHNICS

# Handkettingtakels
# Manual Chain Hoists



Premium Handkettingtakel
Premium Manual Chain Hoist
## Type Delta RCB



Handkettingtakel
Manual Chain Hoist
## Type Delta YCB



Vonkvrije Handkettingtakel
Sparkproof Manual Chain Hoist
## Type Delta SBC



Aluminium Handkettingtakel
Aluminium Manual Chain Hoist
## Type Delta ACB



RVS Handkettingtakel
Stainless Steel Manual Chain Hoist
## Type Delta ICB



Handkettingtakel met Kettingloopkat Manual Chain Hoist with Geared Trolley
## Type Delta BCB-TR




# Yale*lift 360*

# Type Delta RCB

## Premium Handkettingtakel / Premium Manual Chain Hoist

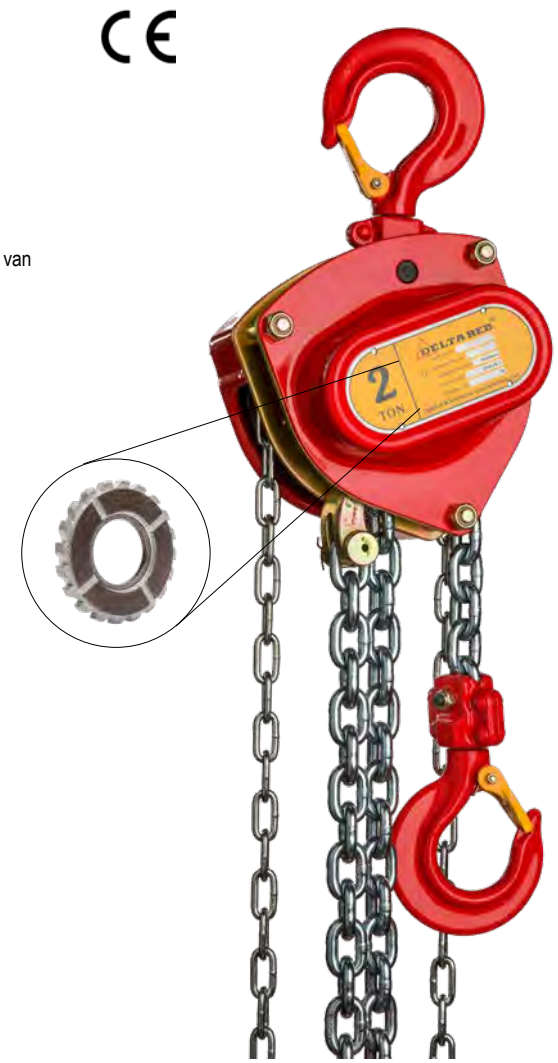


## Eigenschappen

- Onderhoudsvriendelijk ontwerp. Rem en transmissie zijn eenvoudig toegankelijk.
- Fijn geslepen assen, nestenwiel en tandwielen zorgen voor een soepele werking.
- Dubbele behuizing biedt bescherming tegen stof en water.
- Robuuste behuizing is bestand tegen externe schokken zonder schade aan de uitlijning van de lagers.
- Meetpunten op de haken.

Premium eigenschappen:

- Verbeterde corrosiebestendige, gesloten cilinderrollagers.
- Verbeterde behuizing met minder gewicht voor eenvoudigere hantering.
- Voldoet aan de Machinerichtlijn 2006/42/EG. Geleverd met testcertificaat, CE-conformiteitsverklaring en gebruiksaanwijzing.

## Features

- Maintenance friendly design. Brake and transmission are easy to access.
- Precision machined shafts, chain sprocket and gears ensure smooth operation.
- High strength double casing provides protection against dust and water.
- Robust housing endures external shock without damage to the bearing alignment.
- Measurement points on the hooks.

Premium features:

- Enhanced corrosion resistant, caged cylindrical roller bearings.
- Enhanced housing with reduced weight for easier handling.
- Complies with the Machinery Directive 2006/42/EC. Supplied with test certificate, CE declaration of conformity and operating instructions.

**(**) Standaard hijshoogte / Standard Lifting Height**
(03)= 3m
(06)= 6m
(10)= 10m

| Specificaties / Specifications | | | | | | | | |
|---|---|---|---|---|---|---|---|---|
| Artikelnummer | Capaciteit | Hijsketting | Parten | Test load | Inspanning voor max lading | Handketting voor 1m lift | Netto gewicht | Extra gewicht |
| Article code | Capacity | Load chain | Chain falls | Test load | Effort for max load | Hand chain for 1m lift | Net weight | Extra weight |
| | ton | Øxmm | | kN | N | m | kg * | kg/m ** |
| DR.0.041005(**) | 0.5 | 5 x 15 | 1 | 6.1 | 186 | 34 | 3.8 | 1.4 |
| DR.0.041010(**) | 1 | 6 x 18 | 1 | 12.3 | 270 | 42 | 6.2 | 1.7 |
| DR.0.041015(**) | 1.5 | 8 x 24 | 1 | 18.4 | 345 | 56 | 9.2 | 2.4 |
| DR.0.041020(**) | 2 | 8 x 24 | 1 | 24.5 | 460 | 73 | 9.8 | 2.4 |
| DR.0.041030(**) | 3 | 8 x 24 | 2 | 36.8 | 355 | 112 | 10.5 | 3.9 |
| DR.0.041050(**) | 5 | 10 x 30 | 2 | 61.1 | 462 | 164 | 21.7 | 5.5 |
| DR.0.041100(**) | 10 | 10 x 30 | 4 | 122.5 | 488 | 327 | 53.1 | 10.1 |
| DR.0.041200(**) | 20 | 10 x 30 | 8 | 235.2 | 488x2 | 327x2 | 110.5 | 19.4 |
| DR.0.041300(**) | 30 | 10 x 30 | 12 | 367.5 | 488x2 | 333x2 | 220 | 28.5 |
| DR.0.041500(**) | 50 | | | | | | | |

* zonder last- en handketting / without load- and handchain ** per meter hijshoogte voor last- en handketting / per meter hoisting height for load- and handchain

| Specificaties / Specifications | |
|---|---|
| Haken / Hooks | Gesmede stalen haken met gegoten klep / Drop-forged steel hooks with cast latch |
| Lastketting / Load chain | Gegalvaniseerde lastketting volgens EN 818-7-T / Galvanized load chain according to EN 818-7-T |
| Handketting / Hand chain | Gegalvaniseerde handketting / Galvanized hand chain |
| Bedrijfstemperatuur / Operating temperature | -10°C - +60°C |
| ATEX zone / ATEX zone | niet geschikt / not suitable |
| Ladingtype / Load type | Alleen voor goederen, niet geschikt om personen te hijsen / Goods, may not be used to lift people |

| Beveiliging / Protection | |
|---|---|
| Overlastbeveiliging / Overload protection | Beschikbaar met slipkoppeling overlastbeveiliging / Available with slip clutch overload protection |
| Rem / Brake | Premium eigenschap: Automatische veiligheidsrem met dubbele pallen. Stalen remschijf met gesinterde remblokken voor een langere levensduur. / Premium feature: Automatic safety load brake with twin pawls. Extremely durable steel brake disc with sintered brake pads. |

## Type Delta RCB

Premium Handkettingtakel / Premium Manual Chain Hoist

Beschikbaar met slipkoppeling overlastbeveiliging /
Available with slip clutch **Overload Protection**

CE

| Artikelnummer | Capaciteit |
|---|---|
| Article code | Capacity |
| | ton |
| DR.0.044005(**).OP | 0.5 |
| DR.0.044010(**).OP | 1 |
| DR.0.044015(**).OP | 1.5 |
| DR.0.044020(**).OP | 2 |
| DR.0.044030(**).OP | 3 |
| DR.0.044050(**).OP | 5 |
| DR.0.044100(**).OP | 10 |
| DR.0.044200(**).OP | 20 |
| DR.0.044300(**).OP | 30 |
| DR.0.044500(**).OP | 50 |

**(**) Standaard hijshoogte / Standard Lifting Height**
(03)= 3m
(06)= 6m
(10)= 10m

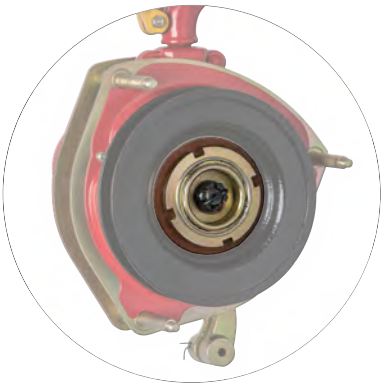

CE

3 ton handkettingtakel met **enkele** parts /
3 ton manual chain hoist with **single** chain fall

Standaard model / Standard model

### Eigenschappen

Voordeel:
» Ongeveer anderhalf keer sneller in hijsen en zakken.

### Features

Advantage:
» Almost 1.5x faster in lifting and lowering.



DR.0.041031(**)



DR.0.041030(**)

**(**) Standaard hijshoogte / Standard Lifting Height**
(03)= 3m
(06)= 6m
(10)= 10m

| Specificaties / Specifications | | | | | | | | |
|---|---|---|---|---|---|---|---|---|
| Artikelnummer | Capaciteit | Hijsketting | Parten | Test load | Inspanning voor max lading | Handketting voor 1m lift | Netto gewicht | Extra gewicht |
| Article code | Capacity | Load chain | Chain falls | Test load | Effort for max load | Hand chain for 1m lift | Net weight | Extra weight |
| | ton | Øxmm | | kN | N | m | kg * | kg/m ** |
| DR.0.041031(**) | 3 | 10 x 30 | 1 | 36.8 | 372 | 77 | 21.3 | 3.2 |
| DR.0.041030(**) | 3 | 8 x 24 | 2 | 36.8 | 355 | 112 | 10.5 | 3.9 |

* zonder last- en handketting / without load- and handchain ** per meter hijshoogte voor last- en handketting / per meter hoisting height for load- and handchain

CE

# Premium Handkettingtakel / Premium Manual Chain Hoist

## Gemonteerd op een trolley met lage bouwhoogte / Mounted on a low headroom geared trolley

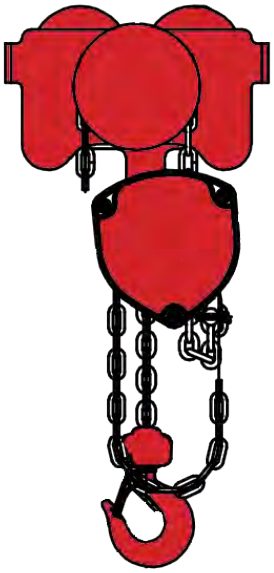

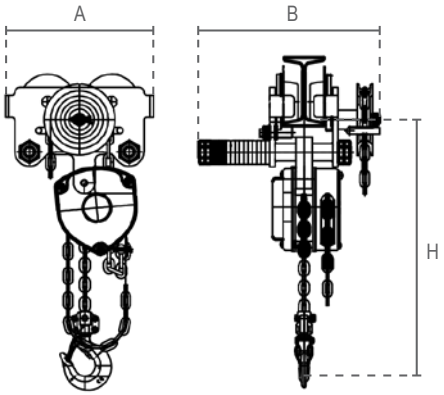


| Specificaties / Specifications | | | | | |
|---|---|---|---|---|---|
| Artikelnummer | Capaciteit | Netto gewicht | Balkbreedte | Min. radius | Wiel diameter (R) |
| Article code | Capacity | Net weight | Beam width | Min. radius | Wheel diameter (R) |
| | ton | kg | mm | m | mm |
| DR.0.091005(**) | 0.5 | 13.9 | 64-140 | 0.9 | 58 |
| DR.0.091010(**) | 1 | 21.8 | 68-140 | 1 | 75 |
| DR.0.091020(**) | 2 | 30.7 | 76-165 | 1.2 | 90 |
| DR.0.091030(**) | 3 | 45.5 | 76-300 | 1.5 | 110 |
| DR.0.091050(**) | 5 | 38.6 | 94-300 | 2 | 122 |
| DR.0.091100(**) | 10 | 141.7 | 136-300 | 3 | 151 |
| DR.0.091200(**) | 20 | 347.3 | 144-300 | 4.5 | 200 |
| DR.0.091300(**) | 30 | 378.8 | 144-300 | 4.5 | 200 |

| Beveiliging / Protection | |
|---|---|
| Overlastbeveiliging / Overload protection | Standaard met slipkoppeling overlastbeveiliging / Standard with slip clutch overload protection |
| Rem / Brake | Premium eigenschap: Automatische veiligheidsrem met dubbele pallen. Stalen remschijf met gesinterde remblokken voor een langere levensduur.<br>Premium feature: Automatic safety load brake with twin pawls. Extremely durable steel brake disc with sintered brake pads. |

| Afmetingen / Dimensions | | | |
|---|---|---|---|
| Capaciteit / Capacity<br>ton | A | B | C |
| 0.5 | 238 | 296 | 286 |
| 1 | 273 | 295 | 341 |
| 2 | 303 | 357 | 404 |
| 3 | 363 | 501 | 382 |
| 5 | 436 | 514 | 555 |
| 10 | 455 | 470 | 820 |
| 20 | 642 | 525 | 950 |
| 30 | 642 | 525 | 1280 |

CE

Gesloten cilinderrollagers voor intensief gebruik. /
Closed heavy-duty cylindrical roller bearings.





Stalen remschijf met gesinterde remblokken voor een langere levensduur en betere prestaties. /
Extremely durable steel brake disc with sintered brake pads offers high performance.

## Premium
## Type Delta RCB

Hoogwaardig gegoten veiligheidskleppen. /High-quality cast safety latches.

Compacte behuizing. /
Compact housing.

Beschikbaar met slipkoppeling overlastbeveiliging. /Available with slip clutch overload protection.




## Standaard
## Type Delta YCB



# Type Delta YCB

## Handkettingtakel / Manual Chain Hoist




DB.0.064 DY.0.044

## Eigenschappen

- » Onderhoudsvriendelijk ontwerp. Rem en transmissie zijn eenvoudig toegankelijk.
- » De transmissie wordt ondersteund door hoogwaardige lagers.
- » Fijn geslepen assen, nestenwiel en tandwielen zorgen voor een soepele werking.
- » Dubbele behuizing biedt bescherming tegen stof en water.
- » Robuuste behuizing is bestand tegen externe schokken zonder schade aan de uitlijning van de lagers.
- » Meetpunten op de haken.
- » Voldoet aan de Machinerichtlijn 2006/42/EG. Geleverd met testcertificaat, CE-conformiteitsverklaring en gebruiksaanwijzing.

## Features

- » Maintenance friendly design. Brake and transmission are easy to access.
- » The transmission is supported by high-quality bearings.
- » Precision machined shafts, chain sprocket and gears ensure smooth operation.
- » High strength double casing provides protection against dust and water.
- » Robust housing endures external shock without damage to the bearing alignment.
- » Measurement points on the hooks.
- » Complies with the Machinery Directive 2006/42/EC. Supplied with test certificate, CE declaration of conformity and operating instructions.

- » Beschikbaar in het zwart met zwarte lastketting volgens EN 818-7-T. Andere capaciteiten op aanvraag.
- » Available in black with black load chain according to EN 818-7-T. Other capacities on request.

**(**) Standaard hijshoogte / Standard Lifting Height**
(03)= 3m
(06)= 6m
(10)= 10m

| Specificaties / Specifications | | | | | | | | |
|---|---|---|---|---|---|---|---|---|
| Artikelnummer | Capaciteit | Hijsketting | Parten | Test load | Inspanning voor max lading | Handketting voor 1m lift | Netto gewicht | Extra gewicht |
| Article code | Capacity | Load chain | Chain falls | Test load | Effort for max load | Hand chain for 1m lift | Net weight | Extra weight |
| | ton | Øxmm | | kN | N | m | kg * | kg/m ** |
| DY.0.044005(**) | 0.5 | 6 x 18 | 1 | 6.1 | 200 | 34 | 4.7 | 1.7 |
| DY.0.044010(**) | 1 | 6 x 18 | 1 | 12.3 | 320 | 42 | 6.8 | 1.7 |
| DY.0.044015(**) | 1.5 | 8 x 24 | 1 | 18.4 | 360 | 56 | 9.7 | 2.4 |
| DY.0.044020(**) | 2 | 8 x 24 | 1 | 24.5 | 365 | 73 | 11.3 | 2.4 |
| DY.0.044030(**) | 3 | 8 x 24 | 2 | 36.8 | 385 | 112 | 13.4 | 3.9 |
| DY.0.044050(**) | 5 | 10 x 30 | 2 | 61.1 | 435 | 164 | 23.1 | 5.5 |
| DY.0.044100(**) | 10 | 10 x 30 | 4 | 122.5 | 435 | 327 | 49.1 | 10.1 |
| DY.0.044200(**) | 20 | 10 x 30 | 8 | 235.2 | 435x2 | 327x2 | 105.8 | 19.4 |
| | | | | | | | | |
| DB.0.0640025(**) | 0.25 | 4 x 12 | 1 | 3.7 | 190 | 30 | 4.1 | 0.8 |
| DB.0.064005(**) | 0.5 | 6 x 18 | 1 | 6.1 | 200 | 34 | 4.7 | 1.7 |
| DB.0.064010(**) | 1 | 6 x 18 | 1 | 12.3 | 320 | 42 | 6.8 | 1.7 |

* zonder last- en handketting / without load- and handchain ** per meter hijshoogte voor last- en handketting / per meter hoisting height for load- and handchain

| Specificaties / Specifications | |
|---|---|
| Haken / Hooks | Gesmede stalen haken met gegoten klep / Drop-forged steel hooks with cast latch |
| Lastketting / Load chain | Gegalvaniseerde lastketting volgens EN 818-7-T / Galvanized load chain according to EN 818-7-T |
| Handketting / Hand chain | Gegalvaniseerde handketting / Galvanized hand chain |
| Bedrijfstemperatuur / Operating temperature | -10°C - +60°C |
| ATEX zone / ATEX zone | niet geschikt / not suitable |
| Ladingtype / Load type | Alleen voor goederen, niet geschikt om personen te hijsen / Goods, may not be used to lift people |

| Beveiliging / Protection | |
|---|---|
| Overlastbeveiliging / Overload protection | Zonder overlastbeveiliging / No overload protection |
| Rem / Brake | Automatische veiligheidsrem met dubbele remschrijven en pallen / Automatic safety load brake with twin friction discs and pawls |

CE

# Handkettingtakel / Manual Chain Hoist

Beschikbaar tot
Available up to
**50 ton**



# Type Delta SCB-EG

## Vonkvrije Handkettingtakel / Sparkproof Manual Chain Hoist




## Eigenschappen

- Geschikt voor potentieel gevaarlijke en explosieve omgevingen. ATEX-certificaat (zone 1 of 2) op aanvraag.
- Verbeterde corrosiebestendigheid door verchroomde behuizing.
- Onderhoudsvriendelijk ontwerp. Rem en transmissie zijn eenvoudig toegankelijk.
- De transmissie wordt ondersteund door lagers.
- Dubbele behuizing biedt bescherming tegen stof en water.
- Voldoet aan de Machinerichtlijn 2006/42/EG. Geleverd met testcertificaat, CE-conformiteitsverklaring en gebruiksaanwijzing.

## Features

- Suitable for potentially dangerous and explosive environments. ATEX certificate (zone 1 or 2) upon request.
- Improved corrosion resistance due to chrome-plated housing.
- Maintenance friendly design. Brake and transmission are easy to access.
- The transmission is supported by bearings.
- Double casing provides protection against dust and water.
- Complies with the Machinery Directive 2006/42/EC. Supplied with test certificate, CE declaration of conformity and operating instructions.

**(**) Standaard hijshoogte / Standard Lifting Height**
(03)= 3m
(06)= 6m
(10)= 10m

| Specificaties / Specifications | | | | | | | | |
|---|---|---|---|---|---|---|---|---|
| Artikelnummer | Capaciteit | Hijsketting | Parten | Test load | Inspanning voor max lading | Handketting voor 1m lift | Netto gewicht | Extra gewicht |
| Article code | Capacity | Load chain | Chain falls | Test load | Effort for max load | Hand chain for 1m lift | Net weight | Extra weight |
| | ton | Øxmm | | kN | N | m | kg * | kg/m ** |
| ATEX Zone 1 | | | | | | | | |
| DC.0.065005(**) | 0.5 | 6 x 18 | 1 | 6.3 | 200 | 34 | 4.1 | 1.7 |
| DC.0.065010(**) | 1 | 6 x 18 | 1 | 12.5 | 304 | 42 | 6.2 | 1.7 |
| DC.0.065020(**) | 2 | 8 x 24 | 1 | 25.0 | 410 | 73 | 10.4 | 2.4 |
| DC.0.065030(**) | 3 | 8 x 24 | 2 | 37.5 | 343 | 112 | 13.6 | 3.9 |
| DC.0.065050(**) | 5 | 10 x 30 | 2 | 63.0 | 414 | 164 | 21.9 | 5.5 |
| DC.0.065100(**) | 10 | 10 x 30 | 4 | 125.0 | 423 | 327 | 48.5 | 10.1 |
| DC.0.065200(**) | 20 | 10 x 30 | 8 | 250.0 | 435x2 | 327x2 | 104.4 | 19.4 |
| ATEX Zone 2 \| | | | | | | | | |
| DC.0.066005(**) | 0.5 | 6 x 18 | 1 | 6.3 | 200 | 34 | 4.1 | 1.7 |
| DC.0.066010(**) | 1 | 6 x 18 | 1 | 12.5 | 304 | 42 | 6.2 | 1.7 |
| DC.0.066020(**) | 2 | 8 x 24 | 1 | 25.0 | 410 | 73 | 10.4 | 2.4 |
| DC.0.066030(**) | 3 | 8 x 24 | 2 | 37.5 | 343 | 112 | 13.6 | 3.9 |
| DC.0.066050(**) | 5 | 10 x 30 | 2 | 63.0 | 414 | 164 | 21.9 | 5.5 |
| DC.0.066100(**) | 10 | 10 x 30 | 4 | 125.0 | 423 | 327 | 48.5 | 10.1 |
| DC.0.066200(**) | 20 | 10 x 30 | 8 | 250.0 | 435x2 | 327x2 | 104.4 | 19.4 |

* zonder last- en handketting / without load- and handchain ** per meter hijshoogte voor last- en handketting / per meter hoisting height for load- and handchain

| Specificaties / Specifications | |
|---|---|
| Haken / Hooks | Verkoperde gesmede stalen haken met gegoten klep / Copper-plated drop-forged steel hooks with cast latch |
| Lastketting / Load chain | Gegalvaniseerde lastketting volgens EN 818-7-T / Galvanized load chain according to EN 818-7-T |
| Handketting / Hand chain | RVS handketting / Stainless steel hand chain |
| Bedrijfstemperatuur / Operating temperature | -10°C - +60°C |
| ATEX zone / ATEX zone | ATEX Zone 1 CE EX II 2G h IIC T4 / 2D h IIIC T135°C of/or ATEX Zone 2 CE EX II 3G h IIC T4 / 3D h IIIC T135°C |
| Ladingtype / Load type | Alleen voor goederen, niet geschikt om personen te hijsen / Goods, may not be used to lift people |

| Beveiliging / Protection | |
|---|---|
| Overlastbeveiliging / Overload protection | Standaard met slipkoppeling overlastbeveiliging / Standard with slip clutch overload protection |
| Rem / Brake | Automatische veiligheidsrem met dubbele remschrijven en pallen / Automatic safety load brake with twin friction discs and pawls |

# Type Delta SCB-SS — Vonkvrije Handkettingtakel / Sparkproof Manual Chain Hoist




## Eigenschappen

- Geschikt voor potentieel gevaarlijke en explosieve omgevingen. ATEX-certificaat op aanvraag.
- Verbeterde corrosiebestendigheid door verchroomde behuizing.
- Onderhoudsvriendelijk ontwerp. Rem en transmissie zijn eenvoudig toegankelijk.
- De transmissie wordt ondersteund door lagers.
- Dubbele behuizing biedt bescherming tegen stof en water.
- Voldoet aan de Machinerichtlijn 2006/42/EG. Geleverd met testcertificaat, CE-conformiteitsverklaring en gebruiksaanwijzing.

## Features

- Suitable for potentially dangerous and explosive environments. ATEX certificate upon request.
- Improved corrosion resistance due to chrome-plated housing.
- Maintenance friendly design. Brake and transmission are easy to access.
- The transmission is supported by bearings.
- Double casing provides protection against dust and water.
- Complies with the Machinery Directive 2006/42/EC. Supplied with test certificate, CE declaration of conformity and operating instructions.

**(**) Standaard hijshoogte / Standard Lifting Height**
(03)= 3m
(06)= 6m
(10)= 10m

| Specificaties / Specifications | | | | | | | | |
|---|---|---|---|---|---|---|---|---|
| Artikelnummer | Capaciteit | Hijsketting | Parten | Test load | Inspanning voor max lading | Handketting voor 1m lift | Netto gewicht | Extra gewicht |
| Article code | Capacity | Load chain | Chain falls | Test load | Effort for max load | Hand chain for 1m lift | Net weight | Extra weight |
| | ton | Øxmm | | kN | N | m | kg * | kg/m ** |
| DC.0.063005(**) | 0.5 | 6 x 18 | 1 | 6.3 | 200 | 34 | 4.1 | 1.7 |
| DC.0.063009(**) | 0.9 | 6 x 18 | 1 | 12.5 | 304 | 42 | 6.2 | 1.7 |
| DC.0.0630125(**) | 1.25 | 8 x 24 | 1 | 25.0 | 410 | 73 | 10.4 | 2.4 |
| DC.0.063025(**) | 2.5 | 8 x 24 | 2 | 37.5 | 343 | 112 | 13.6 | 3.9 |
| DC.0.063040(**) | 4 | 10 x 30 | 2 | 63.0 | 414 | 164 | 21.9 | 5.5 |
| DC.0.063080(**) | 8 | 10 x 30 | 4 | 125.0 | 423 | 327 | 48.5 | 10.1 |
| DC.0.063160(**) | 16 | 10 x 30 | 8 | 250.0 | 435x2 | 327x2 | 104.4 | 19.4 |

* zonder last- en handketting / without load- and handchain ** per meter hijshoogte voor last- en handketting / per meter hoisting height for load- and handchain

| Specificaties / Specifications | |
|---|---|
| Haken / Hooks | Verkoperde gesmede stalen haken met gegoten klep / Copper-plated drop-forged steel hooks with cast latch |
| Lastketting / Load chain | RVS lastketting volgens EN 818-7 / Stainless steel load chain according to EN 818-7 |
| Handketting / Hand chain | RVS handketting / Stainless steel hand chain |
| Bedrijfstemperatuur / Operating temperature | -10°C - +60°C |
| ATEX zone / ATEX zone | ATEX Zone 1 CE EX II 2G h IIC T4 / 2D h IIIC T135°C |
| Ladingtype / Load type | Alleen voor goederen, niet geschikt om personen te hijsen / Goods, may not be used to lift people |

| Beveiliging / Protection | |
|---|---|
| Overlastbeveiliging / Overload protection | Standaard met slipkoppeling overlastbeveiliging / Standard with slip clutch overload protection |
| Rem / Brake | Automatische veiligheidsrem met dubbele remschrijven en pallen / Automatic safety load brake with twin friction discs and pawls |

# Type Delta ACB

## Aluminium Handkettingtakel / Aluminium Manual Chain Hoist

### Eigenschappen

- Lage gewicht met sterke aluminium behuizing.
- Onderhoudsvriendelijk ontwerp. Rem en transmissie zijn eenvoudig toegankelijk.
- De transmissie wordt ondersteund door hoogwaardige lagers.
- Fijn geslepen assen, nestenwiel en tandwielen zorgen voor een soepele werking.
- Meetpunten op de haken.
- Voldoet aan de Machinerichtlijn 2006/42/EG. Geleverd met testcertificaat, CE-conformiteitsverklaring en gebruiksaanwijzing.

### Features

- Ultra low-weight, yet high-strength aluminium casing.
- Maintenance friendly design. Brake and transmission are easy to access.
- The transmission is supported by high-quality bearings.
- Precision machined shafts, chain sprocket and gears ensure smooth operation.
- Measurement points on the hooks.
- Complies with the Machinery Directive 2006/42/EC. Supplied with test certificate, CE declaration of conformity and operating instructions.




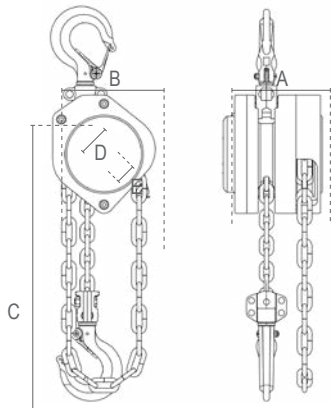






**(**) Standaardhijshoogte / Standard Lifting Height**
(3)= 3m
(6)= 6m
(10)= 10m

| Specificaties / Specifications | | | | | | | | |
|---|---|---|---|---|---|---|---|---|
| Artikelnummer | Capaciteit | Hijsketting | Parten | Test load | Inspanning voor max lading | Handketting voor 1m lift | Netto gewicht | Extra gewicht |
| Article code | Capacity | Load chain | Chain falls | Test load | Effort for max load | Hand chain for 1m lift | Net weight | Extra weight |
| | ton | Øxmm | | kN | N | m | kg * | kg/m ** |
| DC.0.0880025(**) | 0.25 | 4 x 12 | 1 | 3.1 | 202 | 36 | 1.9 | 0.7 |
| DC.0.0880050(**) | 0.5 | 5 x 15 | 1 | 6.1 | 213 | 26 | 3.1 | 0.9 |

* zonder last- en handketting / without load- and handchain ** per meter hijshoogte voor last- en handketting / per meter hoisting height for load- and handchain

| Specificaties / Specifications | |
|---|---|
| Haken / Hooks | Gesmede stalen haken met klep / Drop-forged steel hooks with latch |
| Lastketting / Load chain | Gegalvaniseerde lastketting volgens EN 818-7-T / Galvanized load chain according to EN 818-7-T |
| Handketting / Hand chain | 3 x 15 Gegalvaniseerde handketting / Galvanized hand chain |
| Bedrijfstemperatuur / Operating temperature | -10°C - +60°C |
| ATEX zone / ATEX zone | niet geschikt / not suitable |
| Ladingtype / Load type | Goederen, mag niet gebruikt worden om mensen te hijsen / Goods, may not be used to lift people |

| Beveiliging / Protection | |
|---|---|
| Overlastbeveiliging / Overload protection | Zonder overlastbeveiliging / No overload protection |
| Rem / Brake | Automatische veiligheidsrem met dubbele remschrijven en pallen / Automatic safety load brake with twin friction discs and pawls |

| Afmetingen / Dimensions | | | | | |
|---|---|---|---|---|---|
| Capaciteit / Capacity<br>ton | A | B | C | D | E |
| 0.25 | 100 | 100 | 260 | 34 | 24 |
| 0.5 | 114 | 118 | 320 | 34 | 24 |

## Type Delta ICB — RVS Handkettingtakel / Stainless Steel Manual Chain Hoist

### Eigenschappen

- Hoge bescherming tegen corrosie en vocht.
- Geschikt voor 'clean rooms' en voedingsindustrie.
- Gehele buitenzijde en haken gemaakt van 304(V2A) roestvast staal.
- Hand- en lastketting gemaakt van 304(V2A) roestvast staal.
- Onderhoudsvriendelijk ontwerp. Rem en transmissie zijn eenvoudig toegankelijk.
- De transmissie wordt ondersteund door hoogwaardige lagers.
- Fijn geslepen assen, nestenwiel en tandwielen zorgen voor een soepele werking.
- Meetpunten op de haken.
- Voldoet aan de Machinerichtlijn 2006/42/EG. Geleverd met testcertificaat, CE-conformiteitsverklaring en gebruiksaanwijzing.

### Features

- Maximum protection against corrosive and high humidity environments.
- Suitable for cleanrooms and food-industry applications.
- All outer body parts and load hooks made from highly corrosion resistant 304(V2A) stainless steel.
- Load and hand chain made from highly corrosion resistant 304(V2A) stainless steel.
- Maintenance friendly design. Brake and transmission are easy to access.
- The transmission is supported by high-quality bearings.
- Precision machined shafts, chain sprocket and gears ensure smooth operation.
- Measurement points on the hooks.
- Complies with the Machinery Directive 2006/42/EC. Supplied with test certificate, CE declaration of conformity and operating instructions.






**(**) Standaard hijshoogte / Standard Lifting Height**
(03)= 3m
(06)= 6m
(10)= 10m

| Specificaties / Specifications | | | | | | | | |
|---|---|---|---|---|---|---|---|---|
| Artikelnummer | Capaciteit | Hijsketting | Parten | Test load | Inspanning voor max lading | Handketting voor 1m lift | Netto gewicht | Extra gewicht |
| Article code | Capacity | Load chain | Chain falls | Test load | Effort for max load | Hand chain for 1m lift | Net weight | Extra weight |
| | ton | Øxmm | | kN | N | m | kg * | kg/m ** |
| DSS.0.066005(**) | 0.5 | 6 x 18 | 1 | 6.25 | 150 | 28 | 6.9 | 1.7 |
| DSS.0.066010(**) | 1 | 7 x 21 | 1 | 12.5 | 304 | 48 | 7.1 | 1.9 |
| DSS.0.066020(**) | 2 | 7 x 21 | 2 | 25 | 335 | 96 | 10.2 | 3.0 |
| DSS.0.066030(**) | 3 | 9 x 27 | 2 | 37.5 | 343 | 146 | 18.3 | 4.4 |
| DSS.0.066050(**) | 5 | 9 x 27 | 3 | 62.5 | 270 | 220 | 38.1 | 6.2 |

* zonder last- en handketting / without load- and handchain ** per meter hijshoogte voor last- en handketting / per meter hoisting height for load- and handchain

| Specificaties / Specifications | |
|---|---|
| Haken / Hooks | Gesmede RVS haken met klep / Drop-forged stainless steel hooks with latch |
| Lastketting / Load chain | RVS lastketting / Stainless steel load chain |
| Handketting / Hand chain | RVS handketting / Stainless steel hand chain |
| Bedrijfstemperatuur / Operating temperature | -10°C - +60°C |
| ATEX zone / ATEX zone | niet geschikt / not suitable |
| Ladingtype / Load type | Goederen, mag niet gebruikt worden om mensen te hijsen / Goods, may not be used to lift people |

| Beveiliging / Protection | |
|---|---|
| Overlastbeveiliging / Overload protection | Zonder overlastbeveiliging / No overload protection |
| Rem / Brake | Automatische veiligheidsrem met dubbele remschrijven en pallen / Automatic safety load brake with twin friction discs and pawls |

# Afmetingen / Dimensions

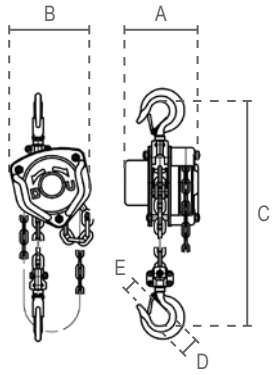


0.25 - 2 ton

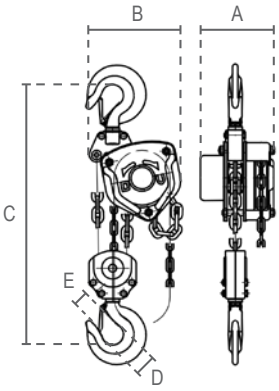


3 - 5 ton

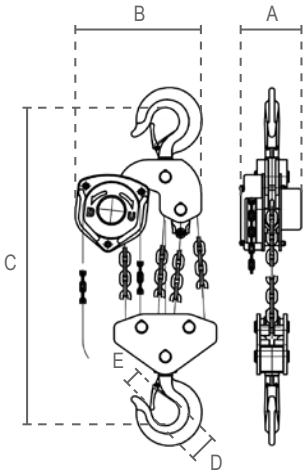


10 ton

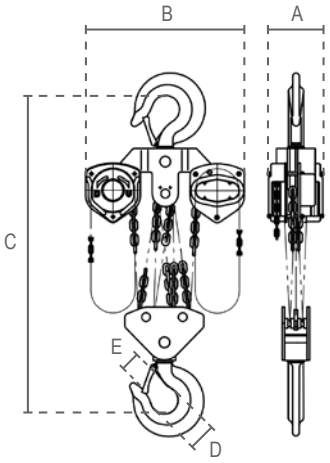


20 ton

## Type RCB

| Afmetingen / Dimensions | | | | | |
|---|---|---|---|---|---|
| Capaciteit / Capacity ton | A | B | C | D | E |
| 0.5 | 128 | 122 | 295 | 35 | 22 |
| 1 | 139 | 175 | 345 | 40 | 26 |
| 1.5 | 161 | 175 | 410 | 45 | 29 |
| 2 | 161 | 175 | 431 | 52 | 35 |
| 3 | 161 | 232 | 414 | 55 | 39 |
| 5 | 180 | 258 | 600 | 68 | 43 |
| 10 | 194 | 384 | 798 | 85 | 58 |
| 20 | 209 | 625 | 890 | 110 | 81 |



## Type YCB

| Afmetingen / Dimensions | | | | | |
|---|---|---|---|---|---|
| Capaciteit / Capacity ton | A | B | C | D | E |
| 0.25 | 102 98 220 | | | 30 | 25 |
| 0.5 | 138 | 137 | 270 | 35 | 28 |
| 1 | 147 | 162 | 317 | 36 | 26 |
| 1.5 | 170 | 183 | 399 | 45 | 33 |
| 2 | 170 | 194 | 414 | 43 | 32 |
| 3 | 170 | 220 | 465 | 50 | 37 |
| 5 | 190 | 288 | 618 | 64 | 46 |
| 10 | 190 | 384 | 798 | 85 | 50 |
| 20 | 209 | 625 | 890 | 110 | 81 |



## Type SCB

| Afmetingen / Dimensions | | | | | |
|---|---|---|---|---|---|
| Capaciteit / Capacity ton | A | B | C | D | E |
| 0.25 | 102 | 98 | 220 | 30 | 25 |
| 0.5 | 113 | 125 | 255 | 36 | 30 |
| 1 | 126 | 147 | 306 | 40 | 34 |
| 1.5 | 141 | 183 | 368 | 45 | 38 |
| 2 | 141 | 183 | 368 | 50 | 41 |
| 3 | 141 | 183 | 486 | 58 | 48 |
| 5 | 163 | 215 | 616 | 64 | 52 |
| 10 | 163 | 405 | 750 | 85 | 64 |
| 20 | 191 | 595 | 1000 | 110 | 85 |
| 30 | 312 | 691 | 1380 | 110 | 81 |
| 50 | 496 | 958 | 2578 | 170 | 125 |



CE

# Afmetingen / Dimensions

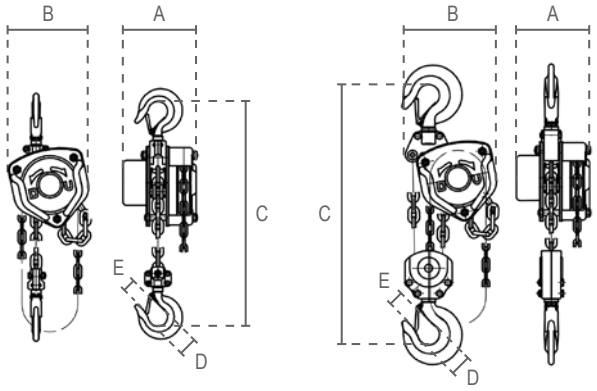


0.5 - 1 ton 2 - 5 ton

## Type ICB

| Afmetingen / Dimensions | | | | | |
|---|---|---|---|---|---|
| Capaciteit / Capacity ton | A | B | C | D | E |
| 0.5 | 151 | 172 | 376 | 40 | 26 |
| 1 | 151 | 172 | 376 | 40 | 26 |
| 2 | 151 | 192 | 425 | 50 | 34 |
| 3 | 173 | 230 | 565 | 55 | 39 |
| 5 | 189 | 365 | 710 | 65 | 41 |



# Handkettingtakel met Kettingloopkat / Manual Chain Hoist with Geared Trolley

## Eigenschappen



- Ultra-lage bouwhoogte.
- Geschikt voor de meeste I- en H-balken.
- Afbreukbeveiligingsbeugels dienen als val-, breek- en stootbeveiliging. Bovendien uitgerust met kantelbeveiliging.
- Permanent gesmeerde, kogel gelagerde wielen zorgen voor een soepele verplaatsing.
- Onderhoudsvriendelijk ontwerp. Rem en transmissie zijn eenvoudig toegankelijk.
- De transmissie wordt ondersteund door lagers.
- Dubbele behuizing biedt bescherming tegen stof en water.
- De onder haak heeft de neiging niet compleet horizontaal te blijven. Een afwijking is normaal en eventueel met de hand te corrigeren.
- Voldoet aan de Machinerichtlijn 2006/42/EG. Geleverd met testcertificaat, CE-conformiteitsverklaring en gebruiksaanwijzing.

## Features

- Ultra-low headroom configuration.
- Suitable for most I- and H-beam profiles.
- Safety bars serve as fall-, breaking- and impact protection. Additionally equipped with tilting protection.
- Permanently lubricated, ball bearing mounted wheels allow for smooth traversing.
- Maintenance friendly design. Brake and transmission are easy to access.
- The transmission is supported by bearings.
- Double casing provides protection against dust and water.
- The bottom hook may not stay completely level during operation. A slight tilt is normal. Manual adjustment of the hook may be required to ensure a smooth operation.
- Complies with the Machinery Directive 2006/42/EC. Supplied with test certificate, CE declaration of conformity and operating instructions.

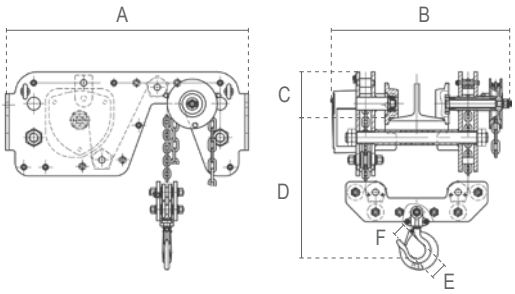


| Specificaties / Specifications | | | | | | | | |
|---|---|---|---|---|---|---|---|---|
| Artikelnummer | Capaciteit | Hijsketting | Parten | Test load | Inspanning voor max lading | Handketting voor 1m lift | Netto gewicht | Extra gewicht |
| Article code | Capacity | Load chain | Chain falls | Test load | Effort for max load | Hand chain for 1m lift | Net weight | Extra weight |
| | ton | Øxmm | | kN | N | m | kg * | kg/m ** |
| DC.0.09201000 | 1 | 5 x 15 | 2 | 12.2 | 304 | - | 61 | 2.8 |
| DC.0.09202000 | 2 | 6 x 18 | 2 | 24.5 | 410 | - | 92 | 3.4 |
| DC.0.09203000 | 3 | 7 x 21 | 2 | 36.7 | 343 | - | 141 | 4.2 |
| DC.0.09205000 | 5 | 10 x 30 | 2 | 61.2 | 414 | - | 252 | 5.5 |
| DC.0.09210000 | 10 | 10 x 30 | 4 | 122.5 | 423 | - | 320 | 11.0 |

* zonder last- en handketting / without load- and handchain ** per meter hijshoogte voor last- en handketting / per meter hoisting height for load- and handchain

| Specificaties / Specifications | |
|---|---|
| Haken / Hooks | Gesmede stalen haken met gegoten klep / Drop-forged steel hooks with cast latch |
| Lastketting / Load chain | Gegalvaniseerde lastketting volgens EN 818-7-T / Galvanized load chain according to EN 818-7-T |
| Handketting / Hand chain | Gegalvaniseerde handketting / Galvanized hand chain |
| Bedrijfstemperatuur / Operating temperature | -10°C - +60°C |
| ATEX zone / ATEX zone | niet geschikt / not suitable |
| Ladingtype / Load type | Alleen voor goederen, niet geschikt om personen te hijsen / Goods, may not be used to lift people |

| Beveiliging / Protection | |
|---|---|
| Overlastbeveiliging / Overload protection | Zonder overlastbeveiliging / No overload protection |
| Rem / Brake | Automatische veiligheidsrem met dubbele remschrijven en pallen / Automatic safety load brake with twin friction discs and pawls |

| Afmetingen / Dimensions | | | | | | | | | |
|---|---|---|---|---|---|---|---|---|---|
| Capaciteit | Balkbreedte | Min. radius | Wiel diameter | | | | | | |
| Capacity | Beam width | Min. radius | Wheel diameter | A | B | C | D | E | F |
| ton | mm | m | mm | | | | | | |
| 1 | 75-150 | 3.5 | 70 | 584 | 440 | 107 | 145 | 40 | 26 |
| 2 | 100-150 | 4 | 80 | 684 | 513 | 122 | 166 | 50 | 34 |
| 3 | 125-175 | 4.5 | 100 | 769 | 608 | 144 | 198 | 55 | 38 |
| 5 | 125-175 | 5 | 130 | 884 | 655 | 179 | 265 | 65 | 41 |
| 10 | 150-190 | 6 | 136 | 1105 | 742 | 195 | 310 | 85 | 50 |

# Handkettingtakel — Yalelift 360 — Manual Chain Hoist




## EXPERIENCE THE ADVANTAGE OF 360°

Hand chain hoist -Handkettingtakel

WLL 500 - 10000 kg

Areas of operation as well as operator conditions have been improved far beyond those of a classical hand chain hoist.

Het werkgebied en de omstandigheden voor de gebruiker zijn veel beter dan die van een klassieke handkettingtakel.

**Features:**

- The enclosed robust stamped steel housing protects all internal components even in the toughest conditions.
- The extremely low headroom allows maximum use of the lifting height.
- The revolutionary 360° rotating hand chain guide allows the operator to work from virtually any position, in confined spaces or above the load. The Yalelift can even be operated from the side of the load which also makes it possible to use the hoist for horizontal pulling or tensioning. Due to the additional flexibility, the operator is no longer forced to work in the danger zone near the load.
- The brake system is extremely quiet and guarantees operational safety and improved serviceability due to omission of the vulnerable ratchet pawls. All parts are made of high quality materials, additionally zinc-plated or yellow-chromated to increase corrosion prevention.
- Chain guide and gearbox are almost totally enclosed. Even under the toughest conditions the internal gearbox remains protected.
- The hardened load sheave with four precision machined pockets ensures accurate movement of the load chain.
- The surface protected zinc-plated alloy steel load chains fulfil all requirements of current national and international standards and regulations. They are optimally matched to the load sprocket and ensure safe and long-lasting operation of the unit.
- Forged load and suspension hooks that yield under overoad instead of breaking, are made of high tensile steel. The hooks are fitted with robust safety latches and rotate 360°.

Options:

- Adjustable overload protection device.
- Chain container
- Corrosion resistant version
- Instelbare overbelastingsbeveiliging
- Kettingcontainer
- Corrosiebestendige versie

**Kenmerken:**

- De gesloten robuuste behuizing van gestanst staal beschermt alle interne componenten, zelfs onder de zwaarste omstandigheden.
- De extreem lage bouwhoogte maakt een maximale benutting van de hefhoogte mogelijk.
- Dankzij de revolutionaire 360° draaibare handkettinggeleider kan de operator vanuit vrijwel elke positie werken, in krappe ruimtes of boven de last. De Yalelift kan zelfs vanaf de zijkant van de last worden bediend, wat het ook mogelijk maakt om de takel te gebruiken voor horizontaal trekken of spannen. Door de extra flexibiliteit hoeft de operator niet langer in de gevarenzone bij de last te werken.
- Het remsysteem is extreem stil en garandeert operationele veiligheid en verbeterde onderhoudsvriendelijkheid door het weglaten van de kwetsbare ratelpallen. Alle onderdelen zijn gemaakt van hoogwaardige materialen en bovendien verzinkt of geel verchroomd om corrosie te voorkomen. Kettinggeleider en tandwielkast zijn bijna volledig ingekapseld. Zelfs onder de zwaarste omstandigheden blijft de interne tandwielkast beschermd.
- De geharde lastschijf met vier precisiegeslepen groeven zorgt voor een nauwkeurige beweging van de lastketting.
- De oppervlaktebeschermde, verzinkte, gelegeerde stalen lastkettingen voldoen aan alle eisen van de huidige nationale en internationale normen en voorschriften. Ze zijn optimaal afgestemd op het lasttandwiel en zorgen voor een veilige en langdurige werking van de eenheid.
- Gesmede last- en ophanghaken die meegeven bij overbelasting in plaats van te breken, zijn gemaakt van staal met een hoge treksterkte. De haken zijn voorzien van robuuste veiligheidssloten en kunnen 360° draaien.

Easy modification from Yalelift 360 to Yalelift IT is possible.
Eenvoudige modificatie van Yalelift360 naar Yalelift IT is mogelijk.

Ex

On request: new Atex catalogue in PDF format.
Op aanvraag: nieuwe Atex-catalogus in PDF-formaat.

Hand chain hoist, 20 t
WLL 20000 kg
In spite of its high capacity, the Yalelift 360 20 t features a compact design.
Features

- All components are made of high quality materials, some components are zinc-plated or yellow-chromated for added corrosion protection. This ensures that also heaviest loads are held reliably.
- The enclosed robust stamped steel body resists in the toughest conditions and allows outside operation.
- The hardened load sheave with five precision machined pockets ensures accurate movement of the load chain.
- The low headroom (hook-to-hook dimension 1065 mm) allows maximum use of the lifting height.
- The Yale*lift 360* 20 t is equipped with six chain falls only which results in higher speed and lower weight.

Options :

- ∇ Adjustable overload protection device.
- ∇ Chain container
- ∇ Corrosion resistant version

Handkettingtakel, 20 t
WLL 20000 kg
Ondanks de hoge capaciteit heeft de Yalelift 360 20 t een compact ontwerp.
Kenmerken

- Alle onderdelen zijn gemaakt van hoogwaardige materialen, sommige onderdelen zijn verzinkt of geel verchroomd voor extra corrosiebescherming. Dit zorgt ervoor dat ook de zwaarste ladingen betrouwbaar worden vastgehouden.
- De gesloten robuuste behuizing van gestanst staal is bestand tegen de zwaarste omstandigheden en kan buiten worden gebruikt.
- De geharde lastschijf met vijf precisiebewerkte pockets zorgt voor een nauwkeurige beweging van de lastketting.
- Dankzij de lage bouwhoogte (haak-haakmaat 1065 mm) kan de hefhoogte maximaal worden benut.
- De Yalelift 360 20 t is alleen uitgerust met zes kettingschijven, wat resulteert in een hogere snelheid en een lager gewicht.

Opties :
- Instelbare overbelastingsbeveiliging.
- Kettingopvangbak
- Corrosiebestendige versie




UPGRADE

**SIMPLE & FLEXIBLE**

**FROM Yale*lift 360* TO Yale*lift* IT**

## Specs. Yale*lift360*

| Model | Art.-Nr. | WLL kg | Q chain falls ketting parten | Chain-ketting dimensions Ø x p - Class mm | hand chain Transit /m Lift in mm | Handforce Handkracht daN | Weight/Gewicht standard lift (1.5 m) kg |
|---|---|---|---|---|---|---|---|
| YL 500 | N04700109 | 500 | 1 | 5 x 15 - T | 33 | 21 | 9 |
| YL 1000 | N04700110 | 1000 | 1 | 6 x 18 - T | 20 | 30 | 13 |
| YL 2000 | N04700111 | 2000 | 1 | 8 x 24 - T | 14 | 32 | 21 |
| YL 3000 | N04700112 | 3000 | 1 | 10 x 30 - V | 12 | 38 | 34 |
| YL 5000 | N04700113 | 5000 | 2 | 10 x 30 - T | 6 | 34 | 48 |
| YL 10000 | N04700075 | 10000 | 3 | 10 x 30 - V | 4 | 44 | 71 |
| YL 20000 | N04700077 | 20000 | 6 | 10 x 30 - V | 2 | 2 x 44 | 196 |







Dimensions / Afmetingen

| Model | YL 500 | YL 1000 | YL 2000 | YL 3000 | YL 5000 | YL 10000 | YL 20000 |
|---|---|---|---|---|---|---|---|
| A min., mm | 300 | 335 | 395 | 520 | 654 | 825 | 1065 |
| B, mm | 17 | 22 | 30 | 38 | 45 | 68 | 85 |
| C, mm | 24 | 29 | 35 | 40 | 47 | 68 | 64 |
| D, mm | 133 | 156 | 182 | 220 | 220 | 220 | 303 |
| E, mm | 148 | 175 | 203 | 250 | 250 | 383 | 555 |
| F, mm | 148 | 167 | 194 | 219 | 219 | 219 | 250 |
| G, mm | 139 | 164 | 192 | 225 | 242 | 326 | 391 |
| H, mm | 206 | 242 | 283 | 335 | 352 | 436 | 501 |
| I, mm | 24 | 24 | 31 | 34 | 21 | 136 | – |
| K, mm | 61 | 70 | 83 | 95 | 95 | 95 | 396 |
| L, mm | 87 | 97 | 111 | 124 | 124 | 124 | 125 |
| M, mm | 110 | 125 | 156 | 178 | 285 | 401 | 471 |
| N, mm | 14 | 19 | 22 | 30 | 37 | 50 | 56 |

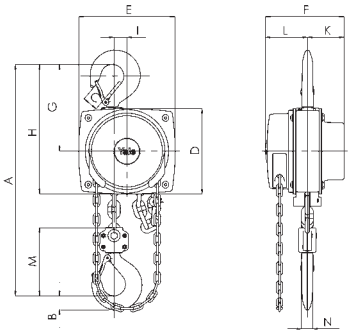


Yale*lift 360*, 500 - 3000 kg, single fall / Enkel part

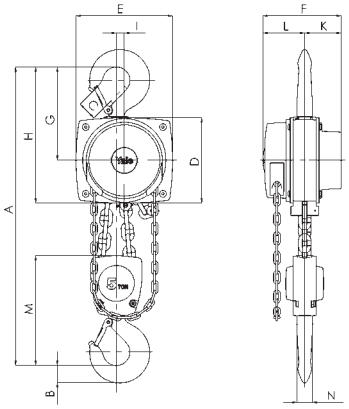


Yale*lift 360*, 5000 kg, double fall / 2 kettingparten

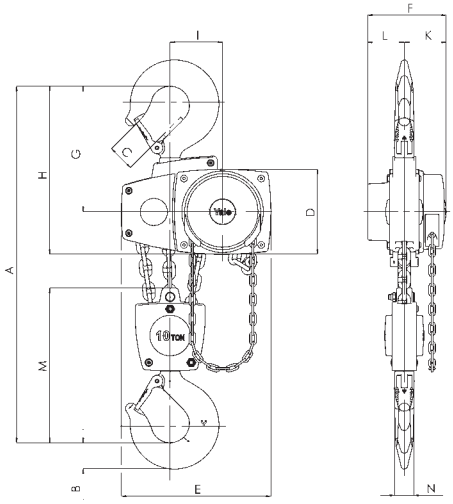


Yale*lift 360*, 10000 kg, three falls / 3 kettingparten

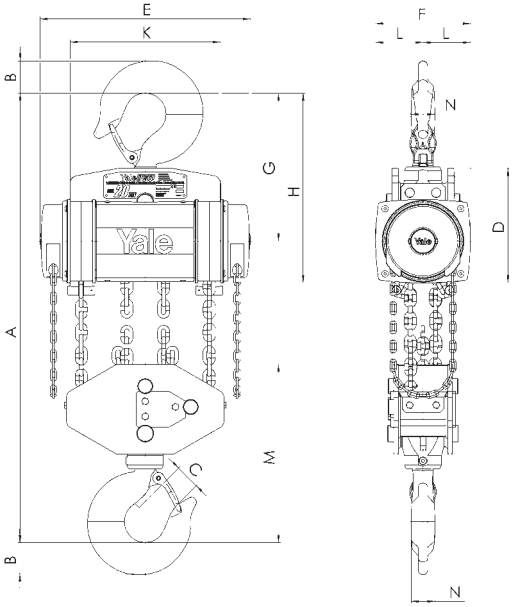


Yale*lift 360*, 20000 kg, six falls / 6 kettingparten




www.DECORLUX.be
HIJSTECHNIEK
TECHNIQUE LEVAGE
HEBETECHNIK
LIFTING TECHNICS

# Rateltakels
# Lever Hoists



Premium Rateltakel
Premium Lever Hoist
## Type Delta RLH



Rateltakel
Lever Hoist
## Type Delta YLH



Rateltakel
Lever Hoist
## Type Delta ALH



Premium Sjortakel
Premium Lever Hoist with Lashing Hooks
## Type Delta RLH



Rateltakel
Lever Hoist
## YaleERGO 360®

# Type Delta RLH

## Premium Rateltakel / Premium Lever Hoist



## Eigenschappen

- Onderhoudsvriendelijk ontwerp. Rem en transmissie zijn eenvoudig toegankelijk.
- De transmissie wordt ondersteund door hoogwaardige lagers.
- Fijn geslepen assen, nestenwiel en tandwielen zorgen voor een soepele werking.
- Dubbele behuizing biedt bescherming tegen stof en water.
- Robuuste behuizing is bestand tegen externe schokken zonder schade aan de uitlijning van de lagers.
- Ergonomische hendel met rubberen handvat.
- Geoptimaliseerde lastketting geleidingssysteem.
- Meetpunten op de haken.

Premium eigenschappen:

- Verbeterde vrijloopmodus (trek het handwiel uit).
- Geen minimale belasting nodig om het ratelmechanisme te activeren.
- Verbeterde corrosiebestendige, gesloten lagers.
- Compacte hendel reduceert het gewicht geschikt voor gebruik in kleine ruimten.
- Gietijzeren handwiel zorgt voor betere gebruikerservaring.Voldoet aan de Machinerichtlijn 2006/42/EG. Geleverd met testcertificaat, CE-conformiteitsverklaring en gebruiksaanwijzing.

## Features

- Maintenance friendly design. Brake and transmission are easy to access.
- The transmission is supported by high-quality bearings.
- Precision machined shafts, chain sprocket and gears ensure smooth operation.
- High strength double casing provides protection against dust and water.
- Robust housing endures external shock without damage to the bearing alignment.
- Ergonomic lever with rubber sleeve.
- Optimised load chain guidance system.
- Measurement points on the hooks.

Premium features:

- Enhanced free spooling mode (pull out hand wheel).
- No minimum preload required to activate ratchet mechanism.
- Enhanced corrosion resistant, caged bearings.
- Compact lever reduces weight and enables narrow space operation.
- Cast steel hand wheel provides better performance.
- Complies with the Machinery Directive 2006/42/EC. Supplied with test certificate, CE declaration of conformity and operating instructions.

**(**) Standaardhijshoogte / Standard Lifting Height**
(1.5) = 1.5m
(3) = 3m

| Specificaties / Specifications | | | | | | | | |
|---|---|---|---|---|---|---|---|---|
| Artikelnummer | Capaciteit | Hijsketting | Parten | Test load | Inspanning voor max lading | Hendel draaiingen voor 1m hijsen | Netto gewicht | Extra gewicht |
| Article code | Capacity | Load chain | Chain falls | Test load | Effort for max load | Lever turns for 1m lift | Net weight | Extra weight |
| | ton | Øxmm | | kN | N | | kg * | kg/m ** |
| DR.0.055080(**) | 0.8 | 6 x 18 | 1 | 9.8 | 180 | 54 | 5.6 | 0.9 |
| DR.0.055160(**) | 1.6 | 8 x 24 | 1 | 19.6 | 355 | 63 | 8.5 | 1.5 |
| DR.0.055320(**) | 3.2 | 10 x 30 | 1 | 39.2 | 335 | 60 | 16.2 | 2.3 |
| DR.0.055630(**) | 6.3 | 10 x 30 | 2 | 77.2 | 350 | 119 | 21.9 | 4.6 |
| DR.0.055900(**) | 9 | 10 x 30 | 3 | 110.3 | 323 | 179 | 32.1 | 6.9 |

* zonder lastketting / without loadchain ** per meter hijshoogte / per meter hoisting height

| Specificaties / Specifications | |
|---|---|
| Haken / Hooks | Gesmede stalen haken met gegoten klep / Drop-forged steel hooks with cast latch |
| Lastketting / Load chain | Gegalvaniseerde lastketting volgens EN 818-7-T / Galvanized load chain according to EN 818-7-T |
| Bedrijfstemperatuur / Operating temperature | -10°C - +60°C |
| ATEX zone / ATEX zone | niet geschikt / not suitable |
| Ladingtype / Load type | Alleen voor goederen, niet geschikt om personen te hijsen / Goods, may not be used to lift people |

| Beveiliging / Protection | |
|---|---|
| Overlastbeveiliging / Overload protection | Beschikbaar met slipkoppeling overlastbeveiliging / Available with slip clutch overload protection |
| Rem / Brake | Premium eigenschap: Automatische veiligheidsrem met dubbele pallen. Stalen remschijf met gesinterde remblokken voor een langere levensduur. / Premium feature: Automatic safety load brake with twin pawls. Extremely durable steel brake disc with sintered brake pads. |

# Premium Rateltakel / Premium Lever Hoist

## Beschikbaar met slipkoppeling overlastbeveiliging / Available with slip clutch Overload Protection

**(**) Standaardhijshoogte / Standard Lifting Height**
(1.5) = 1.5m
(3) = 3m

| Artikelnummer<br>Article code | Capaciteit<br>Capacity<br>ton |
|---|---|
| DR.0.052080(**).OP | 0.8 |
| DR.0.052160(**).OP | 1.6 |
| DR.0.052320(**).OP | 3.2 |
| DR.0.052630(**).OP | 6.3 |
| DR.0.052900(**).OP | 9 |

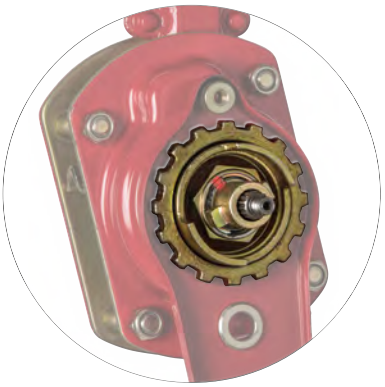



0.8 ton | 1.6 ton | 3.2 ton | 6.3 ton | 9 ton

# Premium VS Standaard

Gesloten cilinderrollagers voor intensief gebruik. /
Closed heavy-duty cylindrical roller bearings.





Stalen remschijf met gesinterde remblokken voor een langere levensduur en betere prestaties. /
Extremely durable steel brake disc with sintered brake pads offers high performance.



Standaard remschijf. /
Standard brake disc.

Hoogwaardig gegoten veiligheidskleppen. /
High-quality cast safety latches.

## Premium



Verbeterde vrijloopmodus (trek het handwiel uit). /Enhanced free spooling mode (pull out hand wheel).

Verbeterd handwiel. /
Improved hand wheel.

Geen minimale belasting nodig om het ratelmechanisme te activeren. /
No minimum preload required to activate ratchet mechanism.

Compacte hendel. /
Compact lever.

Beschikbaar met slipkoppeling overlastbeveiliging. /Available with slip clutch overload protection.



# Type Delta YLH

Rateltakel / Lever Hoist




## Eigenschappen

- Onderhoudsvriendelijk ontwerp. Rem en transmissie zijn eenvoudig toegankelijk.
- De transmissie wordt ondersteund door hoogwaardige lagers.
- Fijn geslepen assen, nestenwiel en tandwielen zorgen voor een soepele werking.
- Dubbele behuizing biedt bescherming tegen stof en water.
- Robuuste behuizing is bestand tegen externe schokken zonder schade aan de uitlijning van de lagers.
- Ergonomische hendel met rubberen handvat.
- Geoptimaliseerde lastketting geleidingssysteem.
- Vrijloop modus.
- Meetpunten op de haken.
- Voldoet aan de Machinerichtlijn 2006/42/EG. Geleverd met testcertificaat, CE-conformiteitsverklaring en gebruiksaanwijzing.

## Features

- Maintenance friendly design. Brake and transmission are easy to access.
- The transmission is supported by high-quality bearings.
- Precision machined shafts, chain sprocket and gears ensure smooth operation.
- High strength double casing provides protection against dust and water.
- Robust housing endures external shock without damage to the bearing alignment.
- Ergonomic lever with rubber sleeve.
- Optimised load chain guidance system.
- Free spooling mode.
- Measurement points on the hooks.
- Complies with the Machinery Directive 2006/42/EC. Supplied with test certificate, CE declaration of conformity and operating instructions.

**(**) Standaardhijshoogte / Standard Lifting Height**
(1.5) = 1.5m
(3) = 3m

| Specificaties / Specifications | | | | | | | | |
|---|---|---|---|---|---|---|---|---|
| Artikelnummer | Capaciteit | Hijsketting | Parten | Test load | Inspanning voor max lading | Hendel draaiingen voor 1m hijsen | Netto gewicht | Extra gewicht |
| Article code | Capacity | Load chain | Chain falls | Test load | Effort for max load | Lever turns for 1m lift | Net weight | Extra weight |
| | ton | Øxmm | | kN | N | | kg * | kg/m ** |
| DY.0.055075(**) | 0.75 | 6 x 18 | 1 | 9.2 | 140 | 51 | 5.1 | 0.9 |
| DY.0.055150(**) | 1.5 | 8 x 24 | 1 | 18.4 | 240 | 47 | 8.9 | 1.5 |
| DY.0.055300(**) | 3 | 10 x 30 | 1 | 36.8 | 320 | 60 | 15.4 | 2.3 |
| DY.0.055600(**) | 6 | 10 x 30 | 2 | 73.5 | 340 | 120 | 23.4 | 4.6 |
| DY.0.055900(**) | 9 | 10 x 30 | 3 | 110.3 | 360 | 179 | 31.3 | 6.9 |

* zonder lastketting / without loadchain ** per meter hijshoogte / per meter hoisting height

| Specificaties / Specifications | |
|---|---|
| Haken / Hooks | Gesmede stalen haken met gegoten klep / Drop-forged steel hooks with cast latch |
| Lastketting / Load chain | Gegalvaniseerde lastketting volgens EN 818-7-T / Galvanized load chain according to EN 818-7-T |
| Bedrijfstemperatuur / Operating temperature | -10°C - +60°C |
| ATEX zone / ATEX zone | niet geschikt / not suitable |
| Ladingtype / Load type | Alleen voor goederen, niet geschikt om personen te hijsen / Goods, may not be used to lift people |

| Beveiliging / Protection | |
|---|---|
| Overlastbeveiliging / Overload protection | Zonder overlastbeveiliging / No overload protection |
| Rem / Brake | Automatische veiligheidsrem met dubbele remschrijven en pallen. / Automatic safety load brake with twin friction discs and pawls. |

# Type Delta ALH

Rateltakel / Lever Hoist

## Eigenschappen

» Extreem lichte en compacte aluminium behuizing.
» 250kg en 500kg geleverd met draagtas.
» Onderhoudsvriendelijk ontwerp. Rem en transmissie zijn eenvoudig toegankelijk.
» Dubbele behuizing biedt bescherming tegen stof en water.
» Ergonomische hendel met rubberen handvat.
» Vrijloop modus.
» Meetpunten op de haken.
» Voldoet aan de Machinerichtlijn 2006/42/EG. Geleverd met testcertificaat,

CE-conformiteitsverklaring en gebruiksaanwijzing.

## Features

» Extremely lightweight and compact aluminium housing.
» 250kg and 500kg supplied with carrying bag.
» Maintenance friendly design. Brake and transmission are easy to access.
» Double casing provides protection against dust and water.
» Ergonomic lever with rubber sleeve.
» Free spooling mode.
» Measurement points on the hooks.
» Complies with the Machinery Directive 2006/42/EC. Supplied with test certificate, CE declaration of conformity and operating instructions.



250kg - 500kg



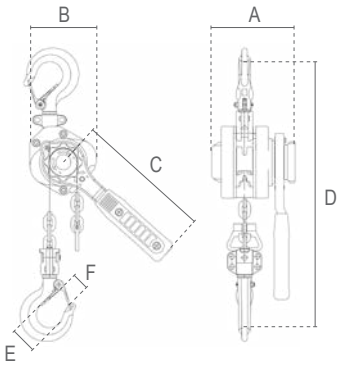


**(**) Standaardhijshoogte / Standard LiftingHeight**
**(1.5) = 1.5m**
**(3) = 3m**

| Specificaties / Specifications | | | | | | | | |
|---|---|---|---|---|---|---|---|---|
| Artikelnummer | Capaciteit | Hijsketting | Parten | Test load | Inspanning voor max lading | Hendel draaiingen voor 1m hijsen | Netto gewicht | Extra gewicht |
| Article code | Capacity | Load chain | Chain falls | Test load | Effort for max load | Lever turns for 1m lift | Net weight | Extra weight |
| | ton | Øxmm | | kN | N | | kg * | kg/m ** |
| DC.0.078025(**) | 0.25 | 4 x 12 | 1 | 3.1 | 206 | 23 | 1.3 | 0.4 |
| DC.0.078050(**) | 0.5 | 5 x 15 | 1 | 6.1 | 255 | 36 | 2.1 | 0.6 |
| DC.0.078075(**) | 0.75 | 5.6 x 15.7 | 1 | 9.2 | 303 | 35 | 3.8 | 0.7 |
| DC.0.078150(**) | 1.5 | 7.1 x 19.9 | 1 | 18.4 | 362 | 46 | 5.2 | 1.2 |

* zonder lastketting / without loadchain ** per meter hijshoogte / per meter hoisting height

| Specificaties / Specifications | |
|---|---|
| Haken / Hooks | Gesmede stalen haken met gegoten klep / Drop-forged steel hooks with cast latch |
| Lastketting / Load chain | Gegalvaniseerde lastketting volgens EN 818-7-T / Galvanized load chain according to EN 818-7-T |
| Bedrijfstemperatuur / Operating temperature | -10°C - +60°C |
| ATEX zone / ATEX zone | niet geschikt / not suitable |
| Ladingtype / Load type | Alleen voor goederen, niet geschikt om personen te hijsen / Goods, may not be used to lift people |

| Beveiliging / Protection | |
|---|---|
| Overlastbeveiliging / Overload protection | Zonder overlastbeveiliging / No overload protection |
| Rem / Brake | Automatische veiligheidsrem met dubbele remschrijven en pallen. / Automatic safety load brake with twin friction discs and pawls. |

| Afmetingen / Dimensions | | | | | | |
|---|---|---|---|---|---|---|
| Capaciteit / Capacity ton | A | B | C | D | E | F |
| 0.25 | 95 | 80 | 160 | 230 | 34 | 22 |
| 0.5 | 100 | 93 | 160 | 265 | 34 | 22 |
| 0.75 | 126 | 110 | 208 | 315 | 40 | 26 |
| 1.5 | 142 | 133 | 238 | 340 | 45 | 31 |

# Type Delta MLH-OH

## Premium Sjortakel / Premium Lever Hoist with Lashing Hooks

CE

## Eigenschappen

- » Met scheepswerf haken.
- » Onderhoudsvriendelijk ontwerp. Rem en transmissie zijn eenvoudig toegankelijk.
- » De transmissie wordt ondersteund door hoogwaardige lagers.
- » Fijn geslepen assen, nestenwiel en tandwielen zorgen voor een soepele werking.
- » Dubbele behuizing biedt bescherming tegen stof en water.
- » Robuuste behuizing is bestand tegen externe schokken zonder schade aan de uitlijning van de lagers.
- » Ergonomische hendel met rubberen handvat.
- » Geoptimaliseerde lastketting geleidingssysteem.

Premium eigenschappen:

- » Verbeterde vrijloopmodus (trek het handwiel uit).
- » Geen minimale belasting nodig om het ratelmechanisme te activeren.
- » Verbeterde corrosiebestendige, gesloten lagers.
- » Compacte hendel reduceert het gewicht geschikt voor gebruik in kleine ruimten.
- » Gietijzeren handwiel zorgt voor betere gebruikerservaring.
- » Voldoet aan de Machinerichtlijn 2006/42/EG. Geleverd met testcertificaat, CE-conformiteitsverklaring en gebruiksaanwijzing.




## Features

- » With lashing hooks.
- » Maintenance friendly design. Brake and transmission are easy to access.
- » The transmission is supported by high-quality bearings.
- » Precision machined shafts, chain sprocket and gears ensure smooth operation.
- » High strength double casing provides protection against dust and water.
- » Robust housing endures external shock without damage to the bearing alignment.
- » Ergonomic lever with rubber sleeve.
- » Optimised load chain guidance system.

Premium features:

- » Enhanced free spooling mode (pull out hand wheel).
- » No minimum preload required to activate ratchet mechanism.
- » Enhanced corrosion resistant, caged bearings.
- » Compact lever reduces weight and enables narrow space operation.
- » Cast steel hand wheel provides better performance.
- » Complies with the Machinery Directive 2006/42/EC. Supplied with test certificate, CE declaration of conformity and operating instructions.

**(**) Standaardhijshoogte / Standard LiftingHeight**
**(1.5) = 1.5m**
**(3) = 3m**

| Specificaties / Specifications | | | | | | |
|---|---|---|---|---|---|---|
| Artikelnummer | Capaciteit | Hijsketting | Parten | Hendel draaiingen voor 1m sjoren | Netto gewicht | Extra gewicht |
| Article code | Capacity | Load chain | Chain falls | Lever turns for 1m lashing | Net weight | Extra weight |
| | LC | Øxmm | | | kg * | kg/m ** |
| DR.0.074150(**) | 30kN | 8 x 24 | 1 | 63 | 8.5 | 1.5 |
| DR.0.074300(**) | 60kN | 10 x 30 | 1 | 60 | 16.2 | 2.3 |

* zonder lastketting / without loadchain ** per meter hijshoogte / per meter hoisting height

| Specificaties / Specifications | |
|---|---|
| Haken / Hooks | Gesmede stalen haken / Drop-forged steel hooks |
| Lastketting / Load chain | Gegalvaniseerde lastketting volgens EN 818-7-T / Galvanized load chain according to EN 818-7-T |
| Bedrijfstemperatuur / Operating temperature | -10°C - +60°C |
| ATEX zone / ATEX zone | niet geschikt / not suitable |
| Ladingtype / Load type | Alleen voor goederen, niet geschikt om personen te hijsen / Goods, may not be used to lift people |

| Beveiliging / Protection | |
|---|---|
| Overlastbeveiliging / Overload protection | Zonder overlastbeveiliging / No overload protection |
| Rem / Brake | Premium eigenschap: Automatische veiligheidsrem met dubbele pallen. Stalen remschijf met gesinterde remblokken voor een langere levensduur. / Premium feature: Automatic safety load brake with twin pawls. Extremely durable steel brake disc with sintered brake pads. |

# Afmetingen / Dimensions

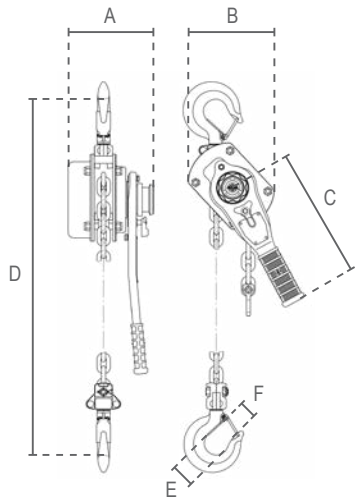


0.75 - 3 ton

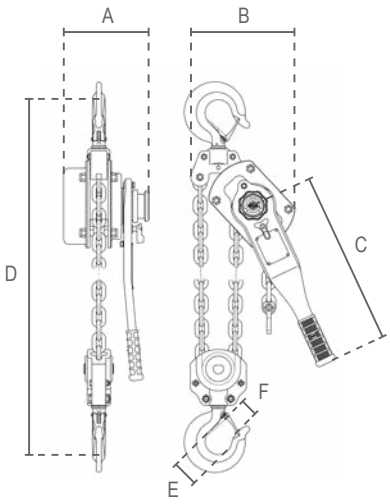


6 ton

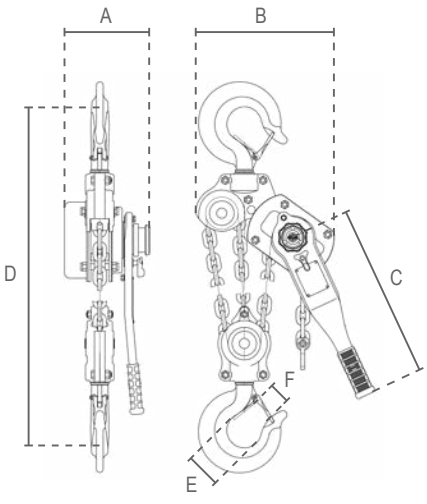


9 ton

## Type Delta RLH / RLH-OH

| Afmetingen / Dimensions | | | | | | | |
|---|---|---|---|---|---|---|---|
| Capaciteit / Capacity ton | | A | B | C | D | E | F |
| 0.8 | | 160 | 133 | 250 | 320 | 38 | 26 |
| 1.6 | 30kN | 182 | 157 | 270 | 365 | 48 | 29 |
| 3.2 | 60kN | 208 | 210 | 430 | 490 | 58 | 39 |
| 6.3 | | 208 | 253 | 430 | 583 | 65 | 43 |
| 9 | | 208 | 338 | 430 | 830 | 85 | 58 |



## Type Delta YLH

| Afmetingen / Dimensions | | | | | | |
|---|---|---|---|---|---|---|
| Capaciteit / Capacity ton | A | B | C | D | E | F |
| 0.75 | 148 | 135 | 290 | 320 | 37 | 26 |
| 1.5 | 176 | 162 | 420 | 380 | 45 | 33 |
| 3 | 195 | 211 | 420 | 480 | 50 | 38 |
| 6 | 195 | 254 | 420 | 620 | 64 | 48 |
| 9 | 195 | 319 | 420 | 700 | 85 | 50 |





# Ratchet lever hoist

## Capacity 750 - 9000 kg

Redefining lever-operated hoists, the YaleERGO 360® features the revolutionary crank handle that allows for efficient operation in both lifting and pulling applications. Ergonomically designed for increased safety, the patented YaleERGO 360® lets the operator work up to 12 times faster and with as much as 30 % less pull force than with conventional ratchet lever tools.

De YaleERGO 360® is een nieuwe definitie van hefgereedschap en is uitgerust met de revolutionaire slinger die een efficiënte bediening mogelijk maakt bij zowel heffen als trekken. Ergonomisch ontworpen voor meer veiligheid, laat de gepatenteerde YaleERGO 360® de gebruiker tot 12 keer sneller werken en met maar liefst 30% minder trekkracht dan met conventionele ratelhefboomgereedschappen.

**Features:**

- The lightweight, high-strength aluminium housing with powder coating and high-quality bearings offer a long service life even with intensive use and rough operating conditions.
- The hand lever with integrated snap crank ensures ideal power transmission and enables a 360° working range. This increases productivity and reduces the risk of injury.
- Display of the operating direction or free chaining in the viewing window of the hand lever.
- The covered load pressure brake remains free of dirt and moisture, which enables precise load positioning.
- Standard free chaining device to quickly attach the load or to pull the chain through the hoist in both directions.
- Chain guide and stripper are made of robust cast iron and zinc plated to protect against corrosion.
- Alloyed steel link chain with zinc-plated resp. yellow chromated finish, in accordance with national and international standards and regulations.
- Rotatable, forged top and load hooks and casted safety latches provide reliable and safe load suspension. The screwed top hook cross bars and bottom blocks are allowed for easy maintenance.

**Kenmerken:**

- De lichte, zeer sterke aluminium behuizing met poedercoating en hoogwaardige lagers bieden een lange levensduur, zelfs bij intensief gebruik en ruwe gebruiksomstandigheden.
- De hendel met geïntegreerde klikhendel zorgt voor een ideale krachtoverbrenging en maakt een werkbereik van 360° mogelijk. Dit verhoogt de productiviteit en vermindert het risico op letsel.
- Weergave van de werkrichting of vrije ketting in het kijkvenster van de handhendel.
- De afgedekte lastdrukrem blijft vrij van vuil en vocht, waardoor de last nauwkeurig kan worden gepositioneerd.
- Standaard vrije kettinggeleider om de last snel vast te zetten of om de ketting in beide richtingen door de takel te trekken.
- Kettinggeleider en stripper zijn gemaakt van robuust gietijzer en verzinkt ter bescherming tegen corrosie.
- Gelegerde stalen schakelketting met verzinkte resp. geel verchroomde afwerking, in overeenstemming met nationale en internationale normen en voorschriften.
- Draaibare, gesmede boven- en lasthaken en gegoten veiligheidssloten zorgen voor een betrouwbare en veilige ophanging van de lading. De geschroefde dwarsstangen van de tophaak en de bodemblokken zijn onderhoudsvriendelijk.

**Options:**

- All Yale*ERGO 360®* units can be equipped with an overload protection device in the form of a slip clutch which is factory preset to approx. 25 % ± 15 % overload.
- Shipyard hooks available for 1500 kg and 3000 kg units.

**Opties:**

- Alle YaleERGO 360® units kunnen worden uitgerust met een overbelastingsbeveiliging in de vorm van een slipkoppeling die in de fabriek is ingesteld op ongeveer 25% ± 15% overbelasting.
- Scheepswerfhaken beschikbaar voor eenheden van 1500 kg en 3000 kg.



PATENTED

## HAND LEVER WITH RETRACTABLE CRANK
DESIGNED FOR OPTIMAL EFFICIENCY & SAFETY

## ZWENGEL MET INKLAPBARE HANDGREEP
VOOR OPTIMALE EFFICIËNTIE & VEILIGHEID ONTWORPEN

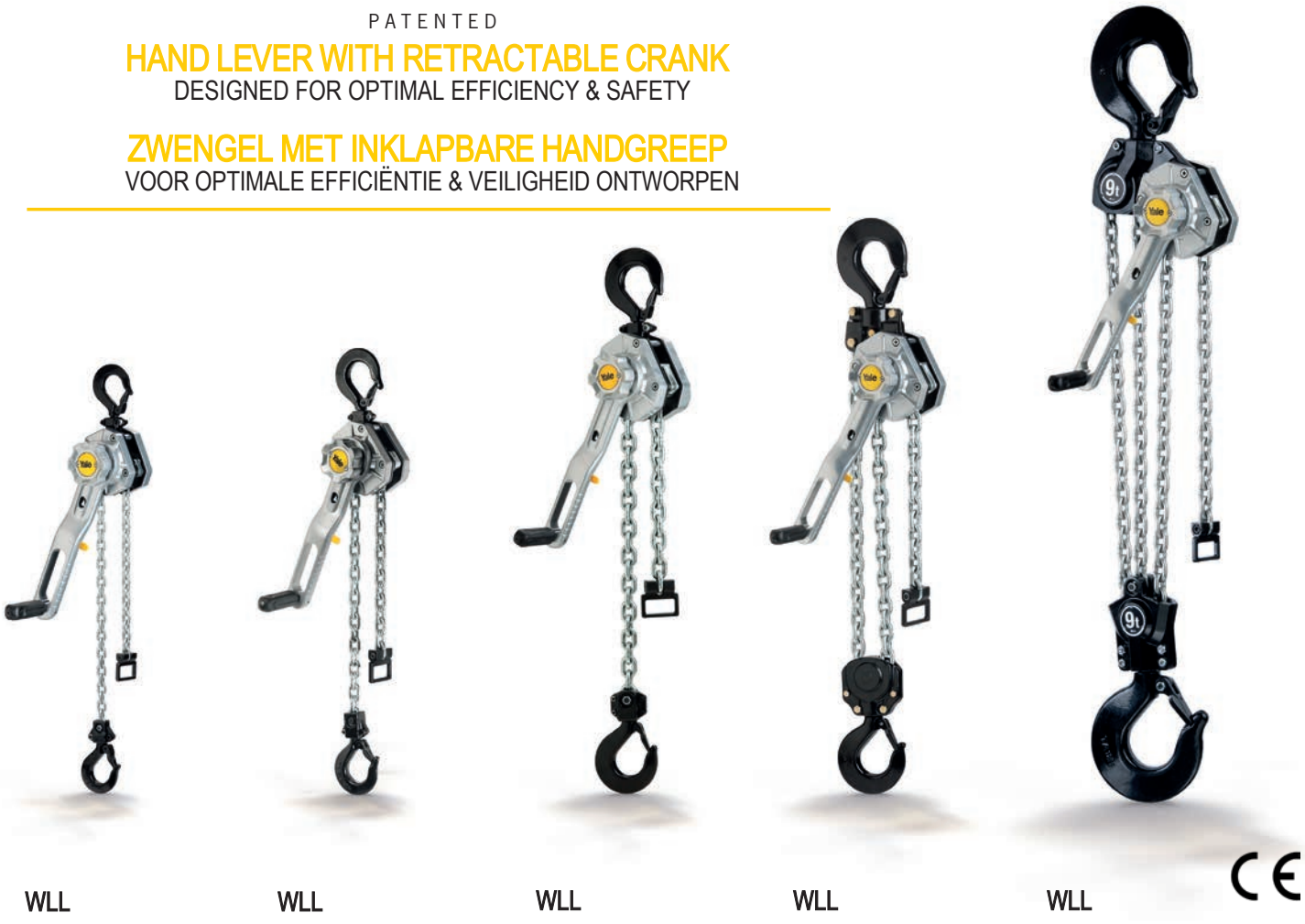

| WLL 750 kg | WLL 1500 kg | WLL 3000 kg | WLL 6000 kg | WLL 9000 kg |
|---|---|---|---|---|
| Spacing between hooks<br>Afstand tussen haken<br>(A min.) 320 mm | Spacing between hooks<br>Afstand tussen haken<br>(A min.) 375 mm | Spacing between hooks<br>Afstand tussen haken<br>(A min.) 445 mm | Spacing between hooks<br>Afstand tussen haken<br>(A min.) 563 mm | Spacing between hooks<br>Afstand tussen haken<br>(A min.) 695 mm |
| Handle pull at WLL<br>Handtrekkracht bij WLL<br>20 daN | Handle pull at WLL<br>Handtrekkracht bij WLL<br>24daN | Handle pull at WLL<br>Handtrekkracht bij WLL<br>35daN | Handle pull at WLL<br>Handtrekkracht bij WLL<br>37daN | Handle pull at WLL<br>Handtrekkracht bij WLL<br>41daN |
| Weight/Gewicht: 6.7 kg | Weight/Gewicht: 9.6 kg | Weight/Gewicht: 17.2 kg | Weight/Gewicht: 28.9 kg | Weight/Gewicht: 49.5 kg |

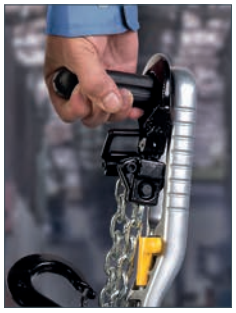

When folded out, the lever handle can serve as a carry-ing grip for easy transport. Simply attach the end stop to the hook and slip the hook onto the crank handle.

Uitgeklapt kan de zwengel dienen als draaghandvat voor gemakkelijk transport. Bevestig gewoon de eindstop aan de haak en schuif de haak op de zwengel.



Unique body design allows the Yale ERGO 360 to lay flat to minimize tipping or slipping during operation.

Dankzij het unieke ontwerp van de behuizing ligt de Yale ERGO 360 plat, zodat hij tijdens het gebruik niet kantelt of wegglijdt.

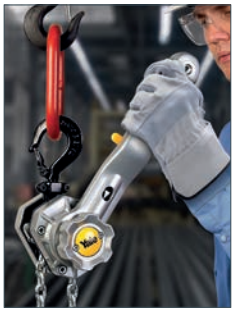

Yale *ERGO 360* in conventional use.

Yale ERGO 360 in conventioneel gebruik.



Yale *ERGO 360* in use of the extended crank handle.

Yale ERGO 360 met de verlengde zwengel.

## DISTINCTIVE CLICKING SOUND

ENSURES THE HANDLE IS LOCKED INTO POSITION

To return handle to upright position, simply pull the handle outward and snap into place inside the lever.

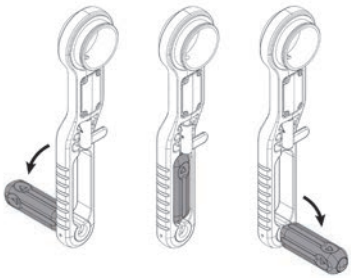

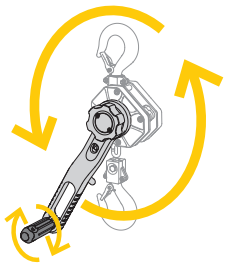

CE

## The hand lever with integrated crank

- 360° rotation increases efficiency, allowing operators to work up to 12 times faster than with a conventional ratchet lever hoist.
- Requires 30% less pull force to operate.
- Easy and effective operation from any angle with handle that folds down and locks into position on either side of the lever.
- Design keeps the operator's body aligned with the load chain, reducing the risk of the twist effect – when a hoist twists around the chain.
  No need to use a second hand to stabilize the hoist.
- Operator can securely grip the grooved, no-slip handle.
- Crank handle made of durable polyamide with a heavy-duty steel core for rugged use.

- 360° rotatie verhoogt de efficiëntie, waardoor bestuurders tot 12 keer sneller kunnen werken dan met een conventionele takel met ratelhendel.
- Vereist 30% minder trekkracht om te bedienen.
- Eenvoudige en effectieve bediening vanuit elke hoek met de handgreep die neerklapt en vergrendelt aan beide zijden van de hendel.
- Het ontwerp houdt het lichaam van de gebruiker op één lijn met de lastketting, waardoor het risico van het verdraaiingseffect - wanneer een takel rond de ketting verdraait - kleiner wordt.
- Er is geen tweede hand nodig om de takel te stabiliseren.
  De operator kan de gegroefde, slipvrije handgreep stevig vastpakken.
- Zwengel gemaakt van duurzaam polyamide met een zware stalen kern voor robuust gebruik.



## Convenient directional indicator

Easy-to-use, highly visible directional indicator window located in the handle clearly shows the operating direction as LIFTING (▲ ), LOWERING (▼ ) or NEUTRAL ( N ).

## Handige richtingsindicator

Het gebruiksvriendelijke, goed zichtbare richtingaanwijzervenster in de handgreep geeft duidelijk de werkrichting aan als LIFTEN (▲ ), DALEN (▼ ) of NEUTRAAL ( N ).

## SAFE & SECURE

SELECTOR LEVER LOCKS IN PLACE TO PREVENT ACCIDENTALLY SWITCHING.

DE SELECTORHENDEL VERGRENDELT OP ZIJN PLAATS OM TE VOORKOMEN DAT DEZE PER ONGELUK WORDT OMGESCHAKELD.

Pull down on the selector lever to unlock it, turn it to the desired direction, and release it into the locking position.

Trek de selectorhendel omlaag om hem te ontgrendelen, draai hem in de gewenste richting en laat hem los in de vergrendelstand.

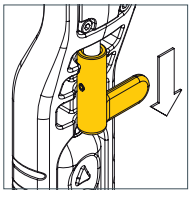

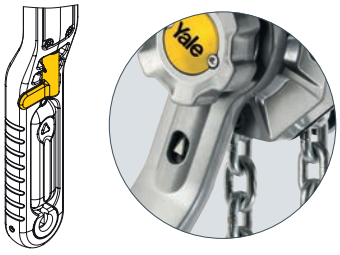


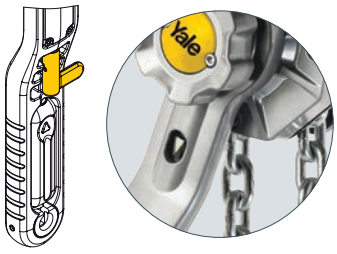


## Simple & smooth free chaining device

Quick positioning of the unloaded chain - even with one-handed operation.
In this operating mode, the chain can be pulled through the unit by hand in both direc-tions in order to attach it more quickly.
The free chaining device is activated by moving (shifting) the lever to the neutral position(N).

Snelle positionering van de onbelaste ketting - zelfs bij bediening met één hand.
In deze gebruiksstand kan de ketting met de hand in beide richtingen door het apparaat worden getrokken om hem sneller te kunnen spannen.
De kettingvrijloop wordt geactiveerd door de hendel in de neutrale stand ( N ) te zetten

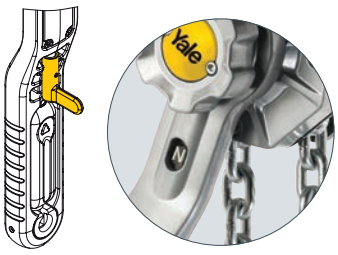

## Specs.Yale*ERGO 360®*

| Model | Art.-No. | WLL kg | Q chain falls ketting parten | Chain-ketting dimensions Ø x p - Class mm | 1 Handle revolution 1 Zwengel rotatie Lift in mm | Handle pull force Handtrekkracht daN-WLL | Handle pull force with crank Handtrekkracht met zwengel daN-WLL | Weight/Gewicht standard lift (1.5 m) kg |
|---|---|---|---|---|---|---|---|---|
| Yale*ERGO 360* 750 | 192028204 | 750 | 1 | 5.6 x 17.1 - T | 27.2 | 21 | 20 | 6.7 |
| Yale*ERGO 360* 1500 | 192028202 | 1500 | 1 | 7.1 x 21 - T | 21.7 | 31 | 24 | 9.6 |
| Yale*ERGO 360* 3000 | 192028553 | 3000 | 1 | 10 x 28 - V | 20.1 | 43 | 35 | 17.2 |
| Yale*ERGO 360* 6000 | 192035451 | 6000 | 2 | 10 x 28 - V | 10.1 | 46 | 37 | 28.9 |
| Yale*ERGO 360* 9000 | 192039362 | 9000 | 3 | 10 x 28 - V | 6.7 | 50 | 41 | 49.5 |

## Dimensions Yale*ERGO 360®*

| Model | Yale*ERGO 360* 750 | Yale*ERGO 360* 1500 | Yale*ERGO 360* 3000 | Yale*ERGO 360* 6000 | Yale*ERGO 360* 9000 |
|---|---|---|---|---|---|
| A min., mm | 320 | 375 | 445 | 563 | 695 |
| B, mm | 20 | 26 | 37 | 45 | 68 |
| C, mm | 27 | 31 | 40 | 47 | 68 |
| D, mm | 18 | 21 | 28 | 35 | 50 |
| E, mm | 327 | 327 | 377 | 377 | 377 |
| F, mm | 300 | 300 | 350 | 350 | 350 |
| G, mm | 40 | 51 | 57 | 71 | 116 |
| H, mm | 81 | 96 | 123 | 162 | 199 |
| J, mm | 121 | 147 | 180 | 233 | 315 |
| K, mm | 56 | 69 | 86 | 86 | 86 |
| L, mm | 105 | 110 | 121 | 121 | 121 |
| M, mm | 161 | 179 | 207 | 207 | 207 |
| N, mm | 30 | 30 | 30 | 30 | 30 |
| O, mm | 120 | 120 | 120 | 120 | 120 |
| P, mm | 257 | 273 | 299 | 299 | 299 |



Option:
Shipyard hooks
for capacities
1500 and 3000 kg.
Based on a special design the shipyard hooks can be fixed to avoid slipping
(resp. on steel plates which were braced for welding).

Optie:
Scheepswerf haken
voor WLL 1500 en 3000 kg.
Op basis van een speciaal ontwerp kunnen de werfhaken worden bevestigd om wegglijden te voorkomen
(bijv. op staalplaten die zijn geschoord voor het lassen).

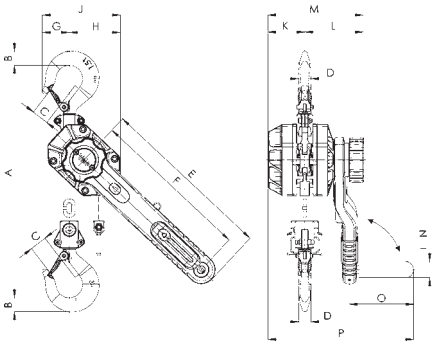

Yale*ERGO 360®*, 750 - 3000 kg, single fall

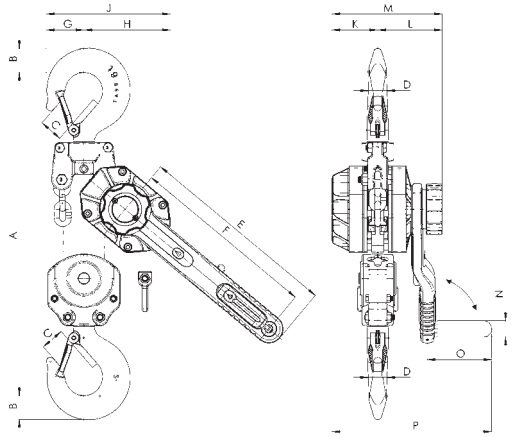

Yale*ERGO 360®*, 6000 kg, double fall / 2 kettingparten

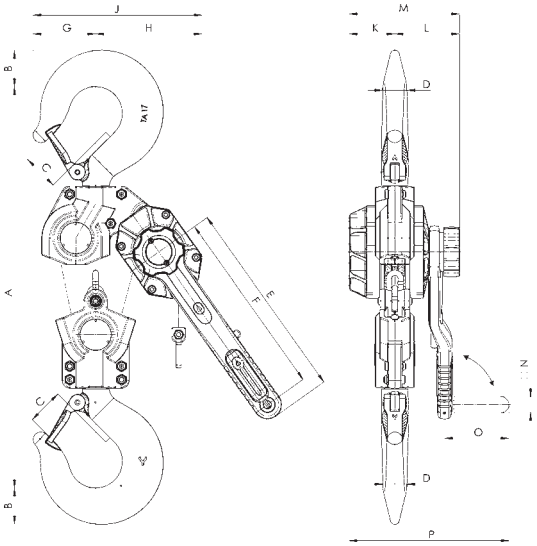

Yale*ERGO 360®*, 9000 kg, three fall / 3 kettingparten



www.DECORLUX.be
HIJSTECHNIEK
TECHNIQUE LEVAGE
HEBETECHNIK
LIFTING TECHNICS

# Lieren
# Winches



Elektrische Karweilier DKL
Electric Winch DKL



Elektrische Lier DM/DT
Electric Winch DM/DT



Batterij Lier
Battery Winch



Elektrische Lier DPS/DPT
Electric Winch DPS/DPT



Elektrische Kaapstanderlier MRV
Electric Capstan Winch MRV



Elektrische Lieren 12/24V
Electric Winches 12/24V



Staaldraadtrektakels
Steelwire Pulling Hoists



Handlieren
Manual Winches

# Type Delta DKL

## Elektrische Karweilier DKL / Electric Winch DKL




plug & play afstandsbediening /plug & play remote control




CP.0.DKL

## Eigenschappen

- Alleen geschikt voor hijswerkzaamheden.
- Eenvoudig te installeren voor snel gebruik.
- Eenvoudig en veilige ophanging door montagebeugel.
- Geschikt voor een breed scala aan industriële toepassingen.
- Permanent gesmeerde transmissie, zorgt voor een soepele en stille werking.
- Geleverd klaar voor gebruik met bedieningsschakelaar, voedingskabel en staalkabel met haak.
- Voldoet aan de Machinerichtlijn 2006/42/EG. Geleverd met testcertificaat, CE-conformiteitsverklaring en gebruiksaanwijzing.

## Features

- Only suitable for hoisting applications.
- Fast installation.
- Simple and safe suspension with mounting bracket.
- Suitable for a wide range of industrial applications.
- Permanently lubricated transmission, ensures smooth and quiet operation.
- Supplied ready to use with control switch, power cable and steel cable with load hook.
- Complies with the Machinery Directive 2006/42/EC. Supplied with test certificate, CE declaration of conformity and operating instructions.

KARWEILIER ®
*MINI WINCH ®*

| Specificaties / Specifications | | | | | | |
|---|---|---|---|---|---|---|
| Artikelnummer | Capaciteit | Hijshoogte | Max. hijssnelheid | Staaldraad | Energieverbruik | Gewicht |
| Article code | Capacity | Hoisting height | Max. lifting speed | Steel cable | Power output | Weight |
| | ton * | m | m/min | m x Ømm | kW | kg |
| CP.0.DKL.160 | 0.16 | 28 | 19 | 30 x 5 | 1.3 | 23 |
| CP.0.DKL.230 | 0.23 | 28 | 19 | 30 x 5 | 1.3 | 23 |
| CP.0.DKL.300 | 0.3 | 28 | 12 | 30 x 6 | 1.3 | 28 |
| CP.0.DKL.500 | 0.5 | 18 | 11 | 20 x 7 | 2.0 | 29 |

* alle lagen / all layers

| Specificaties / Specifications | |
|---|---|
| Toepassing / Application | Hijslier / Hoisting winch |
| Voltage / Operating voltage | 230V / 50-60Hz / 1Ph |
| Hijssnelheid / Lifting speed | Enkele snelheid / Single speed |
| Kabel / Cable | Staalkabel 1770 N/mm² / Steel cable 1770 N/mm² |
| Stuurkabel / Control cable | Standaard ≈10 meter / Standard ≈10 meter |
| Stroomkabel / Power cable | ≈5 meter met stekker / ≈5 meter with plug |
| Behuizing bescherming / Housing protection | IP 54 |
| Besturing bescherming / Control protection | IP 65 |
| Classificatie / Classification | M4/1Am (ISO/FEM) |
| Inschakelduur / Starts per uur / Duty cycle / Starts per hour | 30% / 180 |
| Isolatieklasse / Insulation class | F |
| Bedrijfstemperatuur / Operating temperature | -10°C - +40°C |
| Ladingtype / Load type | Alleen voor goederen, niet geschikt om personen te hijsen / Goods, may not be used to lift people |

| Beveiliging / Protection | |
|---|---|
| Schakelaar / Control switch | 230V schakelaar met noodstop / 230V pendant control switch with emergency stop button |
| Overlastbeveiliging / Overload protection | Zonder overlastbeveiliging / No overload protection |
| Rem / Brake | Mechanische rem, bereikt onmiddellijk remeffect en houdt de lading ook bij stroomuitval stevig vast /Mechanical brake, achieves immediate braking and holds the load in the event of power failure |
| Eindschakelaar / Limit switch | Mechanische hoogste eindschakelaar. Sensor stopt de motor als het staalkabel verkeerd wordt gewikkeld (onderste eindschakelaar). Belangrijk - neem de veiligheidswikkelingen in acht! / Mechanical upper limit switch. Sensor stops the motor if the rope is wound incorrectly (lower limit switch). Important - observe safety windings! |

## Optionele toebehoren / Optional accessories

## Elektrische Karweilier DKL / Electric Winch DKL

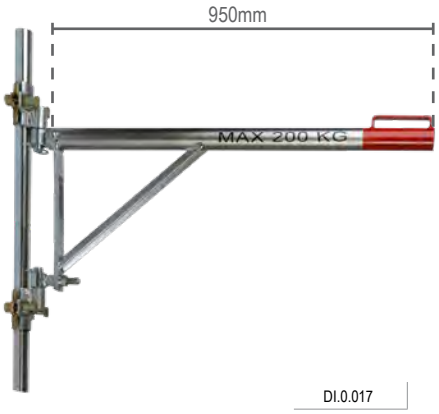


DI.0.017

| Zwaaiarm met koppelingen / Jib with hinges |
|---|
| Voor eenvoudige ophanging aan steigers. (max. 200kg) |
| For easy suspension from scaffolds. (max. 200kg) |




ST.0.011

| Ophangtriangel / Suspender triangle |
|---|
| Voor ophanging aan balken of haken. |
| For suspension from beams or hooks. |



CP.0.CEC

| 10m Verlengkabel / 10m Extension cable |
|---|
| Om de stuurkabel te verlengen. (max. 2x per lier) |
| For extending the control cable. (max. 2x per winch) |

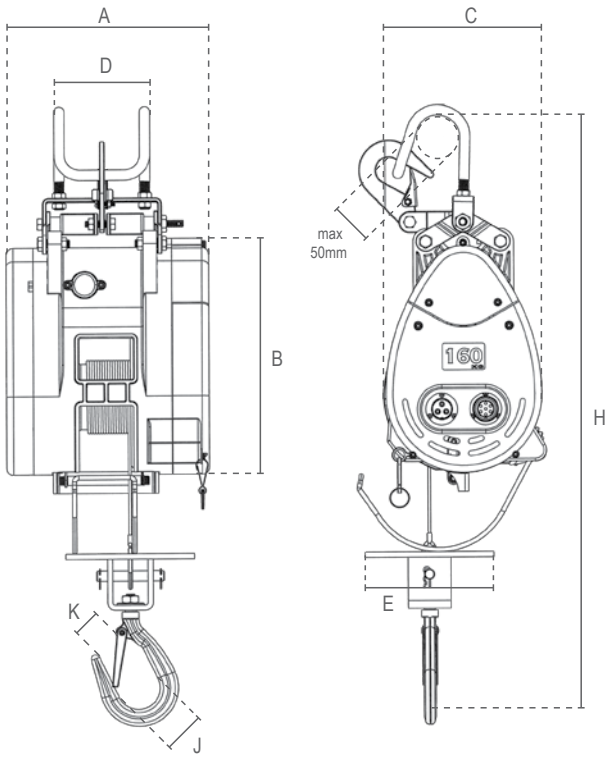


| Afmetingen / Dimensions | | | | | | | | |
|---|---|---|---|---|---|---|---|---|
| Artikelnummer / Article code | A | B | C | D | E | H | J | K |
| CP.0.DKL.160 | 240 | 263 | 180 | 114 | 129 | 660 | 49 | 41 |
| CP.0.DKL.230 | 240 | 263 | 180 | 114 | 129 | 660 | 49 | 41 |
| CP.0.DKL.300 | 210 | 308 | 240 | 146 | 155 | 670 | 49 | 41 |
| CP.0.DKL.500 | 210 | 308 | 240 | 146 | 155 | 670 | 49 | 41 |

# Type Delta DM-230V / DT- 400V

## Elektrische Lier DM/DT / Electric Winch DM/DT




DI.0.DM.200

## Eigenschappen

- Geschikt voor hijs- en trekwerkzaamheden.
- Geschikt voor een breed scala aan industriële toepassingen.
- Hoge inschakelduur.
- Permanent gesmeerde transmissie, zorgt voor een soepele en stille werking.
- Geleverd klaar voor gebruik met bedieningsschakelaar, voedingskabel en staalkabel met haak.
- Voldoet aan de Machinerichtlijn 2006/42/EG. Geleverd met testcertificaat, CE-conformiteitsverklaring en gebruiksaanwijzing.

## Features

- Suitable for lifting and pulling applications.
- Suitable for a wide range of industrial applications.
- High duty cycle.
- Permanently lubricated transmission, ensures smooth and quiet operation.
- Supplied ready to use with control switch, power cable and steel cable with load hook.
- Complies with the Machinery Directive 2006/42/EC. Supplied with test certificate, CE declaration of conformity and operating instructions.

| Specificaties / Specifications | | | | | | | |
|---|---|---|---|---|---|---|---|
| Artikelnummer | Capaciteit | Voltage | Hijshoogte | Max. hijssnelheid | Staaldraad | Energieverbruik | Gewicht |
| Article code | Capacity | Operating voltage | Hoisting height | Max. lifting speed | Steel cable | Power output | Weight |
| | ton | | m | m/min | m x Ømm | kW | kg |
| DI.0.DM.100 | 0.1 | 230V | 14 | 15 | 16 x 4 | 0.3 | 15 |
| DI.0.DM.150 | 0.15 | | 16 | 21 | 18 x 4 | 0.65 | 22 |
| DI.0.DM.200 | 0.2 | | 23 | 25 | 25 x 5 | 0.75 | 37 |
| DI.0.DM.200.48 | | | 48 | 38 | 50 x 5 | 1.45 | 43 |
| DI.0.DM.200.98 | | | 98 | 38 | 100 x 5 | 1.45 | 50 |
| DI.0.DM.300 | 0.3 | | 23 | 23 | 25 x 6 | 1.45 | 47 |
| DI.0.DM.300.38 | | | 38 | 23 | 40 x 6 | 1.45 | 50 |
| DI.0.DM.500 | 0.5 | | 23 | 16 | 25 x 7 | 2.2 | 64 |
| DI.0.DM.500.38 | | | 38 | 16 | 40 x 7 | 2.2 | 68 |

| Specificaties / Specifications | |
|---|---|
| Toepassing / Application | Hijslier / Hoisting winch |
| Voltage / Operating voltage | 230V / 50Hz / 1Ph / 400V / 50Hz / 3Ph (440V/60Hz op aanvraag/on request) |
| Hijssnelheid / Lifting speed | Enkele snelheid / Single speed |
| Kabel / Cable | Staalkabel 1960 N/mm² / Steel cable 1960 N/mm² |
| Stuurkabel / Control cable | Standaard ≈1 meter / Standard ≈1 meter |
| Stroomkabel / Power cable | ≈1 meter met stekker / ≈1 meter with plug |
| Behuizing bescherming / Housing protection | IP 55 (100-200kg IP 44) |
| Besturing bescherming / Control protection | IP 65 |
| Classificatie / Classification | M5/2m (ISO/FEM) |
| Inschakelduur / Starts per uur / Duty cycle / Starts per hour | 50% / 240 |
| Isolatieklasse / Insulation class | F |
| Bedrijfstemperatuur / Operating temperature | -10°C - +40°C |
| Ladingtype / Load type | Alleen voor goederen, niet geschikt om personen te hijsen / Goods, may not be used to lift people |

| Beveiliging / Protection | |
|---|---|
| Schakelaar / Control switch | 230/400V schakelaar met noodstop / 230/400V pendant control switch with emergency stop button |
| Overlastbeveiliging / Overload protection | Zonder overlastbeveiliging / No overload protection |
| Rem / Brake | Mechanische rem, bereikt onmiddellijk remeffect en houdt de lading ook bij stroomuitval stevig vast /Mechanical brake, achieves immediate braking and holds the load in the event of power failure |
| Eindschakelaar / Limit switch | Mechanische hoogste eindschakelaar / Mechanical upper limit switch |

# Type Delta DM-230V / DT- 400V

## Elektrische Lier DM/DT / Electric Winch DM/DT

CE

### Optioneel / Optional



DI.0.DM.100




DI.0.DM.300

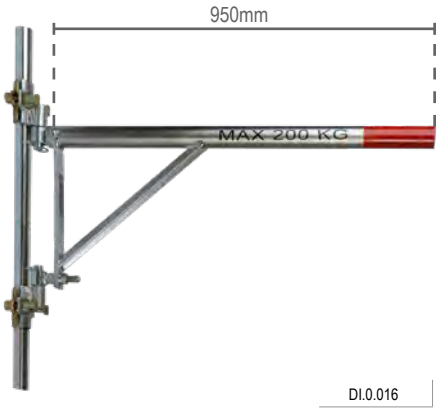


DI.0.016

| Zwaaiarm met koppelingen / Jib with hinges |
|---|
| Voor eenvoudige ophanging aan steigers. (max. 200kg) |
| For easy suspension from scaffolds. (max. 200kg) |




DI.0.DM.500

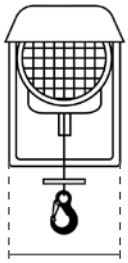


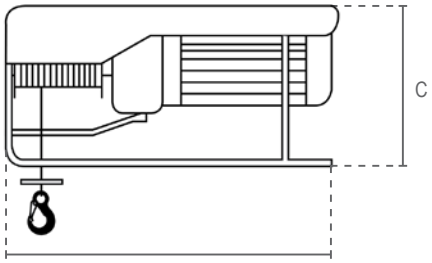


| Specificaties / Specifications | | | | | | | |
|---|---|---|---|---|---|---|---|
| Artikelnummer | Capaciteit | Voltage | Hijshoogte | Max. hijssnelheid | Staaldraad | Energieverbruik | Gewicht |
| Article code | Capacity | Operating voltage | Hoisting height | Max. lifting speed | Steel cable | Power output | Weight |
| | ton | | m | m/min | m x Ømm | kW | kg |
| DI.0.DT.300 | 0.3 | 400V | 23 | 23 | 25 x 6 | 1.85 | 47 |
| DI.0.DT.300.38 | | | 38 | 23 | 40 x 6 | 1.85 | 50 |
| DI.0.DT.500 | 0.5 | | 23 | 22 | 25 x 7 | 2.2 | 64 |
| DI.0.DT.500.38 | | | 38 | 22 | 40 x 7 | 2.2 | 68 |
| DI.0.DT.950 | 0.95 | | 23 | 12 | 25x2 x 7 | 2.2 | 75 |
| DI.0.DT.950.38 | | | 38 | 12 | 40x2 x 7 | 2.2 | 84 |

| Afmetingen / Dimensions | | | | | |
|---|---|---|---|---|---|
| Artikelnummer / Article code | A | B | C | J | K |
| DI.0.DM.100 | 375 | 170 | 240 | 26 | 22 |
| DI.0.DM.150 | 415 | 210 | 310 | 26 | 22 |
| DI.0.DM.200 / .48 | 510 | 300 | 385 | 26 | 22 |
| DI.0.DM.200.98 | 720 | 300 | 385 | 26 | 22 |
| DI.0.DM.300 | 580 | 305 | 410 | 26 | 22 |
| DI.0.DM.500 | 600 | 300 | 470 | 26 | 22 |
| DI.0.DT.300 | 580 | 305 | 410 | 26 | 22 |
| DI.0.DT.500 | 600 | 300 | 470 | 26 | 22 |
| DI.0.DT.950 | 600 | 300 | 470 | 36 | 25 |

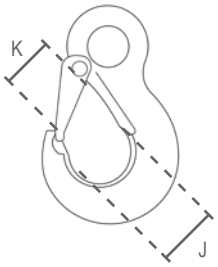

# Type Delta DBW

## Batterij Lier / Battery Winch






## Eigenschappen

- Geschikt voor trekwerkzaamheden.
- Eenvoudig te installeren voor snel gebruik.
- Eenvoudig te bedienen en te transporteren door zijn lage gewicht en draagbare koffer.
- Ideaal voor toepassingen zonder stroomvoorziening.
- Batterijvermogen: 20min bij maximale belasting.
- Geleverd met reserve batterij en oplader.
- Geleverd klaar voor gebruik met bedieningsschakelaar, staalkabel met haak, klapblock en gereedschap.
- Voldoet aan de Machinerichtlijn 2006/42/EG. Geleverd met testcertificaat, CE-conformiteitsverklaring en gebruiksaanwijzing.

## Features

- Suitable for pulling applications.
- Fast installation.
- Easy handling and high transportability due to low weight and carrying case.
- Ideal for applications without power supply.
- Battery power: 20min at maximum load.
- Delivered with spare battery and charger.
- Supplied ready to use with control switch, steel cable with load hook, pulley hook and tools.
- Complies with the Machinery Directive 2006/42/EC. Supplied with test certificate, CE declaration of conformity and operating instructions.

| Specificaties / Specifications | | | | | | | |
|---|---|---|---|---|---|---|---|
| Artikelnummer | Capaciteit | Trekcapaciteit | Trekbereik | Max. treksnelheid | Staaldraad | Energieverbruik | Gewicht |
| Article code | Capacity | Pulling capacity | Pulling range | Max. pulling speed | Steel cable | Power output | Weight |
| | ton | ton | m | m/min | m x Ømm | kW | kg |
| CZ.0.DBW.350 | 0.14 | 0.35 | 13 | 4 | 15 x 5 | 0.28 | 8.2 |

| Specificaties / Specifications | |
|---|---|
| Toepassing / Application | Treklier / Pulling winch |
| Voltage / Operating voltage | 18V oplaadbare li-ion batterij / 18V rechargeable li-ion battery |
| Treksnelheid / Pulling speed | Enkele snelheid / Single speed |
| Kabel / Cable | Staalkabel / Steel cable |
| Stuurkabel / Control cable | Standaard ≈3 meter / Standard ≈3 meter |
| Stroomkabel / Power cable | - |
| Behuizing bescherming / Housing protection | IP 54 |
| Besturing bescherming / Control protection | IP 50 |
| Classificatie / Classification | M4/1Am (ISO/FEM) |
| Inschakelduur / Starts per uur / Duty cycle / Starts per hour | 25% / 180 |
| Isolatieklasse / Insulation class | F |
| Bedrijfstemperatuur / Operating temperature | -10°C - +40°C |
| Ladingtype / Load type | Alleen voor goederen, niet geschikt om personen te hijsen / Goods, may not be used to lift people |

| Beveiliging / Protection | |
|---|---|
| Schakelaar / Control switch | Schakelaar met noodstop / Pendant control switch with emergency stop button |
| Overlastbeveiliging / Overload protection | Digitale beveiliging / Digital protection |
| Rem / Brake | Mechanische rem, bereikt onmiddellijk remeffect en houdt de lading ook bij stroomuitval stevig vast /Mechanical brake, achieves immediate braking and holds the load in the event of power failure |
| Eindschakelaar / Limit switch | Geen eindschakelaar / No limit switch |

# Type Delta DBW

Batterij Lier / Battery Winch

| Draagkoffer / Carrying case | | |
|---|---|---|
| Capaciteit | Totale gewicht * | Afmetingen |
| Capacity | Total weight * | Dimensions |
| ton | kg | mm |
| 0.35 | 16.8 | 690 x 440 x 170 |

* inclusief alle accessoires / including all accessories






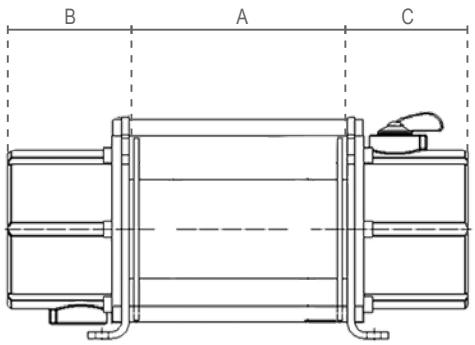


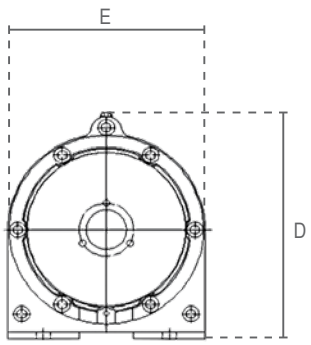


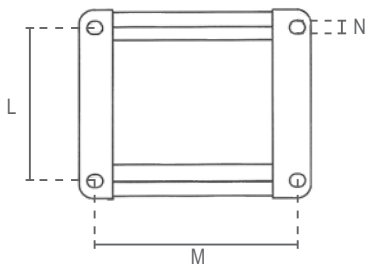


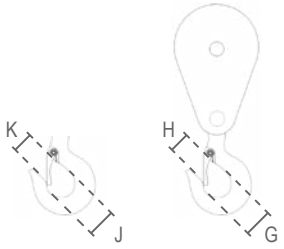


| Afmetingen / Dimensions | | | | | | | | | | | | |
|---|---|---|---|---|---|---|---|---|---|---|---|---|
| Artikelnummer / Article code | A | B | C | D | E | G | H | J | K | L | M | N |
| CZ.0.DBW.350 | 89 | 135 | 118 | 143 | 122 | 26 | 21 | 33 | 26 | 75 | 150 | 8 |

# Type Delta DPS-230V

Elektrische Lier DPS / Electric Winch DPS




plug & play afstandsbediening /plug & play remote control

CP.0.DPS

## Eigenschappen

- Geschikt voor trekwerkzaamheden.
- Geschikt voor een breed scala aan industriële toepassingen.
- Permanent gesmeerde transmissie, zorgt voor een soepele en stille werking.
- Geleverd klaar voor gebruik met bedieningsschakelaar, voedingskabel en staalkabel met haak.
- Voldoet aan de Machinerichtlijn 2006/42/EG. Geleverd met testcertificaat, CE-conformiteitsverklaring en gebruiksaanwijzing.

## Features

- Suitable for pulling applications.
- Suitable for a wide range of industrial applications.
- Permanently lubricated transmission, ensures smooth and quiet operation.
- Supplied ready to use with control switch, power cable and steel cable with load hook.
- Complies with the Machinery Directive 2006/42/EC. Supplied with test certificate, CE declaration of conformity and operating instructions.

| Specificaties / Specifications | | | | | | | |
|---|---|---|---|---|---|---|---|
| Artikelnummer | Capaciteit | Voltage | Trekbereik | Max. treksnelheid | Staaldraad | Energieverbruik | Gewicht |
| Article code | Capacity | Operating voltage | Pulling range | Max. pulling speed | Steel cable | Power output | Weight |
| | ton | | m | m/min | m x Ømm | kW | kg |
| CP.0.DPS.200 | 0.2 | 230V | 28 | 14.1 | 30 x 6 | 0.37 | 32 |
| CP.0.DPS.250 | 0.25 | | 28 | 14.1 | 30 x 6 | 0.6 | 36 |
| CP.0.DPS.300 | 0.3 | | 28 | 14.1 | 30 x 7 | 0.75 | 38 |
| CP.0.DPS.500 | 0.5 | | 43 | 18.9 | 45 x 8 | 1.5 | 76 |

| Specificaties / Specifications | |
|---|---|
| Toepassing / Application | Treklier / Pulling winch |
| Voltage / Operating voltage | 230V / 50Hz / 1Ph / 400V / 50-60Hz / 3Ph |
| Treksnelheid / Pulling speed | Enkele snelheid / Single speed |
| Kabel / Cable | Staalkabel / Steel cable |
| Stuurkabel / Control cable | Standaard ≈2 meter / Standard ≈2 meter |
| Stroomkabel / Power cable | ≈1 meter met stekker / ≈1 meter with plug |
| Behuizing bescherming / Housing protection | IP 44 (vanaf/from 2ton IP 54) |
| Besturing bescherming / Control protection | IP 65 |
| Classificatie / Classification | M5/2m (ISO/FEM) |
| Inschakelduur / Starts per uur / Duty cycle / Starts per hour | 40% / 240 |
| Isolatieklasse / Insulation class | F |
| Bedrijfstemperatuur / Operating temperature | -10°C - +40°C |
| Ladingtype / Load type | Alleen voor goederen, niet geschikt om personen te hijsen / Goods, may not be used to lift people |

# Type Delta DPT- 400V

## Elektrische Lier DPT / Electric Winch DPT

| Beveiliging / Protection | |
|---|---|
| Schakelaar / Control switch | 230/400V schakelaar met noodstop / 230/400V pendant control switch with emergency stop button |
| Overlastbeveiliging / Overload protection | Zonder overlastbeveiliging, vanaf 1ton optioneel / No overload protection, from 1ton optional |
| Rem / Brake | Mechanische rem, bereikt onmiddellijk remeffect en houdt de lading ook bij stroomuitval stevig vast / Mechanical brake, achieves immediate braking and holds the load in the event of power failure |
| Eindschakelaar / Limit switch | Geen eindschakelaar / No limit switch |




CP.0.DPT




plug & play afstandsbediening /plug & play remote control
(alleen voor / only for ≤ 0.5 ton)

## Eigenschappen

- Geschikt voor trekwerkzaamheden.
- Geschikt voor een breed scala aan industriële toepassingen.
- Permanent gesmeerde transmissie, zorgt voor een soepele en stille werking.
- Geleverd klaar voor gebruik met bedieningsschakelaar, voedingskabel en staalkabel met haak.
- Voldoet aan de Machinerichtlijn 2006/42/EG. Geleverd met testcertificaat, CE-conformiteitsverklaring en gebruiksaanwijzing.

## Features

- Suitable for pulling applications.
- Suitable for a wide range of industrial applications.
- Permanently lubricated transmission, ensures smooth and quiet operation.
- Supplied ready to use with control switch, power cable and steel cable with load hook.
- Complies with the Machinery Directive 2006/42/EC. Supplied with test certificate, CE declaration of conformity and operating instructions.

| Specificaties / Specifications | | | | | | | |
|---|---|---|---|---|---|---|---|
| Artikelnummer | Capaciteit | Voltage | Trek bereik | Max. trek snelheid | Staaldraad | Energieverbruik | Gewicht |
| Article code | Capacity | Operating voltage | Pulling range | Max. pulling speed | Steel cable | Power output | Weight |
| | ton | | m | m/min | m x Ømm | kW | kg |
| CP.0.DPT.30075 | 0.3 | 400V | 28 | 14.1 | 30 x 7 | 0.75 | 38 |
| CP.0.DPT.30151 | 0.5 | | 43 | 18.9 | 45 x 8 | 1.5 | 76 |
| CP.0.DPT.30375 | 1 | | 43 | 12.9 | 45 x 10 | 2.25 | 152 |
| CP.0.DPT.30750 | 2 | | 68 | 17.4 | 70 x 12 | 3.75 | 364 |
| CP.0.DPT.31500 | 3 | | 68 | 19.7 | 70 x 16 | 5.62 | 391 |
| CP.0.DPT.34000 | 5 | | 68 | 12 | 70 x 20 | 7.5 | 472 |

# Elektrische Lier DPS/DPT / Electric Winch DPS/DPT

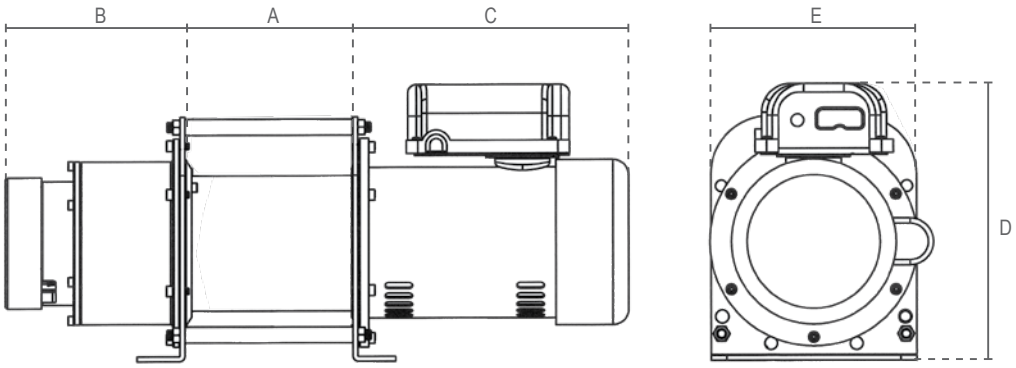


CP.0.DPS

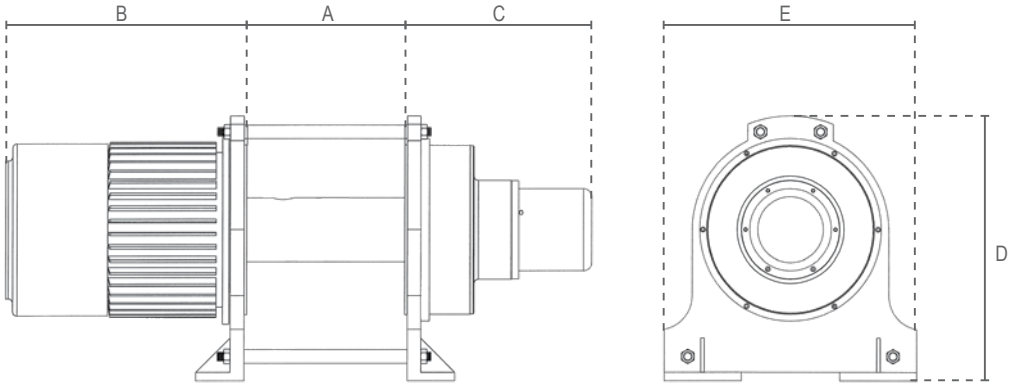


CP.0.DPT

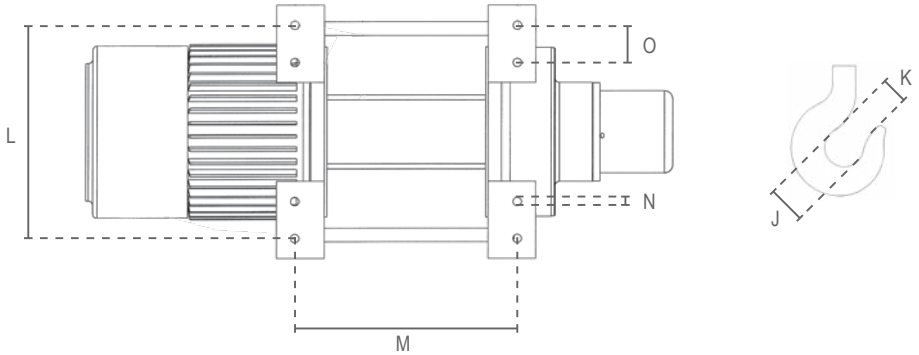


| Artikelnummer / Article code | Afmetingen / Dimensions | | | | | | | | | | |
|---|---|---|---|---|---|---|---|---|---|---|---|
| | A | B | C | D | E | J | K | L | M | N | O |
| CP.0.DPS.200 | 125 | 246 | 164 | 261 | 201 | 49 | 41 | 155 | 160 | 7 | - |
| CP.0.DPS.250 | 160 | 265 | 164 | 261 | 201 | 49 | 41 | 155 | 160 | 7 | - |
| CP.0.DPS.300 | 160 | 279 | 164 | 261 | 201 | 49 | 41 | 155 | 224 | 7 | - |
| CP.0.DPS.500 | 246 | 272 | 180 | 285 | 310 | 49 | 41 | 260 | 305 | 8 | - |
| | | | | | | | | | | | |
| CP.0.DPT.30075 | 160 | 279 | 164 | 261 | 201 | 49 | 41 | 155 | 224 | 7 | - |
| CP.0.DPT.30151 | 246 | 272 | 180 | 365 | 310 | 49 | 41 | 260 | 305 | 8 | - |
| CP.0.DPT.30375 | 340 | 383 | 360 | 365 | 400 | 39 | 30 | 350 | 510 | 14 | - |
| CP.0.DPT.30750 | 378 | 524 | 436 | 520 | 590 | 39 | 30 | 540 | 525 | 14 | 85 |
| CP.0.DPT.31500 | 378 | 580 | 436 | 520 | 590 | 45 | 35 | 540 | 525 | 14 | 85 |
| CP.0.DPT.34000 | 510 | 694 | 436 | 520 | 590 | 55 | 38 | 540 | 660 | 14 | 85 |

# Elektrische Lier DPS/DPT / Electric Winch DPS/DPT

| Capaciteit per laag / Capacity per layer | | | | | | | | | | |
|---|---|---|---|---|---|---|---|---|---|---|
| | | | | | ton | | | | | |
| Laag / Layer | CP.0.DPS.200 | CP.0.DPS.250 | CP.0.DPS.300 | CP.0.DPS.500 | CP.0.DPT.30075 | CP.0.DPT.30151 | CP.0.DPT.30375 | CP.0.DPT.30750 | CP.0.DPT.31500 | CP.0.DPT.34000 |
| 1. | 0.34 | 0.42 | 0.45 | 0.76 | 0.45 | 0.76 | 1.21 | 2.71 | 4.61 | |
| 2. | 0.29 | 0.37 | 0.41 | 0.68 | 0.41 | 0.68 | 1.09 | 2.42 | 4.09 | |
| 3. | 0.26 | 0.33 | 0.36 | 0.61 | 0.36 | 0.61 | 1 | 2.18 | 3.66 | |
| 4. | 0.24 | 0.31 | 0.32 | 0.54 | 0.32 | 0.54 | - | 2 | 3.31 | |
| 5. | 0.21 | 0.27 | 0.3 | 0.5 | 0.3 | 0.5 | - | - | 3 | |
| 6. | 0.2 | 0.25 | - | - | - | - | - | - | - | |

| Snelheid per laag / Speed per layer | | | | | | | | | | |
|---|---|---|---|---|---|---|---|---|---|---|
| | | | | | m/min | | | | | |
| Laag / Layer | CP.0.DPS.200 | CP.0.DPS.250 | CP.0.DPS.300 | CP.0.DPS.500 | CP.0.DPT.30075 | CP.0.DPT.30151 | CP.0.DPT.30375 | CP.0.DPT.30750 | CP.0.DPT.31500 | CP.0.DPT.34000 |
| 1. | 8 | 8 | 8.6 | 12.3 | 8.6 | 12.3 | 9.8 | 13.3 | 13.2 | |
| 2. | 9.3 | 9.3 | 9.7 | 14.5 | 9.7 | 14.5 | 10.8 | 15.2 | 15.4 | |
| 3. | 10.4 | 10.4 | 11.3 | 15.7 | 11.3 | 15.7 | 12.9 | 16.4 | 16.8 | |
| 4. | 11.6 | 11.6 | 12.6 | 17.8 | 12.6 | 17.8 | - | 17.4 | 18.6 | |
| 5. | 12.8 | 12.8 | 14.1 | 18.9 | 14.1 | 18.9 | - | - | 19.7 | |
| 6. | 14.1 | 14.1 | - | - | - | - | - | - | - | |

| Trekkracht per helling / Pulling force per gradient * | | | | | | | | | | |
|---|---|---|---|---|---|---|---|---|---|---|
| | | | | | ton | | | | | |
| Helling / Gradient | CP.0.DPS.200 | CP.0.DPS.250 | CP.0.DPS.300 | CP.0.DPS.500 | CP.0.DPT.30075 | CP.0.DPT.30151 | CP.0.DPT.30375 | CP.0.DPT.30750 | CP.0.DPT.31500 | CP.0.DPT.34000 |
| 0° | 1.17 | 1.47 | 1.76 | 2.94 | 1.76 | 2.94 | 5.88 | 11.76 | 17.64 | 29.41 |
| < 6° (10%) | 0.74 | 0.92 | 1.11 | 1.85 | 1.11 | 1.85 | 3.71 | 7.41 | 11.11 | 18.51 |
| < 11° (20%) | 0.55 | 0.69 | 0.83 | 1.38 | 0.83 | 1.38 | 2.77 | 5.55 | 8.33 | 13.88 |
| < 17° (30%) | 0.44 | 0.55 | 0.66 | 1.11 | 0.66 | 1.11 | 2.22 | 4.44 | 6.66 | 11.11 |
| < 22° (40%) | 0.37 | 0.46 | 0.55 | 0.92 | 0.55 | 0.92 | 1.85 | 3.71 | 5.55 | 9.25 |
| < 27° (50%) | 0.32 | 0.41 | 0.49 | 0.82 | 0.49 | 0.82 | 1.63 | 3.27 | 4.91 | 8.19 |
| < 31° (60%) | 0.29 | 0.37 | 0.44 | 0.74 | 0.44 | 0.74 | 1.49 | 2.98 | 4.47 | 7.46 |
| < 35° (70%) | 0.27 | 0.34 | 0.41 | 0.69 | 0.41 | 0.69 | 1.38 | 2.77 | 4.16 | 6.94 |
| < 45° (100%) | 0.24 | 0.31 | 0.36 | 0.61 | 0.36 | 0.61 | 1.21 | 2.41 | 3.61 | 6.02 |
| > 45 ° | 0.2 | 0.25 | 0.3 | 0.5 | 0.3 | 0.5 | 1 | 2 | 3 | 5 |
| * bovenste laag op harde ondergrond / top layer on hard surface | | | | | | | | | | |

Uitleg van de kabellagen / Explanation of the cable layers

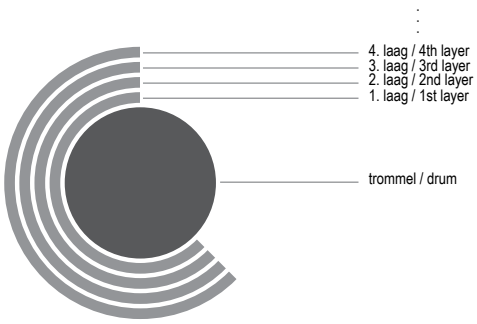

# Type Delta MRV

## Elektrische Kaapstanderlier MRV / Electric Capstan Winch MRV



DI.0.MRV

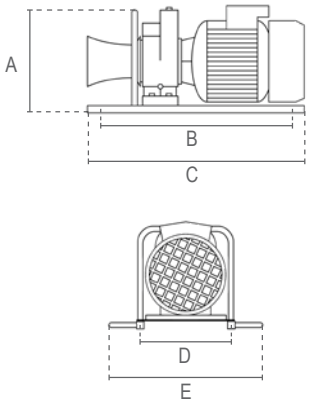


## Eigenschappen

- Alleen geschikt voor trekwerkzaamheden.
- Geschikt voor een breed scala aan industriële toepassingen.
- Hoge inschakelduur.
- Permanent gesmeerde transmissie, zorgt voor een soepele en stille werking.
- Geleverd klaar voor gebruik met bedieningsschakelaar en voedingskabel. Voldoet aan de Machinerichtlijn 2006/42/EG. Geleverd met testcertificaat,
- CE-conformiteitsverklaring en gebruiksaanwijzing.

## Features

- Only suitable for pulling applications.
- Suitable for a wide range of industrial applications.
- High duty cycle.
- Permanently lubricated transmission, ensures smooth and quiet operation.
- Supplied ready to use with control switch and power cable.
- Complies with the Machinery Directive 2006/42/EC. Supplied with test certificate, CE declaration of conformity and operating instructions.

| Specificaties / Specifications | | | | |
|---|---|---|---|---|
| Artikelnummer | Capaciteit | Max. treksnelheid | Energieverbruik | Gewicht |
| Article code | Capacity | Max. pulling speed | Power output | Weight |
| | ton | m/min | kW | kg |
| DI.0.MRV | 0.75 | 15 | 2.2 | 40 |

| Specificaties / Specifications | |
|---|---|
| Toepassing / Application | Treklier / Pulling winch |
| Voltage / Operating voltage | 230V / 50Hz / 1Ph |
| Treksnelheid / Pulling speed | Enkele snelheid / Single speed |
| Stuurkabel / Control cable | Standaard ≈1 meter / Standard ≈1 meter |
| Stroomkabel / Power cable | ≈1 meter met stekker / ≈1 meter with plug |
| Behuizing bescherming / Housing protection | IP 55 |
| Classificatie / Classification | M5/2m (ISO/FEM) |
| Inschakelduur / Starts per uur / Duty cycle / Starts per hour | 50% / 240 |
| Isolatieklasse / Insulation class | F |
| Bedrijfstemperatuur / Operating temperature | -10°C - +40°C |
| Ladingtype / Load type | Alleen voor goederen, niet geschikt om personen te hijsen / Goods, may not be used to lift people |

| Beveiliging / Protection | |
|---|---|
| Overlastbeveiliging / Overload protection | Zonder overlastbeveiliging / No overload protection |
| Rem / Brake | Mechanische rem / Mechanical brake |
| Eindschakelaar / Limit switch | Geen eindschakelaar / No limit switch |

| Afmetingen / Dimensions | | | | | |
|---|---|---|---|---|---|
| Capaciteit / Capacity | A | B | C | D | H |
| 0.75 ton | 320 | 520 | 600 | 260 | 500 |

# Type Delta ATV

Elektrische Lier ATV / Electric Winch ATV




## Eigenschappen

- Alleen geschikt voor trekwerkzaamheden.
- Alleen geschikt voor het bergen van voertuigen of boten.
- Met vrijloopfunctie.
- Permanent gesmeerde transmissie, zorgt voor een soepele en stille werking.
- Geleverd met bedieningsschakelaar, voedingskabel en staalkabel met haak.
- De voertuig-batterij moet worden gevoed door een constant draaiende motor.
- Voldoet aan de Machinerichtlijn 2006/42/EG. Geleverd met testcertificaat, CE-conformiteitsverklaring en gebruiksaanwijzing.

## Features

- Only suitable for pulling applications.
- Only suitable for the recovery of vehicles or boats.
- With free spooling function.
- Permanently lubricated transmission, ensures smooth and quiet operation.
- Supplied with control switch, power cable and steel cable with load hook.
- The vehicle-battery must be powered by a constantly running engine.
- Complies with the Machinery Directive 2006/42/EC. Supplied with test certificate, CE declaration of conformity and operating instructions.

## Optioneel / Optional




| Specificaties / Specifications | | | | | | | |
|---|---|---|---|---|---|---|---|
| Artikelnummer | Capaciteit | | Trekbereik | Max. treksnelheid | Staaldraad | Energieverbruik | Gewicht |
| Article code | Capacity | | Pulling range | Max. pulling speed | Steel cable | Power output | Weight |
| | 1e laag / 1st layer | bovenste laag / topmost layer | | 1e laag / 1st layer | | | |
| | ton | | m | m/min | m x Ømm | kW | kg |
| ZH.0.ATV.3000 | 1.36 | 0.76 | 8 | 2.1 | 10 x 5.5 | 1 | 7.5 |

| Specificaties / Specifications | |
|---|---|
| Toepassing / Application | Treklier / Pulling winch |
| Voltage / Operating voltage | 12V |
| Treksnelheid / Pulling speed | Enkele snelheid / Single speed |
| Kabel / Cable | Staalkabel / Steel cable |
| Stuurkabel / Control cable | Standaard ≈1 meter / Standard ≈1 meter |
| Stroomkabel / Power cable | ≈1 meter met batterijconnectoren / ≈1 meter with battery connectors |
| Behuizing bescherming / Housing protection | IP 67 |
| Besturing bescherming / Control protection | IP 65 |
| Bedrijfstemperatuur / Operating temperature | -20°C - +85°C |
| Ladingtype / Load type | Alleen voor goederen, niet geschikt om personen te hijsen / Goods, may not be used to lift people |

| Beveiliging / Protection | |
|---|---|
| Overlastbeveiliging / Overload protection | Zonder overlastbeveiliging / No overload protection |
| Rem / Brake | Mechanische rem / Mechanical brake |
| Eindschakelaar / Limit switch | Geen eindschakelaar / No limit switch |

# Type Delta ATV

## Elektrische Lier DDC / Electric Winch DDC




## Eigenschappen

- Alleen geschikt voor trekwerkzaamheden.
- Alleen geschikt voor het bergen van voertuigen of boten.
- Met vrijloophendel.
- Permanent gesmeerde transmissie, zorgt voor een soepele en stille werking.
- Geleverd met bedieningsschakelaar, voedingskabel en staalkabel met haak.
- De voertuig-batterij moet worden gevoed door een constant draaiende motor.
- Voldoet aan de Machinerichtlijn 2006/42/EG. Geleverd met testcertificaat, CE-conformiteitsverklaring en gebruiksaanwijzing.

## Features

- Only suitable for pulling applications.
- Only suitable for the recovery of vehicles or boats.
- With free spooling lever.
- Permanently lubricated transmission, ensures smooth and quiet operation.
- Supplied with control switch, power cable and steel cable with load hook.
- The vehicle-battery must be powered by a constantly running engine.
- Complies with the Machinery Directive 2006/42/EC. Supplied with test certificate, CE declaration of conformity and operating instructions.

### Optioneel / Optional




| Specificaties / Specifications | | | | | | | | |
|---|---|---|---|---|---|---|---|---|
| Artikelnummer | Capaciteit | | Trekbereik | Max. treksnelheid | Staaldraad | Energieverbruik | | Gewicht |
| Article code | Capacity | | Pulling range | Max. pulling speed | Steel cable | Power output | | Weight |
| | 1e laag / 1st layer | bovenste laag / topmost layer | | 1e laag / 1st layer | | 12V | 24V | |
| | ton | | m | m/min | m x Ømm | kW | | kg |
| ZH.0.DDC.9000 | 4.08 | 2.81 | 26 | 2.3 | 28 x 8 | 4.4 | 6 | 39 |
| ZH.0.DDC.12000 | 5.44 | 3.40 | 24 | 2.1 | 26 x 9.5 | 5 | 6.4 | 44 |
| ZH.0.DDC.15000 | 6.81 | 4.02 | 24 | 1.3 | 26 x 11.5 | 5.3 | 7.1 | 70 |

| Specificaties / Specifications | |
|---|---|
| Toepassing / Application | Treklier / Pulling winch |
| Voltage / Operating voltage | 12/24V |
| Treksnelheid / Pulling speed | Enkele snelheid / Single speed |
| Kabel / Cable | Staalkabel / Steel cable |
| Stuurkabel / Control cable | Standaard ≈1 meter / Standard ≈1 meter |
| Stroomkabel / Power cable | ≈1 meter met batterijconnectoren / ≈1 meter with battery connectors |
| Behuizing bescherming / Housing protection | IP 68 |
| Besturing bescherming / Control protection | IP 65 |
| Bedrijfstemperatuur / Operating temperature | -20°C - +85°C |
| Ladingtype / Load type | Alleen voor goederen, niet geschikt om personen te hijsen / Goods, may not be used to lift people |

| Beveiliging / Protection | |
|---|---|
| Overlastbeveiliging / Overload protection | Zonder overlastbeveiliging / No overload protection |
| Rem / Brake | Mechanische rem / Mechanical brake |
| Eindschakelaar / Limit switch | Geen eindschakelaar / No limit switch |

# Elektrische Lier ATV/DDC / Electric Winch ATV/DDC

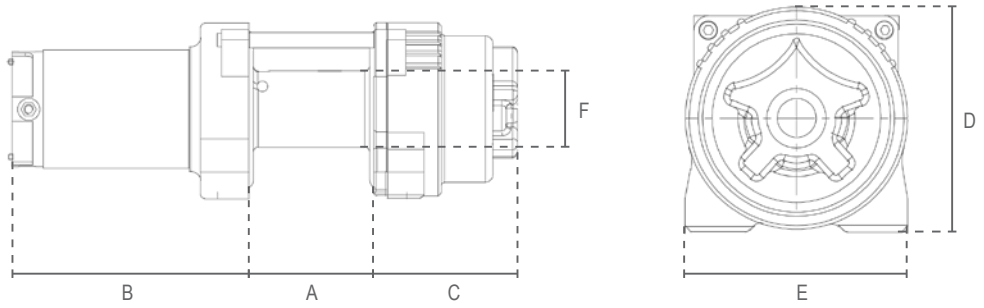


ZH.0.ATV

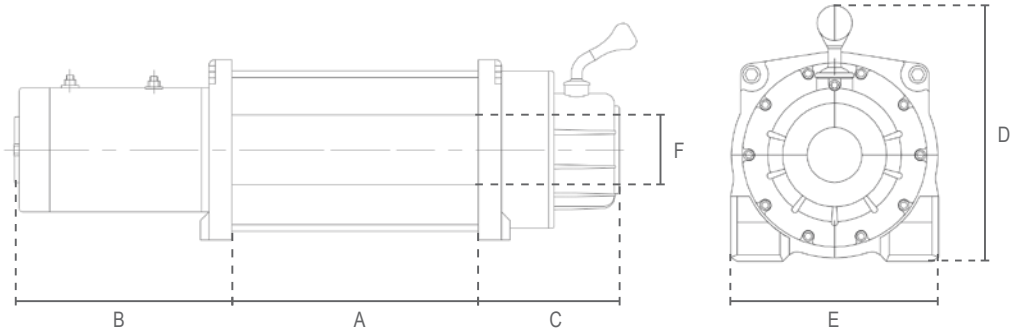


ZH.0.DDC

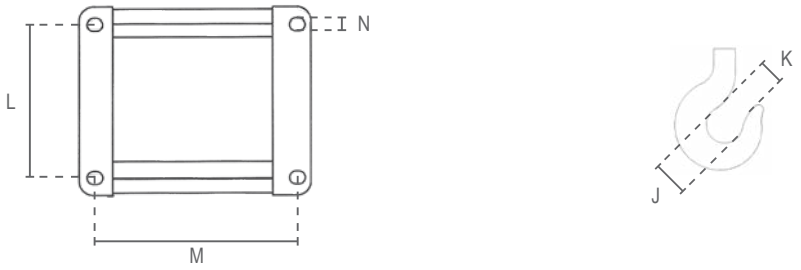


| Artikelnummer / Article code | Afmetingen / Dimensions | | | | | | | | | | |
|---|---|---|---|---|---|---|---|---|---|---|---|
| | A | B | C | D | E | F | J | K | L | M | N |
| ZH.0.ATV.3000 | 83 | 161 | 95 | 120 | 114 | 50 | 29 | 23 | 76 | 124 | 8,3 |
| ZH.0.DDC.9000 | 226 | 209 | 142 | 184 | 168 | 76 | 37 | 33 | 114 | 254 | 10,5 |
| ZH.0.DDC.12000 | 226 | 209 | 142 | 184 | 168 | 76 | 37 | 33 | 114 | 254 | 10,5 |
| ZH.0.DDC.15000 | 223 | 233 | 149 | 240 | 216 | 88 | 49 | 39 | 114 | 254 | 12 |

# Type Delta FOR-AL

Trektakel met Aluminium Huis / Pulling Hoist with Aluminium Casting




Optioneel / Optional



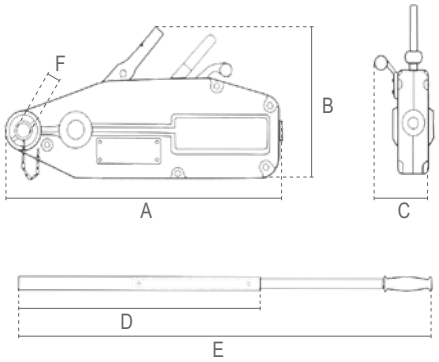


## Eigenschappen

- Geschikt voor hijs- en trekwerkzaamheden.
- Eenvoudig en veilig te bedienen.
- Robuuste, corrosiebestendige aluminium behuizing.
- Parallel klemsysteem met groot contactoppervlak.
- Kan in elke positie gebruikt worden.
- Voldoet aan de Machinerichtlijn 2006/42/EG. Geleverd met testcertificaat, CE-conformiteitsverklaring en gebruiksaanwijzing.

## Features

- Suitable for lifting and pulling applications.
- Simple and safe to operate.
- Robust, corrosion-protected aluminium housing.
- Parallel clamping system with large contact area.
- Can be used in any direction.
- Complies with the Machinery Directive 2006/42/EC. Supplied with test certificate, CE declaration of conformity and operating instructions.

| Specificaties / Specifications | | | | | | | | |
|---|---|---|---|---|---|---|---|---|
| Artikelnummer | Hijsvermogen | Trekvermogen | Staaldraad | Treksterkte | Min breeklast draad | Slag | Netto gewicht | Gewicht staaldraad |
| Article code | Lifting capacity | Pulling capacity | Steel cable | Tensile strength | Min breaking strength of cable | Forward travel | Net weight | Weight steel cable |
| | ton | ton | Ømm | N/mm² | kN | mm | kg | kg* |
| SG.0.0250000800 | 0.8 | 1.3 | 8.3 | 1770 | 43.31 | ≈52 | 6.5 | 8 |
| SG.0.0250001600 | 1.6 | 2.6 | 11 | 1770 | 76.24 | ≈55 | 12.5 | 18 |
| SG.0.0250003200 | 3.2 | 5.2 | 16 | 1770 | 161.3 | ≈28 | 23.5 | 24 |
| SG.0.0250005400 | 5.4 | 8 | 20 | 1770 | 252.05 | ≈30 | 56 | 38 |

* voor 20m kabel / for 20m cable

| Specificaties / Specifications | |
|---|---|
| Bedrijfstemperatuur / Operating temperature | -10°C - +50°C |
| Ladingtype / Load type | Alleen voor goederen, niet geschikt om personen te hijsen / Goods, may not be used to lift people |
| Overlastbeveiliging / Overload protection | Breekpen overlastbeveiliging / Shear bolt overload protection |

| Afmetingen / Dimensions | | | | | | |
|---|---|---|---|---|---|---|
| Capaciteit / Capacity ton | A | B | C | D | E | F |
| 0.8 | 428 | 235 | 64 | 800 | - | 22 |
| 1.6 | 544 | 275 | 97 | 800 | 1200 | 25 |
| 3.2 | 660 | 325 | 116 | 800 | 1200 | 30 |
| 5.4 | 930 | 480 | 152 | 750 | 1180 | 40 |

# Type Delta FOR-ST

Trektakel met Stalen Huis / Pulling Hoist with Steel Casting



Optioneel / Optional



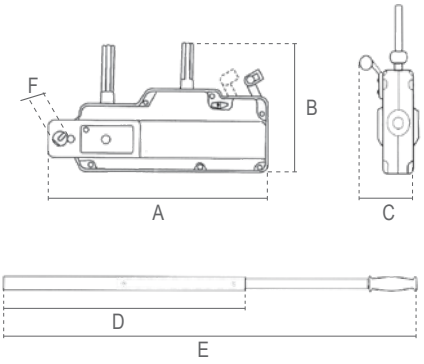


## Eigenschappen

- Geschikt voor hijs- en trekwerkzaamheden.
- Eenvoudig en veilig te bedienen.
- Robuuste, corrosiebestendige stalen behuizing.
- Parallel klemsysteem met groot contactoppervlak.
- Kan in elke positie gebruikt worden.
- Voldoet aan de Machinerichtlijn 2006/42/EG. Geleverd met testcertificaat, CE-conformiteitsverklaring en gebruiksaanwijzing.

## Features

- Suitable for lifting and pulling applications.
- Simple and safe to operate.
- Robust, corrosion-protected steel housing.
- Parallel clamping system with large contact area.
- Can be used in any direction.
- Complies with the Machinery Directive 2006/42/EC. Supplied with test certificate, CE declaration of conformity and operating instructions.

| Specificaties / Specifications | | | | | | | | |
|---|---|---|---|---|---|---|---|---|
| Artikelnummer | Hijsvermogen | Trekvermogen | Staaldraad | Treksterkte | Min breeklast draad | Slag | Netto gewicht | Gewicht staaldraad |
| Article code | Lifting capacity | Pulling capacity | Steel cable | Tensile strength | Min breaking strength of cable | Forward travel | Net weight | Weight steel cable |
| | ton | ton | Ømm | N/mm² | kN | mm | kg | kg* |
| DC.0.0240000800 | 0.8 | 1.2 | 8.3 | 1770 | 43.31 | ≈52 | 9 | 8 |
| DC.0.0240001600 | 1.6 | 2.4 | 11 | 1770 | 76.24 | ≈55 | 15 | 18 |
| DC.0.0240003200 | 3.2 | 4 | 16 | 1770 | 161.3 | ≈28 | 29 | 24 |

* voor 20m kabel / for 20m cable

| Specificaties / Specifications | |
|---|---|
| Bedrijfstemperatuur / Operating temperature | -10°C - +50°C |
| Ladingtype / Load type | Alleen voor goederen, niet geschikt om personen te hijsen / Goods, may not be used to lift people |
| Overlastbeveiliging / Overload protection | Breekpen overlastbeveiliging / Shear bolt overload protection |

| Afmetingen / Dimensions | | | | | | |
|---|---|---|---|---|---|---|
| Capaciteit / Capacity ton | A | B | C | D | E | F |
| 0.8 | 440 | 265 | 63 | 800 | - | 22 |
| 1.6 | 550 | 300 | 77 | 800 | 1200 | 25 |
| 3.2 | 690 | 350 | 91 | 800 | 1200 | 30 |

# Type Delta BHW

Handlier BHW / Manual Winch BHW

CE

## Eigenschappen

- Geschikt voor hijs- en trekwerkzaamheden.
- Met automatische lastdrukrem.
- Efficiënte tandwieloverbrenging minimaliseert de vereiste inspanning van de bediener.
- Compact ontwerp met afneembare hendel.
- Comfortabel hendel met gemakkelijke grip.
- Minimale belasting: 3% van de WLL.
- Roestvrijstalen versie gemaakt van 304(V2A) staal (behalve pal).
- Geleverd zonder staalkabel.
- Voldoet aan de Machinerichtlijn 2006/42/EG. Geleverd met testcertificaat, CE-conformiteitsverklaring en gebruiksaanwijzing.

## Features

- Suitable for lifting and pulling applications.
- With automatic load pressure break.
- Efficient gearing minimises the required operator effort.
- Compact design with detachable lever.
- Comfortable handle with easy grip.
- Minimum load: 3% of WLL.
- Stainless steel version made from 304(V2A) steel (except pawl).
- Supplied without steel cable.
- Complies with the Machinery Directive 2006/42/EC. Supplied with test certificate, CE declaration of conformity and operating instructions.



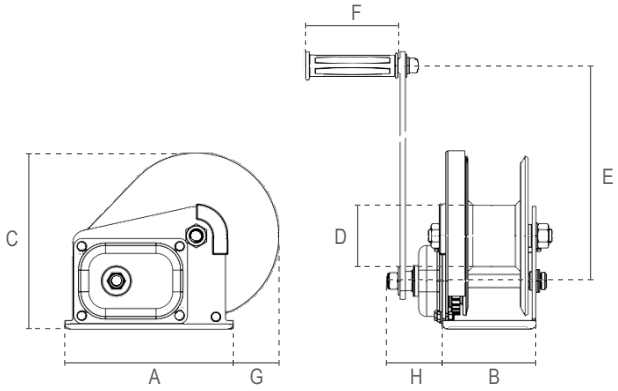


| Specificaties / Specifications | | | | | | | |
|---|---|---|---|---|---|---|---|
| Artikelnummer | Capaciteit | | Materiaal | Inspanning voor max lading | Tandwielverhouding | Aanbevolen staalkabel | Gewicht |
| Article code | Capacity | | Material | Effort for max load | Gear ratio | Recommended steel cable | Weight |
| | 1e laag / 1st layer | bovenste laag / topmost layer | | | | 19x7 1960 N/mm² | |
| | ton | | | N | | m x Ømm | kg |
| DS.0.BHW.1200 | 0.55 | 0.39 | Gegalvaniseerd staal / Galvanized steel | 180 | 4:1 | 20 x 5 | 3.3 |
| DS.0.BHW.1800 | 0.82 | 0.56 | | 190 | 5:1 | 20 x 7 | 8 |
| DS.0.BHW.2600 | 1.2 | 0.84 | | 190 | 9:1 | 13 x 8 | 11.5 |
| DS.0.BHW.1200RV | 0.44 | 0.31 | Roestvrij staal / Stainless steel | 180 | 4:1 | 20 x 5 | 3.3 |
| DS.0.BHW.1800RV | 0.66 | 0.45 | | 190 | 5:1 | 20 x 7 | 8 |
| DS.0.BHW.2600RV | 0.96 | 0.67 | | 190 | 9:1 | 13 x 8 | 11.5 |

| Specificaties / Specifications | |
|---|---|
| Ladingtype / Load type | Alleen voor goederen, niet geschikt om personen te hijsen / Goods, may not be used to lift people |
| Overlastbeveiliging / Overload protection | Zonder overlastbeveiliging / No overload protection |

| Afmetingen / Dimensions | | | | | | | | |
|---|---|---|---|---|---|---|---|---|
| Artikelnummer / Article code | A | B | C | D | E | F | G | H |
| DS.0.BHW.1200 (RV) | 138 | 88 | 156 | 48 | 208 | 110 | 46 | 57 |
| DS.0.BHW.1800 (RV) | 193 | 107 | 203 | 60 | 319 | 110 | 53 | 60 |
| DS.0.BHW.2600 (RV) | 240 | 127 | 216 | 75 | 319 | 110 | 54 | 63 |

# Type Delta HW

Handlier HW / Manual Winch HW




## Eigenschappen

- Geschikt voor hijs- en trekwerkzaamheden.
- Geremd door wormwiel tandwielen.
- Efficiënte tandwieloverbrenging minimaliseert de vereiste inspanning van de bediener.
- Compact ontwerp met afneembare hendel.
- Comfortabel hendel met gemakkelijke grip.
- Geleverd zonder staalkabel.
- Voldoet aan de Machinerichtlijn 2006/42/EG. Geleverd met testcertificaat, CE-conformiteitsverklaring en gebruiksaanwijzing.

## Features

- Suitable for lifting and pulling applications.
- Breaking action through worm wheel gearing.
- Efficient gearing minimises the required operator effort.
- Compact design with detachable lever.
- Comfortable handle with easy grip.
- Supplied without steel cable.
- Complies with the Machinery Directive 2006/42/EC. Supplied with test certificate, CE declaration of conformity and operating instructions.

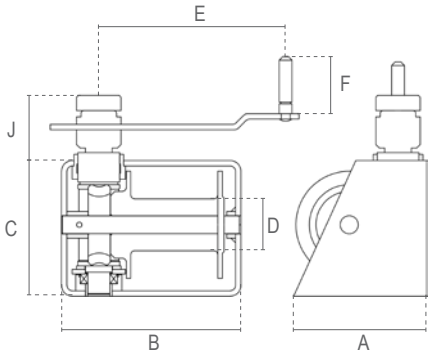


| Specificaties / Specifications | | | | | | |
|---|---|---|---|---|---|---|
| Artikelnummer | Capaciteit | | Inspanning voor max lading | Tandwielverhouding | Aanbevolen staalkabel | Gewicht |
| Article code | Capacity | | Effort for max load | Gear ratio | Recommended steel cable | Weight |
| | 1e laag / 1st layer | bovenste laag / topmost layer | | | 19x7 1960 N/mm² | |
| | ton | | N | | m x Ømm | kg |
| DS.0.HW.0250 | 0.25 | 0.17 | 180 | 15:1 | 20 x 5 | 11 |
| DS.0.HW.0500 | 0.5 | 0.34 | 180 | 21:1 | 25 x 7 | 18 |
| DS.0.HW.1000 | 1 | 0.7 | 180 | 26:1 | 35 x 8 | 27 |

| Specificaties / Specifications | |
|---|---|
| Ladingtype / Load type | Alleen voor goederen, niet geschikt om personen te hijsen / Goods, may not be used to lift people |
| Overlastbeveiliging / Overload protection | Zonder overlastbeveiliging / No overload protection |

| Afmetingen / Dimensions | | | | | | | |
|---|---|---|---|---|---|---|---|
| Capaciteit / Capacity ton | A | B | C | D | E | F | J |
| 0.25 | 150 | 200 | 150 | 57 | 240 | 130 | 65 |
| 0.5 | 180 | 260 | 180 | 69 | 240 | 130 | 65 |
| 1 | 300 | 300 | 280 | 105 | 370 | 370 | 80 |

# Type Delta RHW

Handlier RHW / Manual Winch RHW




## Eigenschappen

- Alleen geschikt voor trekwerkzaamheden.
- Met automatische lastdrukrem.
- Efficiënte tandwieloverbrenging minimaliseert de vereiste inspanning van de bediener.
- Compact ontwerp met afneembare hendel.
- Comfortabel hendel met gemakkelijke grip.
- Minimale belasting: 2% van de WLL.
- Geleverd zonder staalkabel.
- Voldoet aan de Machinerichtlijn 2006/42/EG. Geleverd met testcertificaat, CE-conformiteitsverklaring en gebruiksaanwijzing.

## Features

- Only suitable for pulling applications.
- With automatic load pressure break and free spooling-mode.
- Efficient gearing minimises the required operator effort.
- Compact design with detachable lever.
- Comfortable handle with easy grip.
- Minimum load: 2% of WLL.
- Supplied without steel cable.
- Complies with the Machinery Directive 2006/42/EC. Supplied with test certificate, CE declaration of conformity and operating instructions.

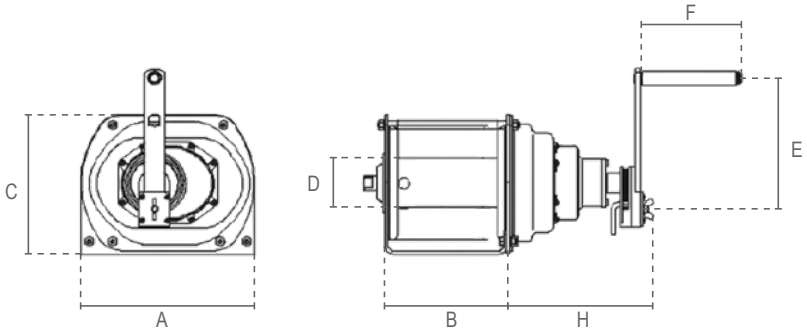


| Specificaties / Specifications | | | | | | |
|---|---|---|---|---|---|---|
| Artikelnummer | Capaciteit | | Inspanning voor max lading | Tandwielverhouding | Aanbevolen staalkabel | Gewicht |
| Article code | Capacity | | Effort for max load | Gear ratio | Recommended steel cable | Weight |
| | 1e laag / 1st layer | bovenste laag / topmost layer | | | 19x7 1960 N/mm² | |
| | ton | | N | | m x Ømm | kg |
| DS.0.RHW.0500 | 0.5 | 0.34 | 120 | 4:1 | 22 x 6 | 14 |
| DS.0.RHW.1000 | 1 | 0.71 | 120 | 12:1 | 25 x 8 | 19 |
| DS.0.RHW.2000 | 2 | 1.45 | 130 | 22:1 | 30 x 9 | 25 |
| DS.0.RHW.3000 | 3 | 2.13 | 180 | 29:1 | 30 x 10 | 52 |

| Specificaties / Specifications | |
|---|---|
| Ladingtype / Load type | Alleen voor goederen, niet geschikt om personen te hijsen / Goods, may not be used to lift people |
| Overlastbeveiliging / Overload protection | Zonder overlastbeveiliging / No overload protection |

| Afmetingen / Dimensions | | | | | | | |
|---|---|---|---|---|---|---|---|
| Capaciteit / Capacity ton | A | B | C | D | E | F | H |
| 0.5 | 245 | 178 | 182 | 60 | 350 | 150 | 147 |
| 1 | 266 | 191 | 214 | 76 | 350 | 150 | 170 |
| 2 | 300 | 302 | 230 | 90 | 350 | 150 | 103 |
| 3 | 365 | 356 | 296 | 100 | 350 | 150 | 103 |




www.DECORLUX.be
HIJSTECHNIEK
TECHNIQUE LEVAGE
HEBETECHNIK
LIFTING TECHNICS

# Loopkatten
# Trolleys

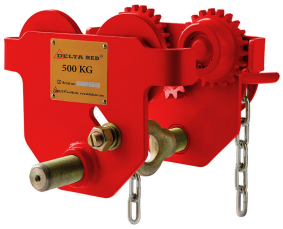

Duwloopkat / Kettingloopkat Push Trolley / Geared Trolley

## Type Delta RPT



Duwloopkat / Kettingloopkat Push Trolley / Geared Trolley

## Type Delta YPT



Vonkvrije Duwloopkat / Kettingloopkat Sparkproof Push Trolley / Geared Trolley

## Type Delta SPT



RVS Duwloopkat / Kettingloopkat Stainless Steel Push Trolley / Geared Trolley

## Type Delta IPT | IGT



Spindel Loopkat Trolley Clamp

## Type Delta BST

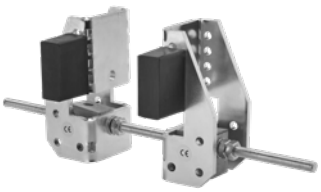

Katbuffer Trolley Buffer

## Type Delta DHST

# Type Delta RPT

## Duwloopkat / Push Trolley




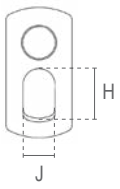


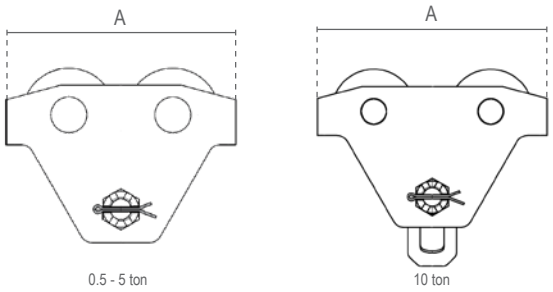


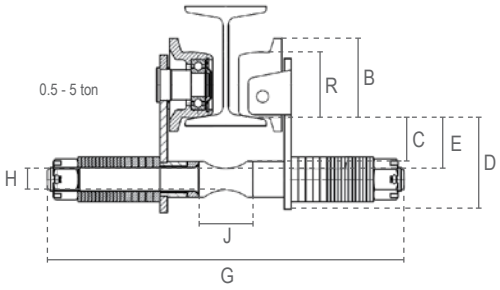


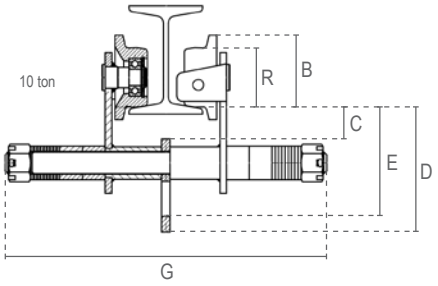


## Eigenschappen

- Verstelbaar door aanpassen van de vulringen.
- Afbreukbeveiligingsbeugels dienen als val-, breek- en stootbeveiliging. Bovendien uitgerust met kantelbeveiliging.
- Permanent gesmeerde, kogel gelagerde wielen zorgen voor een soepele verplaatsing.
- Geschikt voor de meeste I- en H-balken.
- Voldoet aan de Machinerichtlijn 2006/42/EG. Geleverd met testcertificaat, CE-conformiteitsverklaring en gebruiksaanwijzing.

## Features

- Customisable by adjusting the spacers.
- Safety bars serve as fall-, breaking- and impact protection. Additionally equipped with tilting protection.
- Permanently lubricated, ball bearing mounted wheels allow for smooth traversing.
- Suitable for most I- and H-beam profiles.
- Complies with the Machinery Directive 2006/42/EC. Supplied with test certificate, CE declaration of conformity and operating instructions.

| Specificaties / Specifications | | | | | | |
|---|---|---|---|---|---|---|
| Artikelnummer | Capaciteit | Test load | Geschikte balkbreedte | Min. radius | Wiel diameter (R) | Netto gewicht |
| Article code | Capacity | Test load | Suitable beam width | Min. radius | Wheel diameter (R) | Net weight |
| | ton | ton | mm | m | mm | kg |
| DR.0.03600500 | 0.5 | 0.625 | 68-305 | 0.6 | 55 | 6.2 |
| DR.0.03601000 | 1 | 1.25 | 68-305 | 0.8 | 70 | 10.2 |
| DR.0.03602000 | 2 | 2.5 | 88-305 | 1 | 85 | 17 |
| DR.0.03603000 | 3 | 3.75 | 110-305 | 1.4 | 105 | 28.5 |
| DR.0.03605000 | 5 | 6.25 | 116-305 | 1 | 117 | 42.6 |
| DR.0.03610000 | 10 | 12.5 | 130-305 | 1.2 | 150 | 89.8 |

| Specificaties / Specifications | |
|---|---|
| Bedrijfstemperatuur / Operating temperature | -10°C - +60°C |
| Ladingtype / Load type | Alleen voor goederen, niet geschikt om personen te hijsen / Goods, may not be used to lift people |

| Afmetingen / Dimensions | | | | | | | | |
|---|---|---|---|---|---|---|---|---|
| Capaciteit / Capacity | A | B | C | D | E | G | H | J |
| ton | | | | | | | | |
| 0.5 | 212 | 67 | 37 | 77 | 43 | 399 | 18 | 56 |
| 1 | 248 | 83 | 42 | 93 | 48 | 412 | 22 | 65 |
| 2 | 293 | 100 | 44 | 101 | 51 | 431 | 27 | 82 |
| 3 | 350 | 123 | 52 | 122 | 60 | 450 | 34 | 90 |
| 5 | 382 | 136 | 58 | 138 | 66 | 480 | 40 | 100 |
| 10 | 467 | 165 | 40 | 318 | 273 | 513 | 72 | 115 |

# Type Delta RGT

## Kettingloopkat / Geared Trolley

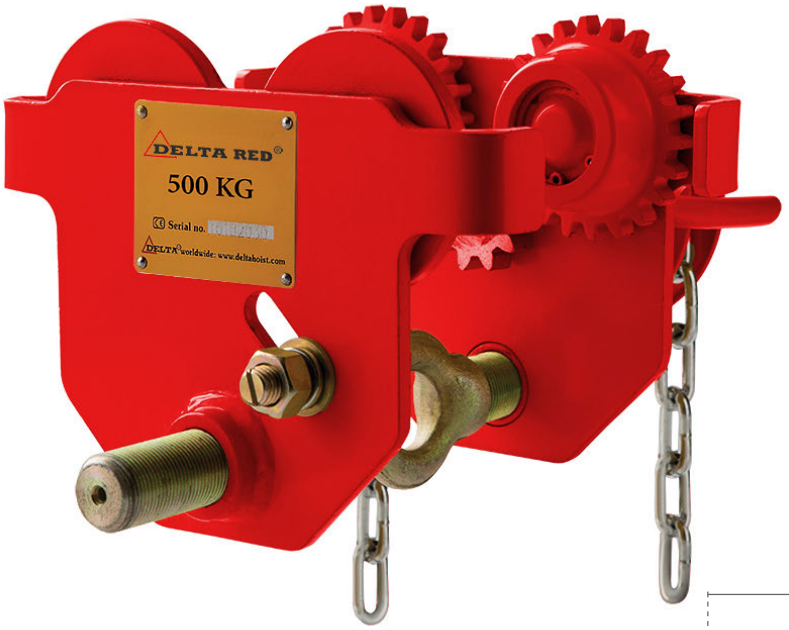


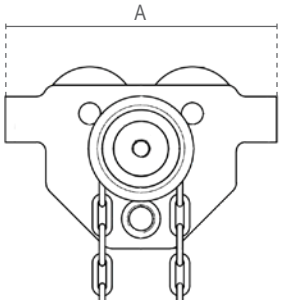


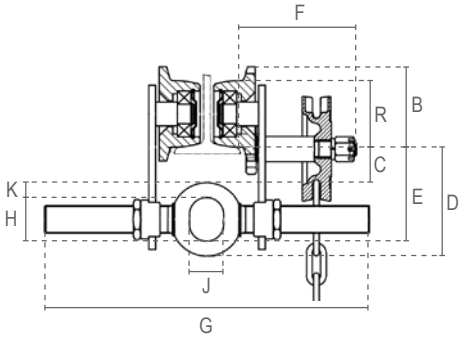


## Eigenschappen

- Individueel af te stellen door middel van de draaibare schroefdraad as.
- Afbreukbeveiligingsbeugels dienen als val-, breek- en stootbeveiliging. Bovendien uitgerust met kantelbeveiliging.
- Permanent gesmeerde, kogel gelagerde wielen zorgen voor een soepele verplaatsing.
- Geschikt voor de meeste I- en H-balken.
- Standaard met handketting voor 3 meter werkhoogte.
- Voldoet aan de Machinerichtlijn 2006/42/EG. Geleverd met testcertificaat, CE-conformiteitsverklaring en gebruiksaanwijzing.

## Features

- Individually adjustable by turning the bolt.
- Safety bars serve as fall-, breaking- and impact protection. Additionally equipped with tilting protection.
- Permanently lubricated, ball bearing mounted wheels allow for smooth traversing.
- Suitable for most I- and H-beam profiles.
- Standard with hand chain for 3 meter operating height.
- Complies with the Machinery Directive 2006/42/EC. Supplied with test certificate, CE declaration of conformity and operating instructions.

| Specificaties / Specifications | | | | | | |
|---|---|---|---|---|---|---|
| Artikelnummer | Capaciteit | Test load | Geschikte balkbreedte | Min. radius | Wiel diameter (R) | Netto gewicht |
| Article code | Capacity | Test load | Suitable beam width | Min. radius | Wheel diameter (R) | Net weight |
| | ton | ton | mm | m | mm | kg |
| DR.0.02700500 | 0.5 | 0.625 | 50-305 | 0.5 | 55 | 8.9 |
| DR.0.02701000 | 1 | 1.25 | 58-305 | 0.7 | 68 | 13 |
| DR.0.02702000 | 2 | 2.5 | 66-305 | 0.9 | 80 | 17.8 |
| DR.0.02703000 | 3 | 3.75 | 74-305 | 1.2 | 100 | 29.1 |
| DR.0.02705000 | 5 | 6.25 | 90-305 | 1 | 120 | 46.1 |

| Specificaties / Specifications | |
|---|---|
| Bedrijfstemperatuur / Operating temperature | -10°C - +60°C |
| Ladingtype / Load type | Alleen voor goederen, niet geschikt om personen te hijsen / Goods, may not be used to lift people |

| Afmetingen / Dimensions | | | | | | | | | | |
|---|---|---|---|---|---|---|---|---|---|---|
| Capaciteit / Capacity ton | A | B | C | D | E | F | G | H | J | K |
| 0.5 | 198 | 68 | 40 | 94 | 82 | 103 | 385 | 28 | 25 | 13 |
| 1 | 238 | 82 | 31 | 102 | 85 | 103 | 388 | 37 | 29 | 17 |
| 2 | 277 | 95 | 31 | 119 | 99 | 103 | 405 | 48 | 36 | 20 |
| 3 | 324 | 116 | 31 | 139 | 113 | 136 | 429 | 56 | 46 | 26 |
| 5 | 373 | 138 | 40 | 161 | 133 | 140 | 435 | 65 | 52 | 28 |

# Type Delta YPT

## Duwloopkat / Push Trolley




DY.0.036

» Beschikbaar in het zwart.
» Available with black paint.



DB.0.036

DELTA BLACK®

## Eigenschappen

» Individueel af te stellen door middel van de draaibare schroefdraad as.
» Afbreukbeveiligingsbeugels dienen als val-, breek- en stootbeveiliging. Bovendien uitgerust met kantelbeveiliging.
» Permanent gesmeerde, kogel gelagerde wielen zorgen voor een soepele verplaatsing.
» Geschikt voor de meeste I- en H-balken.
» Voldoet aan de Machinerichtlijn 2006/42/EG. Geleverd met testcertificaat, CE-conformiteitsverklaring en gebruiksaanwijzing.

## Features

» Individually adjustable by turning the bolt.
» Safety bars serve as fall-, breaking- and impact protection. Additionally equipped with tilting protection.
» Permanently lubricated, ball bearing mounted wheels allow for smooth traversing.
» Suitable for most I- and H-beam profiles.
» Complies with the Machinery Directive 2006/42/EC. Supplied with test certificate, CE declaration of conformity and operating instructions.

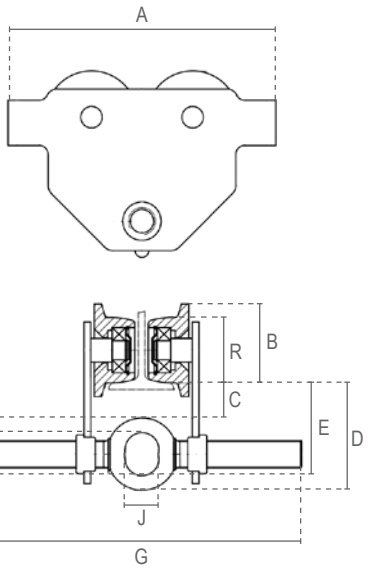


| Specificaties / Specifications | | | | | | |
|---|---|---|---|---|---|---|
| Artikelnummer | Capaciteit | Test load | Geschikte balkbreedte | Min. radius | Wiel diameter (R) | Netto gewicht |
| Article code | Capacity | Test load | Suitable beam width | Min. radius | Wheel diameter (R) | Net weight |
| | ton | ton | mm | m | mm | kg |
| DY.0.036000500 | 0.5 | 0.625 | 50-305 | 0.5 | 55 | 5.4 |
| DY.0.036001000 | 1 | 1.25 | 58-305 | 0.7 | 68 | 9.3 |
| DY.0.036002000 | 2 | 2.5 | 66-305 | 0.9 | 80 | 14.8 |
| DY.0.036003000 | 3 | 3.75 | 74-305 | 1.2 | 100 | 24.1 |
| DY.0.036005000 | 5 | 6.25 | 90-305 | 1 | 120 | 41.1 |

| Specificaties / Specifications | |
|---|---|
| Bedrijfstemperatuur / Operating temperature | -10°C - +60°C |
| Ladingtype / Load type | Alleen voor goederen, niet geschikt om personen te hijsen / Goods, may not be used to lift people |

| Afmetingen / Dimensions | | | | | | | | | |
|---|---|---|---|---|---|---|---|---|---|
| Capaciteit / Capacity ton | A | B | C | D | E | G | H | J | K |
| 0.5 | 198 | 68 | 40 | 94 | 82 | 385 | 28 | 25 | 13 |
| 1 | 238 | 82 | 31 | 102 | 85 | 388 | 37 | 29 | 17 |
| 2 | 277 | 95 | 31 | 119 | 99 | 405 | 48 | 36 | 20 |
| 3 | 324 | 116 | 31 | 139 | 113 | 429 | 56 | 46 | 26 |
| 5 | 373 | 138 | 40 | 161 | 133 | 435 | 65 | 52 | 28 |

# Type Delta YGT

## Kettingloopkat / Geared Trolley

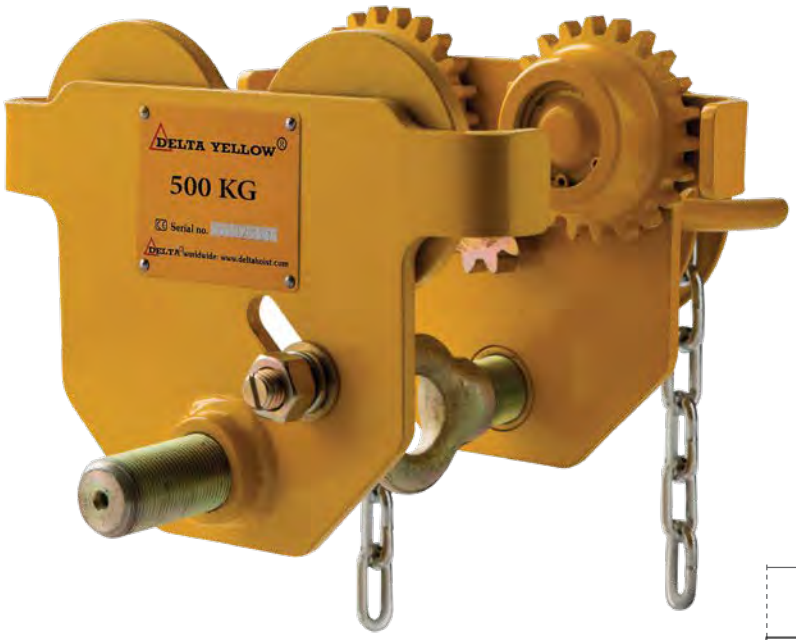


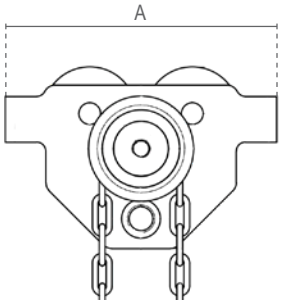


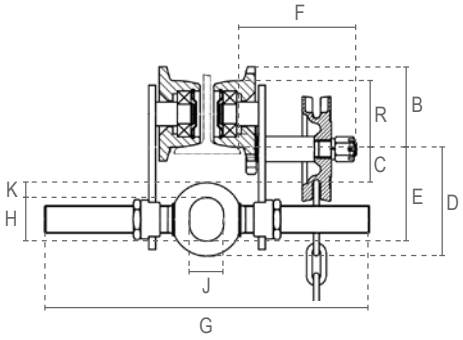


## Eigenschappen

- Individueel af te stellen door middel van de draaibare schroefdraad as.
- Afbreukbeveiligingsbeugels dienen als val-, breek- en stootbeveiliging. Bovendien uitgerust met kantelbeveiliging.
- Permanent gesmeerde, kogel gelagerde wielen zorgen voor een soepele verplaatsing.
- Geschikt voor de meeste I- en H-balken.
- Standaard met handketting voor 3 meter werkhoogte.
- Voldoet aan de Machinerichtlijn 2006/42/EG. Geleverd met testcertificaat, CE-conformiteitsverklaring en gebruiksaanwijzing.

## Features

- Individually adjustable by turning the bolt.
- Safety bars serve as fall-, breaking- and impact protection. Additionally equipped with tilting protection.
- Permanently lubricated, ball bearing mounted wheels allow for smooth traversing.
- Suitable for most I- and H-beam profiles.
- Standard with hand chain for 3 meter operating height.
- Complies with the Machinery Directive 2006/42/EC. Supplied with test certificate, CE declaration of conformity and operating instructions.

| Specificaties / Specifications | | | | | | |
|---|---|---|---|---|---|---|
| Artikelnummer | Capaciteit | Test load | Geschikte balkbreedte | Min. radius | Wiel diameter (R) | Netto gewicht |
| Article code | Capacity | Test load | Suitable beam width | Min. radius | Wheel diameter (R) | Net weight |
| | ton | ton | mm | m | mm | kg |
| DY.0.037000500 | 0.5 | 0.625 | 50-305 | 0.5 | 55 | 8.9 |
| DY.0.037001000 | 1 | 1.25 | 58-305 | 0.7 | 68 | 13 |
| DY.0.037002000 | 2 | 2.5 | 66-305 | 0.9 | 80 | 17.8 |
| DY.0.037003000 | 3 | 3.75 | 74-305 | 1.2 | 100 | 29.1 |
| DY.0.037005000 | 5 | 6.25 | 90-305 | 1 | 120 | 46.1 |

| Specificaties / Specifications | |
|---|---|
| Bedrijfstemperatuur / Operating temperature | -10°C - +60°C |
| Ladingtype / Load type | Alleen voor goederen, niet geschikt om personen te hijsen / Goods, may not be used to lift people |

| Afmetingen / Dimensions | | | | | | | | | | |
|---|---|---|---|---|---|---|---|---|---|---|
| Capaciteit / Capacity ton | A | B | C | D | E | F | G | H | J | K |
| 0.5 | 198 | 68 | 40 | 94 | 82 | 103 | 385 | 28 | 25 | 13 |
| 1 | 238 | 82 | 31 | 102 | 85 | 103 | 388 | 37 | 29 | 17 |
| 2 | 277 | 95 | 31 | 119 | 99 | 103 | 405 | 48 | 36 | 20 |
| 3 | 324 | 116 | 31 | 139 | 113 | 136 | 429 | 56 | 46 | 26 |
| 5 | 373 | 138 | 40 | 161 | 133 | 140 | 435 | 65 | 52 | 28 |

# Type Delta SPT

## Vonkvrije Duwloopkat / Sparkproof Push Trolley




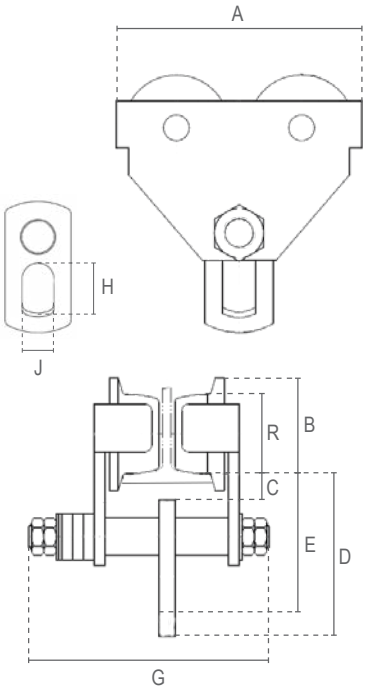


## Eigenschappen

- Geschikt voor potentieel gevaarlijke en explosieve omgevingen.
- Volledig verkoperd, met verbronzde wielen.
- Verstelbaar door aanpassen van de vulringen.
- Afbreukbeveiligingsbeugels dienen als val-, breek- en stootbeveiliging. Bovendien uitgerust met kantelbeveiliging.
- Permanent gesmeerde, kogel gelagerde wielen zorgen voor een soepele verplaatsing.
- Geschikt voor de meeste I- en H-balken.
- Voldoet aan de Machinerichtlijn 2006/42/EG. Geleverd met testcertificaat, CE-conformiteitsverklaring en gebruiksaanwijzing.

## Features

- Suitable for potentially dangerous and explosive environments.
- Completely copper-plated, with bronze-plated wheels.
- Customisable by adjusting the spacers.
- Safety bars serve as fall-, breaking- and impact protection. Additionally equipped with tilting protection.
- Permanently lubricated, ball bearing mounted wheels allow for smooth traversing.
- Suitable for most I- and H-beam profiles.
- Complies with the Machinery Directive 2006/42/EC. Supplied with test certificate, CE declaration of conformity and operating instructions.

| Specificaties / Specifications | | | | | | |
|---|---|---|---|---|---|---|
| Artikelnummer | Capaciteit | Test load | Geschikte balkbreedte | Min. radius | Wiel diameter (R) | Netto gewicht |
| Article code | Capacity | Test load | Suitable beam width | Min. radius | Wheel diameter (R) | Net weight |
| | ton | ton | mm | m | mm | kg |
| DC.0.03200500 | 0.5 | 0.625 | 64-140 | 0.6 | 58 | 7 |
| DC.0.03201000 | 1 | 1.25 | 64-140 | 0.8 | 75 | 12 |
| DC.0.03202000 | 2 | 2.5 | 76-165 | 1.1 | 90 | 20.5 |
| DC.0.03203000 | 3 | 3.75 | 76-305 | 1.4 | 110 | 36.8 |
| DC.0.03205000 | 5 | 6.25 | 88-305 | 1 | 122 | 56 |
| DC.0.03210000 | 10 | 12.5 | 125-305 | 1.3 | 151 | 91.9 |
| DC.0.03220000 | 20 | 25 | 136-305 | 4.7 | 200 | 230.8 |

| Specificaties / Specifications | |
|---|---|
| ATEX zone / ATEX zone | ATEX Zone 1 CE EX II 2G h IIC T4 / 2D h IIIC T135°C |
| Bedrijfstemperatuur / Operating temperature | -10°C - +60°C |
| Ladingtype / Load type | Alleen voor goederen, niet geschikt om personen te hijsen / Goods, may not be used to lift people |

| Afmetingen / Dimensions | | | | | | | | |
|---|---|---|---|---|---|---|---|---|
| Capaciteit / Capacity | A | B | C | D | E | G | H | J |
| ton | | | | | | | | |
| 0.5 | 212 | 70 | 28 | 128 | 113 | 230 | 38 | 24 |
| 1 | 255 | 88 | 25 | 143 | 128 | 254 | 50 | 30 |
| 2 | 302 | 105 | 27 | 172 | 152 | 294 | 60 | 36 |
| 3 | 344 | 126 | 32 | 212 | 186 | 446 | 75 | 45 |
| 5 | 378 | 141 | 34 | 254 | 224 | 468 | 95 | 60 |
| 10 | 455 | 170 | 37 | 322 | 275 | 505 | 120 | 82 |
| 20 | 642 | 238 | 54 | 384 | 314 | 549 | 150 | 110 |

# Type Delta SGT

## Vonkvrije Kettingloopkat / Sparkproof Geared Trolley




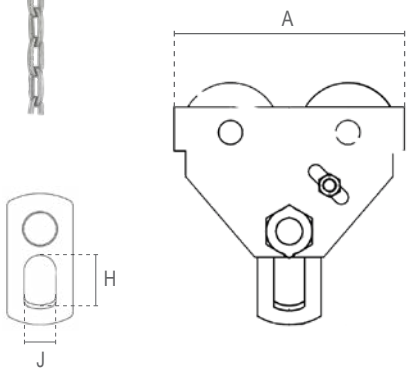


## Eigenschappen

- Geschikt voor potentieel gevaarlijke en explosieve omgevingen.
- Volledig verkoperd, met verbronzde wielen.
- Verstelbaar door aanpassen van de vulringen.
- Afbreukbeveiligingsbeugels dienen als val-, breek- en stootbeveiliging. Bovendien uitgerust met kantelbeveiliging.
- Permanent gesmeerde, kogel gelagerde wielen zorgen voor een soepele verplaatsing.
- Geschikt voor de meeste I- en H-balken.
- Standaard met handketting voor 3 meter werkhoogte.
- Voldoet aan de Machinerichtlijn 2006/42/EG. Geleverd met testcertificaat, CE-conformiteitsverklaring en gebruiksaanwijzing.

## Features

- Suitable for potentially dangerous and explosive environments.
- Completely copper-plated, with bronze-plated wheels.
- Customisable by adjusting the spacers.
- Safety bars serve as fall-, breaking- and impact protection. Additionally equipped with tilting protection.
- Permanently lubricated, ball bearing mounted wheels allow for smooth traversing.
- Suitable for most I- and H-beam profiles.
- Standard with hand chain for 3 meter operating height.
- Complies with the Machinery Directive 2006/42/EC. Supplied with test certificate, CE declaration of conformity and operating instructions.

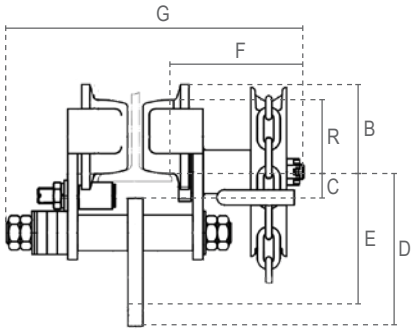


| Specificaties / Specifications | | | | | | |
|---|---|---|---|---|---|---|
| Artikelnummer | Capaciteit | Test load | Geschikte balkbreedte | Min. radius | Wiel diameter (R) | Netto gewicht |
| Article code | Capacity | Test load | Suitable beam width | Min. radius | Wheel diameter (R) | Net weight |
| | ton | ton | mm | m | mm | kg |
| DC.0.03300500 | 0.5 | 0.625 | 64-140 | 0.6 | 58 | 11.6 |
| DC.0.03301000 | 1 | 1.25 | 64-140 | 0.8 | 75 | 17 |
| DC.0.03302000 | 2 | 2.5 | 76-165 | 1.1 | 90 | 25.5 |
| DC.0.03303000 | 3 | 3.75 | 76-305 | 1.4 | 110 | 42.8 |
| DC.0.03305000 | 5 | 6.25 | 88-305 | 1 | 122 | 62 |
| DC.0.03310000 | 10 | 12.5 | 125-305 | 1.3 | 151 | 98.4 |
| DC.0.03320000 | 20 | 25 | 136-305 | 4.7 | 200 | 258.3 |

| Specificaties / Specifications | |
|---|---|
| ATEX zone / ATEX zone | ATEX Zone 1 CE EX II 2G h IIC T4 / 2D h IIIC T135°C |
| Bedrijfstemperatuur / Operating temperature | -10°C - +60°C |
| Ladingtype / Load type | Alleen voor goederen, niet geschikt om personen te hijsen / Goods, may not be used to lift people |

| Afmetingen / Dimensions | | | | | | | | | |
|---|---|---|---|---|---|---|---|---|---|
| Capaciteit / Capacity ton | A | B | C | D | E | F | G | H | J |
| 0.5 | 212 | 70 | 28 | 128 | 113 | 127 | 312 | 38 | 24 |
| 1 | 255 | 88 | 25 | 143 | 128 | 127 | 327 | 50 | 30 |
| 2 | 302 | 105 | 27 | 172 | 152 | 127 | 356 | 60 | 36 |
| 3 | 344 | 126 | 32 | 212 | 186 | 155 | 414 | 75 | 45 |
| 5 | 378 | 141 | 34 | 254 | 224 | 158 | 432 | 95 | 60 |
| 10 | 455 | 170 | 37 | 322 | 275 | 180 | 478 | 120 | 82 |
| 20 | 642 | 238 | 54 | 384 | 314 | 193 | 517 | 150 | 110 |

# Type Delta IPT

## RVS Duwloopkat / Stainless Steel Push Trolley






## Eigenschappen

- Hoge bescherming tegen corrosie en vocht.
- Geschikt voor 'clean rooms' en voedingsindustrie.
- Alle onderdelen, met uitzondering van de lagers, zijn gemaakt van hoogwaardig corrosiebestendig 304(V2A) roestvast staal.
- Verstelbaar door aanpassen van de vulringen.
- Afbreukbeveiligingsbeugels dienen als val-, breek- en stootbeveiliging. Bovendien uitgerust met kantelbeveiliging.
- Permanent gesmeerde, kogel gelagerde wielen zorgen voor een soepele verplaatsing.
- Geschikt voor de meeste I- en H-balken.
- Voldoet aan de Machinerichtlijn 2006/42/EG. Geleverd met testcertificaat, CE-conformiteitsverklaring en gebruiksaanwijzing.

## Features

- Maximum protection against corrosive and high humidity environments.
- Suitable for cleanrooms and food-industry applications.
- All parts (except bearings) made from highly corrosion resistant 304(V2A) stainless steel.
- Customisable by adjusting the spacers.
- Safety bars serve as fall-, breaking- and impact protection. Additionally equipped with tilting protection.
- Permanently lubricated, ball bearing mounted wheels allow for smooth traversing.
- Suitable for most I- and H-beam profiles.
- Complies with the Machinery Directive 2006/42/EC. Supplied with test certificate, CE declaration of conformity and operating instructions.

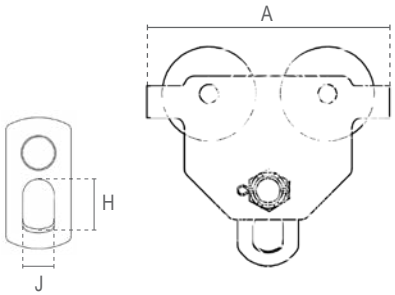


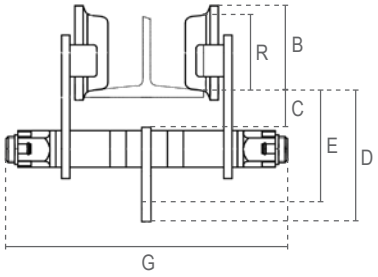


| Specificaties / Specifications | | | | | | |
|---|---|---|---|---|---|---|
| Artikelnummer | Capaciteit | Test load | Geschikte balkbreedte | Min. radius | Wiel diameter (R) | Netto gewicht |
| Article code | Capacity | Test load | Suitable beam width | Min. radius | Wheel diameter (R) | Net weight |
| | ton | ton | mm | m | mm | kg |
| DSS.0.02600500 | 0.5 | 0.74 | 50-152 | 0.8 | 57 | 9 |
| DSS.0.02601000 | 1 | 1.4 | 64-203 | 1 | 73 | 12 |
| DSS.0.02602000 | 2 | 2.9 | 88-203 | 1.1 | 86 | 20 |
| DSS.0.02603000 | 3 | 4.4 | 100-203 | 1.3 | 106 | 29 |
| DSS.0.02605000 | 5 | 6.1 | 114-203 | 1.4 | 118 | 44 |

| Specificaties / Specifications | |
|---|---|
| Bedrijfstemperatuur / Operating temperature | -10°C - +60°C |
| Ladingtype / Load type | Alleen voor goederen, niet geschikt om personen te hijsen / Goods, may not be used to lift people |

| Afmetingen / Dimensions | | | | | | | | |
|---|---|---|---|---|---|---|---|---|
| Capaciteit / Capacity ton | A | B | C | D | E | G | H | J |
| 0.5 | 199 | 68 | 30 | 119 | 104 | 245 | 32 | 25 |
| 1 | 246 | 84 | 27 | 145 | 127 | 327 | 40 | 30 |
| 2 | 276 | 97 | 27 | 171 | 156 | 345 | 52 | 38 |
| 3 | 332 | 119 | 37 | 200 | 178 | 367 | 63 | 40 |
| 5 | 377 | 131 | 38 | 228 | 198 | 378 | 75 | 50 |

# RVS Kettingloopkat / Stainless Steel Geared Trolley

## Eigenschappen

- Hoge bescherming tegen corrosie en vocht.
- Geschikt voor 'clean rooms' en voedingsindustrie.
- Alle onderdelen, met uitzondering van de lagers, zijn gemaakt van hoogwaardig corrosiebestendig 304(V2A) roestvast staal.
- Verstelbaar door aanpassen van de vulringen.
- Afbreukbeveiligingsbeugels dienen als val-, breek- en stootbeveiliging. Bovendien uitgerust met kantelbeveiliging.
- Permanent gesmeerde, kogel gelagerde wielen zorgen voor een soepele verplaatsing.
- Geschikt voor de meeste I- en H-balken.
- Standaard met handketting voor 3 meter werkhoogte.
- Voldoet aan de Machinerichtlijn 2006/42/EG. Geleverd met testcertificaat,

  CE-conformiteitsverklaring en gebruiksaanwijzing.

## Features

- Maximum protection against corrosive and high humidity environments.
- Suitable for cleanrooms and food-industry applications.
- All parts (except bearings) made from highly corrosion resistant 304(V2A) stainless steel.
- Customisable by adjusting the spacers.
- Safety bars serve as fall-, breaking- and impact protection. Additionally equipped with tilting protection.
- Permanently lubricated, ball bearing mounted wheels allow for smooth traversing.
- Suitable for most I- and H-beam profiles.
- Standard with hand chain for 3 meter operating height.
- Complies with the Machinery Directive 2006/42/EC. Supplied with test certificate, CE declaration of conformity and operating instructions.

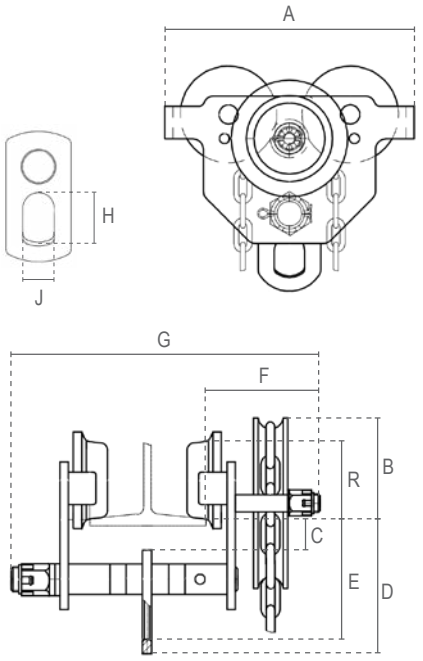


| Specificaties / Specifications | | | | | | |
|---|---|---|---|---|---|---|
| Artikelnummer | Capaciteit | Test load | Geschikte balkbreedte | Min. radius | Wiel diameter (R) | Netto gewicht |
| Article code | Capacity | Test load | Suitable beam width | Min. radius | Wheel diameter (R) | Net weight |
| | ton | ton | mm | m | mm | kg |
| DSS.0.027000500 | 0.5 | 0.74 | 50-152 | 0.8 | 57 | 12 |
| DSS.0.027001000 | 1 | 1.4 | 64-203 | 1 | 73 | 16 |
| DSS.0.027002000 | 2 | 2.9 | 88-203 | 1.1 | 86 | 23 |
| DSS.0.027003000 | 3 | 4.4 | 100-203 | 1.3 | 106 | 33 |
| DSS.0.027005000 | 5 | 6.1 | 114-203 | 1.4 | 118 | 48 |

| Specificaties / Specifications | |
|---|---|
| Bedrijfstemperatuur / Operating temperature | -10°C - +60°C |
| Ladingtype / Load type | Alleen voor goederen, niet geschikt om personen te hijsen / Goods, may not be used to lift people |

| Afmetingen / Dimensions | | | | | | | | | |
|---|---|---|---|---|---|---|---|---|---|
| Capaciteit / Capacity ton | A | B | C | D | E | F | G | H | J |
| 0.5 | 199 | 68 | 30 | 119 | 104 | 78 | 278 | 32 | 25 |
| 1 | 246 | 84 | 27 | 145 | 127 | 81 | 348 | 40 | 30 |
| 2 | 276 | 97 | 27 | 171 | 156 | 84 | 357 | 52 | 38 |
| 3 | 332 | 119 | 37 | 200 | 178 | 89 | 366 | 63 | 40 |
| 5 | 377 | 131 | 38 | 228 | 198 | 94 | 384 | 75 | 50 |

# Type Delta BST

Spindel Loopkat / Trolley Clamp



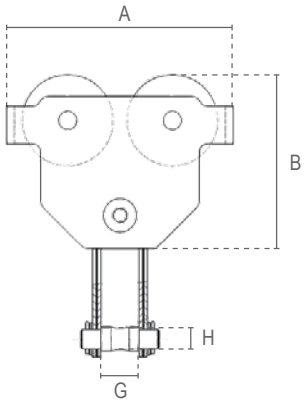


## Eigenschappen

- Extreem korte montagetijden. Ideaal voor snelle toepassingen die snelle bewegingen van de lading vereisen.
- Individueel af te stellen door middel van de draaibare schroefdraad spindel. Wordt beveiligd door de borghendel.
- Afbreukbeveiligingsbeugels dienen als val-, breek- en stootbeveiliging.
- Permanent gesmeerde, kogel gelagerde wielen zorgen voor een soepele verplaatsing.
- Geschikt voor de meeste I- en H-balken.
- Voldoet aan de Machinerichtlijn 2006/42/EG. Geleverd met testcertificaat, CE-conformiteitsverklaring en gebruiksaanwijzing.

## Features

- Extremely shortened assembly times. Ideal for fast applications that require load traversing.
- Individually adjustable by turning the threaded bolt. Secured by second counter safety lever.
- Safety bars serve as fall-, breaking- and impact protection.
- Permanently lubricated, ball bearing mounted wheels allow for smooth traversing.
- Suitable for most I- and H-beam profiles.
- Complies with the Machinery Directive 2006/42/EC. Supplied with test certificate, CE declaration of conformity and operating instructions.

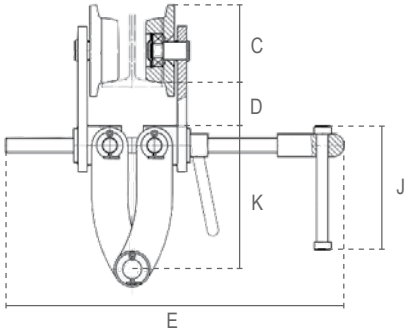


| Specificaties / Specifications | | | | | | |
|---|---|---|---|---|---|---|
| Artikelnummer | Capaciteit | Test load | Geschikte balkbreedte | Min. radius | Wiel diameter | Netto gewicht |
| Article code | Capacity | Test load | Suitable beam width | Min. radius | Wheel diameter | Net weight |
| | ton | ton | mm | m | mm | kg |
| ZM.LHTP.005C | 0.5 | 0.62 | 64-180 | 0.8 | 55 | 9 |
| ZM.LHTP.010C | 1 | 1.25 | 64-203 | 1 | 68 | 16 |
| ZM.LHTP.020C | 2 | 2.5 | 76-203 | 1.1 | 80 | 20 |
| ZM.LHTP.030C | 3 | 3.75 | 76-203 | 1.3 | 100 | 33 |
| ZM.LHTP.050C | 5 | 6.25 | 100-305 | 1.4 | 120 | 60 |
| ZM.LHTP.100C | 10 | 12.5 | 150-305 | 2.5 | 151 | 97 |

| Specificaties / Specifications | |
|---|---|
| Bedrijfstemperatuur / Operating temperature | -10°C - +50°C |
| Ladingtype / Load type | Alleen voor goederen, niet geschikt om personen te hijsen / Goods, may not be used to lift people |

| Afmetingen / Dimensions | | | | | | | | | |
|---|---|---|---|---|---|---|---|---|---|
| Capaciteit / Capacity | A | B | C | D | E | G | H | J | K |
| ton | | | | | | | | | |
| 0.5 | 198 | 246 | 68 | 52 | 299 | 30 | 19 | 130 | 113 |
| 1 | 242 | 297 | 82 | 46 | 355 | 40 | 22 | 130 | 150 |
| 2 | 281 | 318 | 95 | 52 | 360 | 40 | 22 | 130 | 145 |
| 3 | 328 | 351 | 116 | 55 | 360 | 45 | 24 | 130 | 148 |
| 5 | 377 | 455 | 138 | 57 | 470 | 58 | 28 | 130 | 214 |
| 10 | 455 | 500 | 170 | 70 | 480 | 80 | 42 | 130 | 215 |

# Type Delta DHST

Katbuffer / Trolley Buffer

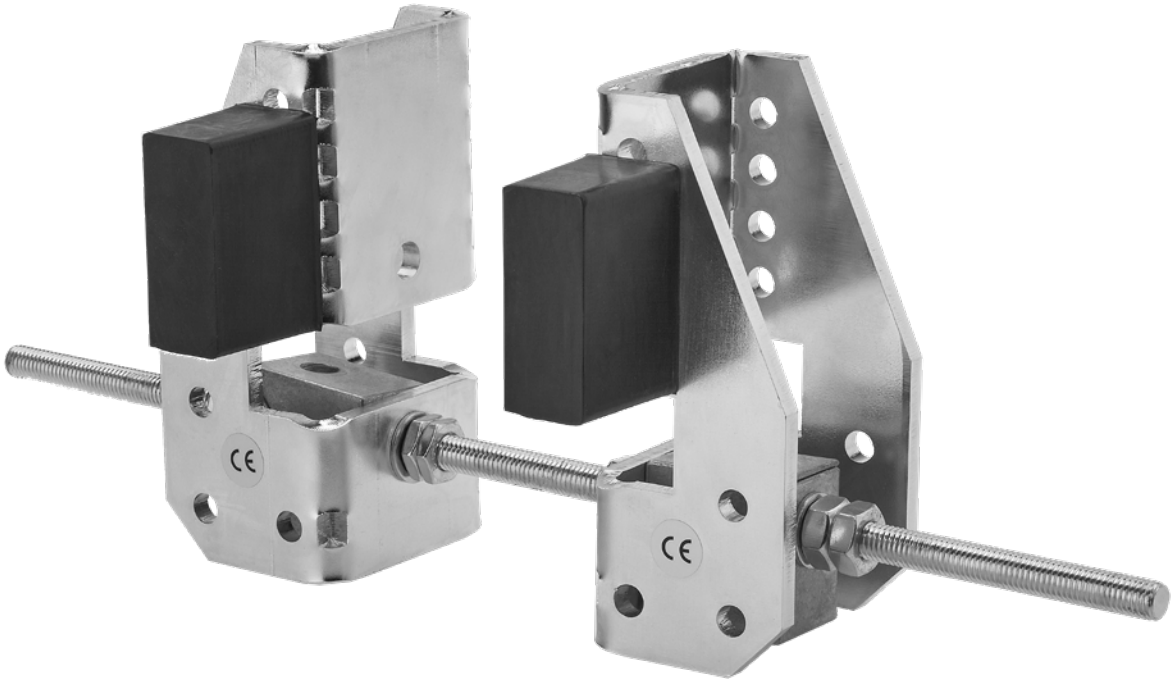

## Eigenschappen

- Universeel toepasbaar als eindstop of mobiele beperking van de loopkat.
- Eenvoudig te installeren zonder te boren of lassen.
- Geschikt voor alle DELTA hand- en elektrische loopkatten tot 10 ton uit deze catalogus.
- Geschikt voor de meeste I- en H-balken tot een balkdikte van 25mm.
- Voldoet aan de Machinerichtlijn 2006/42/EG. Geleverd met CE-conformiteitsverklaring en montage-instructies.

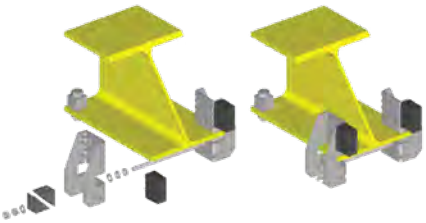

## Features

- Universally applicable as end stop or mobile limitation of the trolley.
- Easy and quick to install without drilling or welding.
- Suitable for all DELTA manual- and electric trolleys up to 10 ton from this catalog.
- Suitable for most I- and H-beam profiles up to 25mm beam thickness.
- Complies with the Machinery Directive 2006/42/EC. Supplied with CE declaration of conformity and assembly instructions.

| Specificaties / Specifications | | | |
|---|---|---|---|
| Artikelnummer | Geschikte balkbreedte | Netto gewicht | Lengte draadstang |
| Article code | Suitable beam width | Net weight | Length of threaded rod |
| | mm | kg | mm |
| DHST.006 | 82-300 | 2.5 | 370 |

| Specificaties / Specifications | | |
|---|---|---|
| Hijsmiddel capaciteit | Max. toegestaan gewicht van hijsmiddellen | Max. toegestane snelheid |
| Hoist capacity | Max. permitted weight of hoisting equipment | Max. permitted speed |
| ton | kg | m/min |
| < 2 | 160 | 25 |
| 2 | 250 | 20 |
| 3 | 250 | 20 |
| 4 | 250 | 20 |
| 5 | 400 | 20 |
| 6 | 400 | 20 |
| 8 | 900 | 16 |
| 10 | 900 | 16 |




www.DECORLUX.be
HIJSTECHNIEK
TECHNIQUE LEVAGE
HEBETECHNIK
LIFTING TECHNICS

# Hefmagneten
# Load Handling Equipment



Balkklem
Beam Clamp
## Type Delta BCS

Premium Hefmagneet
Premium Magnetic Lifter
## Type Delta PML





Hefmagneet
Magnetic Lifter
## Type Delta BML

# Type delta BCS

## Balkklem / Beam Clamp




DC.0.010

» Beschikbaar in het zwart.
» Available with black paint.

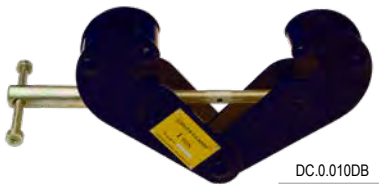

DC.0.010DB

## Eigenschappen

» Te gebruiken als verankering.
» Eenvoudig te gebruiken en groot klembereik.
» Individueel af te stellen door middel van de draaibare schroefdraad as.
» Voldoet aan de Machinerichtlijn 2006/42/EG. Geleverd met testcertificaat, CE-conformiteitsverklaring en gebruiksaanwijzing.

## Features

» Versatile application as a rigging point.
» Easy to use and wide clamping area.
» Individually adjustable by turning the threaded bolt.
» Complies with the Machinery Directive 2006/42/EC. Supplied with test certificate, CE declaration of conformity and operating instructions.

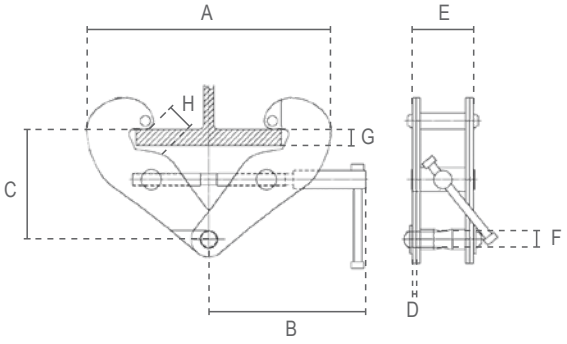


| Specificaties / Specifications | | | |
|---|---|---|---|
| Artikelnummer | Capaciteit | Geschikte balkbreedte | Netto gewicht |
| Article code | Capacity | Suitable beam width | Net weight |
| | ton | mm | kg |
| DC.0.0100001000 | 1 | 75-220 | 3.8 |
| DC.0.0100002000 | 2 | 75-220 | 4.6 |
| DC.0.0100003000 | 3 | 80-320 | 9 |
| DC.0.0100005000 | 5 | 80-320 | 11 |
| DC.0.0100010000 | 10 | 90-320 | 16 |
| DC.0.0100020000 | 20 | 90-370 | 39.6 |

| Specificaties / Specifications | |
|---|---|
| Bedrijfstemperatuur / Operating temperature | -10°C - +50°C |

| Afmetingen / Dimensions | | | | | | | | | | |
|---|---|---|---|---|---|---|---|---|---|---|
| Capaciteit / Capacity ton | A min | A max | B | C min | C max | D | E | F | G max | H |
| 1 | 180 | 360 | 215 | 102 | 155 | 5 | 74 | 22 | 20 | 25 |
| 2 | 180 | 360 | 215 | 102 | 155 | 6 | 76 | 22 | 20 | 25 |
| 3 | 235 | 490 | 260 | 140 | 225 | 8 | 103 | 24 | 20 | 37 |
| 5 | 235 | 490 | 260 | 140 | 225 | 10 | 110 | 28 | 20 | 37 |
| 10 | 320 | 505 | 260 | 170 | 225 | 12 | 120 | 40 | 20 | 40 |
| 20 | 512 | 713 | 431 | 315 | 361 | 16 | 196 | 70 | 20 | 40 |

# Type Delta PML

Premium Hefmagneet / Premium Magnetic Lifter




## Eigenschappen

» Geschikt voor het hijsen en hanteren van staalplaten, -blokken of -buizen.

» Magnetisch veld wordt geproduceerd door het draaien van de hendel.

Premium eigenschappen:

» Stalen blok beschermt de hendel tegen schokken.
» Meer stabiliteit door het vaste ophangoog.
» Veilige hantering door ontgrendeling op het huis (in plaats van aan de hendel).

» Voldoet aan de Machinerichtlijn 2006/42/EG. Geleverd met testcertificaat, CE-conformiteitsverklaring en gebruiksaanwijzing.

## Features

» Suitable for lifting and handling steel plates, -blocks or -pipes.

» Magnetic field is produced by turning the handle. Premium features:

» Steel block protects the lever from shocks.
» More stability due to fixed suspension eye.
» Safe handling by unlocking on the housing (instead of at the lever).

» Complies with the Machinery Directive 2006/42/EC. Supplied with test certificate, CE declaration of conformity and operating instructions.

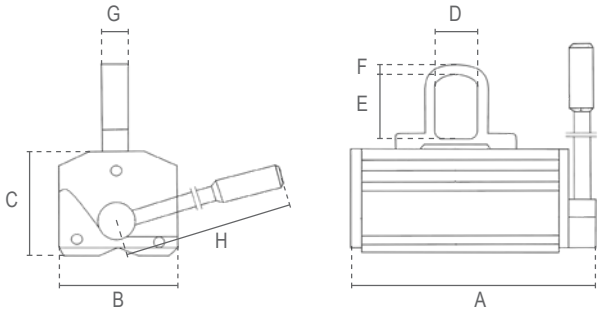


| Specificaties / Specifications | | | | |
|---|---|---|---|---|
| Artikelnummer | Capaciteit | | Min. plaatdikte | Netto gewicht |
| Article code | Capacity | | Min. plate thickness | Net weigtht |
| | Vlak materiaal / Flat material | Rond materiaal / Round material (50%) | | |
| | ton | | mm | kg |
| DC.0.QML.0100 | 0.1 | 0.05 | 15 | 4 |
| DC.0.QML.0300 | 0.3 | 0.15 | 20 | 11 |
| DC.0.QML.0600 | 0.6 | 0.3 | 30 | 21 |
| DC.0.QML.1000 | 1 | 0.5 | 40 | 42 |
| DC.0.QML.2000 | 2 | 1 | 60 | 105 |

| Specificaties / Specifications | |
|---|---|
| Bedrijfstemperatuur / Operating temperature | -40°C - +80°C |
| Veiligheids factor / Safety factor | 3.5 |
| Magneet type / Magnet type | Permanente NdFeB magneet / Permanent NdFeB magnet |

| Afmetingen / Dimensions | | | | | | | | |
|---|---|---|---|---|---|---|---|---|
| Capaciteit / Capacity ton | A | B | C | D | E | F | G | H |
| 0.1 | 137 | 62 | 66 | 21 | 32 | 8 | 15 | 120 |
| 0.3 | 199 | 90 | 95 | 38 | 50 | 11 | 22 | 175 |
| 0.6 | 263 | 115 | 107 | 42 | 58 | 13 | 25 | 225 |
| 1 | 303 | 150 | 147 | 50 | 64 | 18 | 29 | 266 |
| 2 | 417 | 190 | 195 | 56 | 76 | 21 | 37 | 415 |

# Type Delta BML

Hefmagneet / Magnetic Lifter

## Eigenschappen

» Geschikt voor het hijsen en hanteren van staalplaten, -blokken of -buizen.
» Magnetisch veld wordt geproduceerd door het draaien van de hendel.
» Voldoet aan de Machinerichtlijn 2006/42/EG. Geleverd met testcertificaat, CE-conformiteitsverklaring en gebruiksaanwijzing.

## Features

» Suitable for lifting and handling steel plates, -blocks or -pipes.
» Magnetic field is produced by turning the handle.
» Complies with the Machinery Directive 2006/42/EC. Supplied with test certificate, CE declaration of conformity and operating instructions.




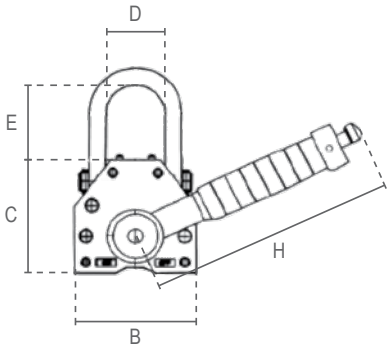


0.1 - 2 ton

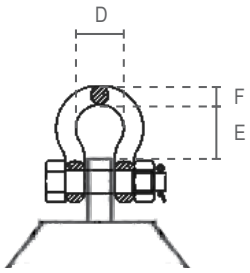


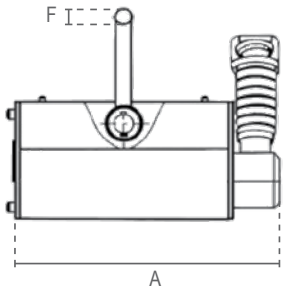


3 - 6 ton

| Specificaties / Specifications | | | | |
|---|---|---|---|---|
| Artikelnummer | Capaciteit | | Min. plaatdikte | Netto gewicht |
| Article code | Capacity | | Min. plate thickness | Net weight |
| | Vlak materiaal / Flat material | Rond materiaal / Round material (50%) | | |
| | ton | | mm | kg |
| SG.0.DML.0100 | 0.1 | 0.05 | 15 | 3 |
| SG.0.DML.0300 | 0.3 | 0.15 | 25 | 12 |
| SG.0.DML.0600 | 0.6 | 0.3 | 30 | 24 |
| SG.0.DML.1000 | 1 | 0.5 | 40 | 43 |
| SG.0.DML.2000 | 2 | 1 | 55 | 105 |
| SG.0.DML.3000 | 3 | - | 60 | 160 |
| SG.0.DML.6000 | 6 | - | 100 | 302 |

| Specificaties / Specifications | |
|---|---|
| Bedrijfstemperatuur / Operating temperature | -40°C - +80°C |
| Veiligheids factor / Safety factor | 3.5 |
| Magneet type / Magnet type | Permanente NdFeB magneet / Permanent NdFeB magnet |

| Afmetingen / Dimensions | | | | | | | |
|---|---|---|---|---|---|---|---|
| Capaciteit / Capacity ton | A | B | C | D | E | F | H |
| 0.1 | 127 | 64 | 72 | 31 | 49 | 8 | 148 |
| 0.3 | 204 | 99 | 108 | 52 | 53 | 12 | 223 |
| 0.6 | 270 | 118 | 123 | 78 | 69 | 16 | 257 |
| 1 | 314 | 150 | 158 | 77 | 75 | 20 | 303 |
| 2 | 449 | 196 | 204 | 96 | 87 | 25 | 470 |
| 3 | 495 | 234 | 232 | 57 | 65 | 22 | 576 |
| 6 | 691 | 294 | 289 | 66 | 75 | 25 | 728 |

# PML vs BML

## Premium

Meer stabiliteit door vast ophangoog. / More stability due to fixed suspension eye.




DC.0.QML

Stalen blok beschermt de hendel tegen schokken. / Steel block protects the lever from shocks.

Beweegbaar ophangoog. / Movable suspension eye.




DC.0.DML

Hendel onbeschermd. / Lever unprotected.



Ontgrendeling aan de behuizing, terugslag hendel beter controleerbaar. /Safe handling due to unlocking at the housing.



Ontgrendeling aan de hendel. / Unlocking at the lever.

| Specificaties / Specifications | | | | |
|---|---|---|---|---|
| | DC.0.QML | SG.0.DML | DC.0.QML | SG.0.DML |
| | Capaciteit rond materiaal / Capacity round material | | Min. plaatdikte / Min. plate thickness | |
| | kg | | mm | |
| 100 kg | 50 | 50 | 15 | 15 |
| 300 kg | 150 | 150 | 20 | 25 |
| 600 kg | 300 | 300 | 30 | 30 |
| 1 ton | 500 | 500 | 40 | 40 |
| 2 ton | 1000 | 1000 | 60 | 55 |




www.DECORLUX.be
HIJSTECHNIEK
TECHNIQUE LEVAGE
HEBETECHNIK
LIFTING TECHNICS

# Hef- en Hijsmiddelen
# Hoisting Equipment

| Technische wijzigingen voorbehouden | Sous réserve de modifications techniques | Subject to technical modifications | Technische Änderungen vorbehalten |



Dommekracht
Steel Rack Jack
## Type Delta SRJ



Hydraulische Machineheffer
Hydraulic Toe Jack
## Type Delta HTJ



Hydraulische Vijzel
Hydraulic Bottle Jack
## Type Delta HBJ



Klapblok
Snatch Block
## Type Delta HBJ



Klapblok met Harpsluiting
Snatch Block with Shackle
## Type Delta SBS



Driepoot
Tripod
## Type Delta TRP



Pompwagen
Pallet Truck
## Type Delta PT25PU



Kraanweegschaal
Crane scale
## Type Delta CRNS

# Type Delta RSJ

## Dommekracht / Steel Rack Jack

## Eigenschappen

- Kan in elke positie gebruikt worden.
- Van hoogwaardig gesmeed staal.
- Dragende delen zijn extra gehard.
- Beschikbaar met veiligheidshendel of ratelhendel met dubbele pallen.
- Eenvoudig te transporteren door handgrepen en intrekbare hendel.
- Capaciteit voet is 70%.
- Voldoet aan de Machinerichtlijn 2006/42/EG. Geleverd met testcertificaat, CE-conformiteitsverklaring en gebruiksaanwijzing.

## Features

- Can be used in any direction.
- Made of high tensile forged steel.
- Supporting parts are extra hardened.
- Available with safety lever or ratchet lever with double pawls.
- High transportability due to handles and foldable lever.
- Capacity on the toe is 70%.
- Complies with the Machinery Directive 2006/42/EC. Supplied with test certificate, CE declaration of conformity and operating instructions.

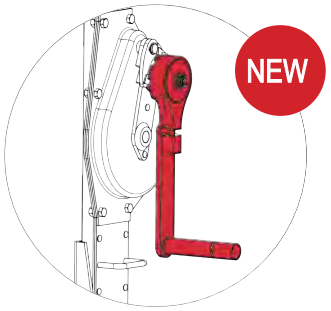





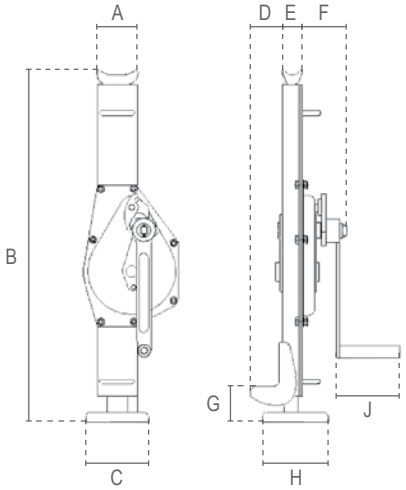


| Specificaties / Specifications | | | | | | |
|---|---|---|---|---|---|---|
| Artikelnummer | Hendeltype | Capaciteit | Test load | Hijshoogte | Inspanning voor max lading | Netto gewicht |
| Article code | Lever type | Capacity | Test load | Hoisting height | Effort for max load | Net weight |
| | | ton | kN | mm | N | kg |
| DC.0.DK.015 | Veiligheidshendel / Safety lever | 1.5 | 16.5 | 300 | 190 | 10.7 |
| DC.0.DK.03 | | 3 | 33 | 355 | 196 | 21.3 |
| DC.0.DK.05 | | 5 | 55 | 330 | 235 | 28.9 |
| DC.0.DK.10 | | 10 | 110 | 360 | 431 | 47 |
| DC.0.DK.20 | | 20 | 220 | 315 | 650 | 72 |
| DC.0.DK.015.RL | Ratelhendel / Ratchet lever | NEW 1.5 | 16.5 | 300 | 190 | 11 |
| DC.0.DK.03.RL | | 3 | 33 | 355 | 196 | 22 |
| DC.0.DK.05.RL | | 5 | 55 | 330 | 235 | 29 |
| DC.0.DK.10.RL | | 10 | 110 | 360 | 431 | 47 |

| Specificaties / Specifications | |
|---|---|
| Bedrijfstemperatuur / Operating temperature | -20°C - +80°C |

| Afmetingen / Dimensions | | | | | | | | | |
|---|---|---|---|---|---|---|---|---|---|
| Capaciteit / Capacity ton | A | B | C | D | E | F | G | H | J |
| 1.5 | 77 | 605 | 100 | 55 | 40 | 74 | 55 | 110 | 126 |
| 3 | 84 | 720 | 130 | 65 | 48 | 89 | 55 | 140 | 126 |
| 5 | 106 | 735 | 140 | 70 | 65 | 97 | 60 | 175 | 126 |
| 10 | 122 | 795 | 140 | 90 | 74 | 115 | 70 | 175 | 250 |
| 20 | 153 | 840 | 150 | 90 | 90 | 132 | 90 | 185 | 250 |

# Type Delta HTJ

## Hydraulische Machineheffer / Hydraulic Toe Jack




## Eigenschappen

- Kan in elke positie gebruikt worden.
- Huis 360° draaibaar.
- Het zakken kan nauwkeurig worden aangepast.
- Afneembare hendel.
- Met overlastbeveiliging.
- Capaciteit voet is 100%.
- Voldoet aan de Machinerichtlijn 2006/42/EG. Geleverd met testcertificaat, CE-conformiteitsverklaring en gebruiksaanwijzing.

## Features

- Can be used in any direction.
- Housing revolves 360°.
- Lowering speed can be adjusted precisely.
- Removable lever.
- With overload protection.
- Capacity on the toe is 100%.
- Complies with the Machinery Directive 2006/42/EC. Supplied with test certificate, CE declaration of conformity and operating instructions.

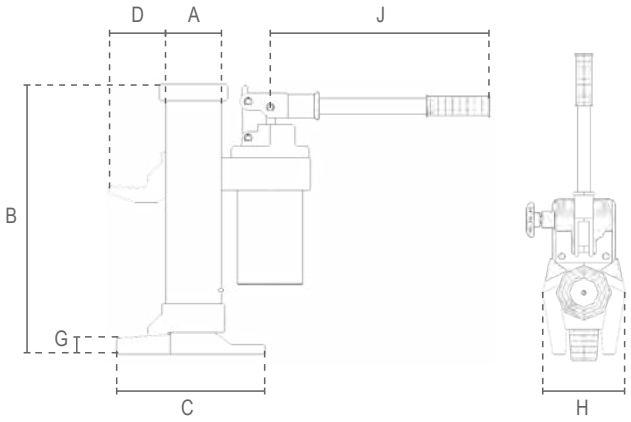


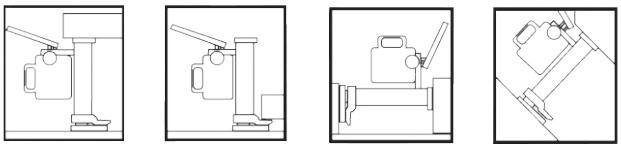

| Specificaties / Specifications | | | | | |
|---|---|---|---|---|---|
| Artikelnummer | Capaciteit | Test load | Hijshoogte | Inspanning voor max lading | Netto gewicht |
| Article code | Capacity | Test load | Hoisting height | Effort for max load | Net weight |
| | ton | kN | mm | N | kg |
| DC.0.HTJ.05 | 5 | - | 205 | 280 | 25 |
| DC.0.HTJ.10 | 10 | - | 230 | 400 | 35 |
| DC.0.HTJ.25 | 25 | - | 215 | 400 | 109 |

| Specificaties / Specifications | |
|---|---|
| Bedrijfstemperatuur / Operating temperature | -20°C - +50°C |

| Afmetingen / Dimensions | | | | | | | |
|---|---|---|---|---|---|---|---|
| Capaciteit / Capacity ton | A | B | C | D | G | H | J |
| 5 | 76 | 368 | 213 | 77 | 25 | 140 | 520 |
| 10 | 91 | 420 | 205 | 75 | 30 | 170 | 520 |
| 25 | 155 | 505 | 420 | 143 | 58 | 210 | 920 |

# Type Delta HBJ

## Hydraulische Vijzel / Hydraulic Bottle Jack




## Eigenschappen

» Met veiligheidsventiel.
» Lichte, maar robuuste constructie.
» Voldoet aan de Machinerichtlijn 2006/42/EG. Geleverd met testcertificaat, CE-conformiteitsverklaring en gebruiksaanwijzing.

## Features

» With safety valve.
» Light, yet robust housing.
» Complies with the Machinery Directive 2006/42/EC. Supplied with test certificate, CE declaration of conformity and operating instructions.

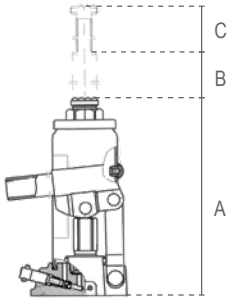


| Specificaties / Specifications | | | Afmetingen / Dimensions | | |
|---|---|---|---|---|---|
| Artikelnummer | Capaciteit | Netto gewicht | | | |
| Article code | Capacity | Net weight | A | B | C |
| | ton | kg | | | |
| SG.GR.02000 | 2 | 2.3 | 158 | 90 | 50 |
| SG.GR.03000 | 3 | 3.2 | 180 | 110 | 50 |
| SG.GR.05000 | 5 | 4.2 | 200 | 125 | 60 |
| SG.GR.08000 | 8 | 5.3 | 200 | 125 | 60 |
| SG.GR.10000 | 10 | 5.6 | 200 | 125 | 60 |
| SG.GR.12000 | 12 | 6.2 | 210 | 125 | 60 |
| SG.GR.15000 | 15 | 7.8 | 220 | 135 | 60 |
| SG.GR.20000 | 20 | 10 | 235 | 145 | 60 |
| SG.GR.30000 | 30 | 14 | 255 | 150 | - |
| SG.GR.50000 | 50 | 28 | 260 | 180 | - |

| Specificaties / Specifications | |
|---|---|
| Bedrijfstemperatuur / Operating temperature | -35°C - +50°C |

# Type Delta SBH

Klapblok met Haak / Snatch Block with Hook

## Eigenschappen

- Stalen behuizing.
- Snelle kabelinstallatie door scharnierende constructie.
- Met draaibare lasthaak.
- Permanent gesmeerde bout lager.
- Veiligheidsontwerp: Zijplaat kan niet onder belasting worden geopend.
- Voldoet aan de Machinerichtlijn 2006/42/EG. Geleverd met testcertificaat, CE-conformiteitsverklaring en gebruiksaanwijzing.

## Features

- Steel body.
- Quick rope installation due to hinged design.
- With swivel load hook.
- Permanently lubricated pin bearing.
- Safety design: Side plate cannot be opened under load.
- Complies with the Machinery Directive 2006/42/EC. Supplied with test certificate, CE declaration of conformity and operating instructions.

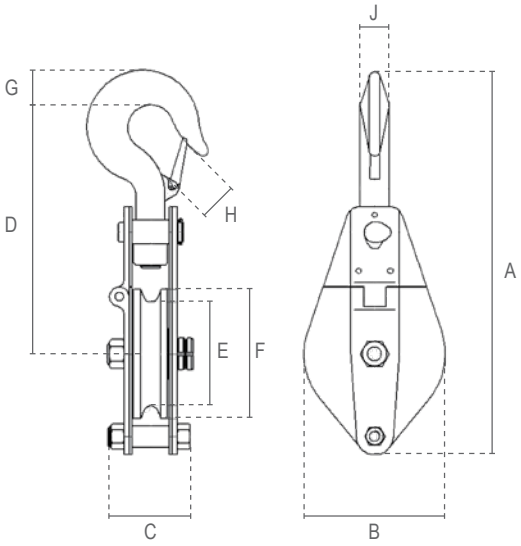




| Specificaties / Specifications | | | |
|---|---|---|---|
| Artikelnummer | Capaciteit | Kabeldiameter | Netto gewicht |
| Article code | Capacity | Cable diameter | Net weight |
| | ton | mm | kg |
| SG.0.KB.0500 | 0.5 | 5 | 2.3 |
| SG.0.KB.1000 | 1 | 7 | 3.8 |
| SG.0.KB.2000 | 2 | 13 | 7.3 |
| SG.0.KB.3200 | 3.2 | 15 | 13.5 |
| SG.0.KB.6400 | 6.4 | 18 | 22 |

| Specificaties / Specifications | |
|---|---|
| Bedrijfstemperatuur / Operating temperature | -20°C - +40°C |

| Afmetingen / Dimensions | | | | | | | | | |
|---|---|---|---|---|---|---|---|---|---|
| Capaciteit / Capacity ton | A | B | C | D | E | F | G | H | J |
| 0.5 | 261 | 99 | 75 | 173 | 75 | 88 | 21 | 19 | 19 |
| 1 | 310 | 117 | 84 | 205 | 85 | 105 | 23 | 26 | 20 |
| 2 | 425 | 200 | 92 | 263 | 150 | 190 | 30 | 27 | 24 |
| 3.2 | 496 | 230 | 108 | 295 | 180 | 220 | 40 | 31 | 28 |
| 6.4 | 655 | 270 | 116 | 375 | 260 | 300 | 47 | 42 | 35 |

# Type Delta SBS

## Klapblok met Harpsluiting / Snatch Block with Shackle

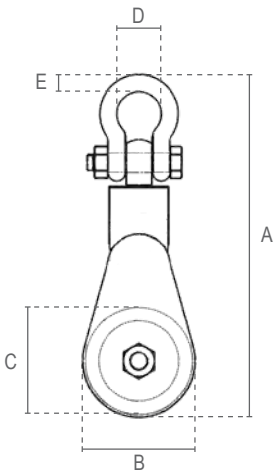





## Eigenschappen

- Stalen behuizing.
- Met draaibare harpsluiting.
- Zelfsmerende bout lager.
- Voldoet aan de Machinerichtlijn 2006/42/EG. Geleverd met testcertificaat, CE-conformiteitsverklaring en gebruiksaanwijzing.

## Features

- Steel body.
- With swivel shackle.
- Self lubricating pin bearing.
- Complies with the Machinery Directive 2006/42/EC. Supplied with test certificate, CE declaration of conformity and operating instructions.

| Specificaties / Specifications | | | |
|---|---|---|---|
| Artikelnummer | Capaciteit | Kabeldiameter | Netto gewicht |
| Article code | Capacity | Cable diameter | Net weight |
| | ton | mm | kg |
| SG.0.KBSH.002000 | 2 | 7-9 | 2.3 |
| SG.0.KBSH.004000 | 4 | 10-12 | 6.7 |
| SG.0.KBSH.008000 | 8 | 16-19 | 14 |
| SG.0.KBSH.010000 | 10 | 16-19 | 16 |
| SG.0.KBSH.012000 | 12 | 24-26 | 40 |
| SG.0.KBSH.015000 | 15 | 24-26 | 54 |
| SG.0.KBSH.020000 | 20 | 25-29 | 56 |
| SG.0.KBSH.022000 | 22 | 29-32 | 112 |
| SG.0.KBSH.030000 | 30 | 32-35 | 164 |
| SG.0.KBSH.050000 | 50 | 38-42 | 340 |
| SG.0.KBSH.085000 | 85 | 46-50 | 590 |
| SG.0.KBSH.100000 | 100 | 68-72 | 650 |
| SG.0.KBSH.120000 | 120 | 78-82 | 700 |

| Specificaties / Specifications | |
|---|---|
| Bedrijfstemperatuur / Operating temperature | -20°C - +40°C |

| Afmetingen / Dimensions | | | | | |
|---|---|---|---|---|---|
| Capaciteit / Capacity | A | B | C | D | E |
| ton | | | | | |
| 2 | 237 | 76 | 75 | 35 | 14 |
| 4 | 355 | 116 | 115 | 51 | 20 |
| 8 | 495 | 155 | 152 | 73 | 30 |
| 10 | 520 | 155 | 152 | 74 | 31 |
| 12 | 685 | 260 | 254 | 80 | 33 |
| 15 | 713 | 260 | 254 | 90 | 39 |
| 20 | 777 | 260 | 254 | 96 | 40 |
| 22 | 952 | 360 | 355 | 96 | 40 |
| 30 | 1128 | 415 | 406 | 146 | 53 |
| 50 | 1330 | 615 | 609 | 184 | 69 |
| 85 | 1910 | 765 | 762 | 200 | 76 |
| 100 | 2100 | 824 | 812 | 205 | 80 |
| 120 | 2350 | 900 | 889 | 210 | 98 |

# Type Delta TRP

Driepoot / Tripod

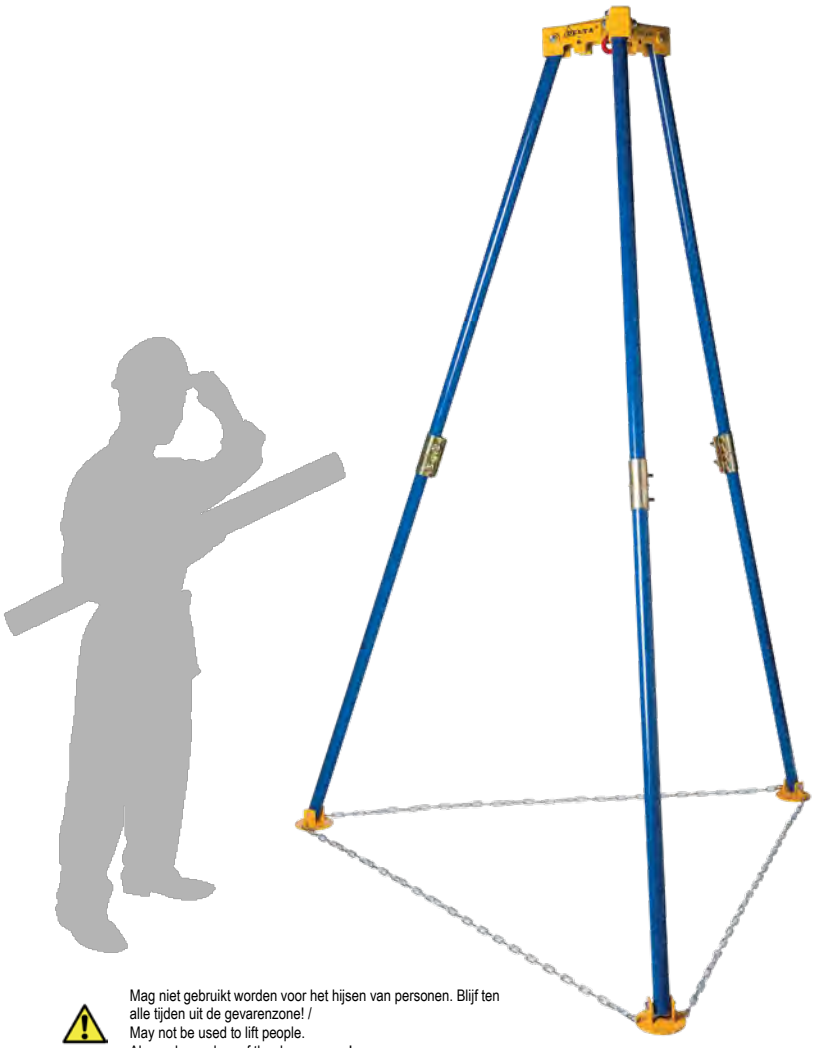

Mag niet gebruikt worden voor het hijsen van personen. Blijf ten alle tijden uit de gevarenzone! /
May not be used to lift people.
Always keep clear of the danger zone!

## Eigenschappen

- Alle drie de poten zijn deelbaar door koppelingen, voor eenvoudig transport.
- De poten zijn met kettingen met elkaar verbonden voor een variabele spreiding.
- Elke poot is voorzien van een scharnierende voet voor een stabiele positie op de grond.
- Robuust kopstuk met een wartel-oog voor het ophangen van een takel of hijsblok. Kan worden
- gemonteerd en geleverd met: Hand- of elektrische kettingtakel en hand- of elektrische lier.

## Features

- All three legs are dividable by couplers, for easy transportation.
- Feet connected by chains enable a variable spread.
- Each leg is fitted with a hinged foot for stable position on the ground.
- Robust headpiece with a rotating eye for suspending a hoist or pulley.
- Can be fitted and delivered with: Manual or electric chain hoist and manual or electric winch.

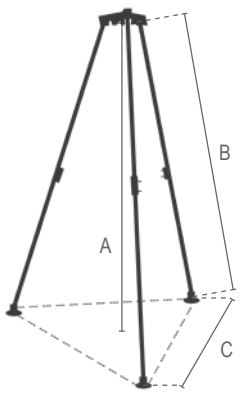


| Specificaties / Specifications | | | Afmetingen / Dimensions | | |
|---|---|---|---|---|---|
| Artikelnummer | Capaciteit | Netto gewicht | | | |
| Article code | Capacity | Net weight | A | B | C |
| | ton | kg | | | |
| ST.0.0000000001 | 0.5 | 55 | 2840 | 3000 | 1900 |

| Specificaties / Specifications | |
|---|---|
| Ladingtype / Load type | Alleen voor goederen, niet geschikt om personen te hijsen / Goods, may not be used to lift people |

# Type Delta PT25PU / PT25PUQ

Pompwagen / Pallet Truck




NEW

"Quick Lift"

50% minder pompbewegingen voor hetzelfde hefresultaat /
50% less strokes required for maximum lift



PT.0.ST.2500Q

PT.0.ST.2500

## Eigenschappen

- Speciaal ontworpen om uiteenlopende goederen te heffen en te vervoeren.
- Polyurethaan (PU) wielen.
- Ergonomische hendel met rubberen handvat.
- Voldoet aan de Machinerichtlijn 2006/42/EG. Geleverd met testcertificaat, CE-conformiteitsverklaring en gebruiksaanwijzing.

## Features

- Specially designed to lift and transport a wide variety of goods.
- Polyurethane (PU) wheels.
- Ergonomic handle with rubber grip.
- Complies with the Machinery Directive 2006/42/EC. Supplied with test certificate, CE declaration of conformity and operating instructions.

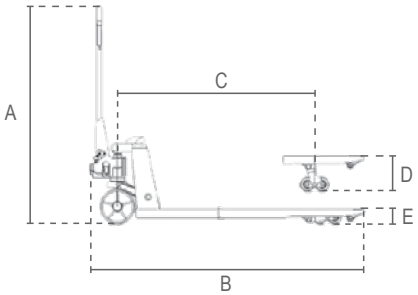


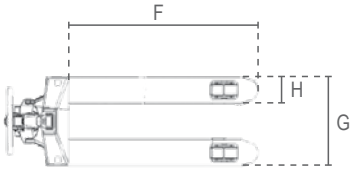


| Specificaties / Specifications | | | | Afmetingen / Dimensions | | | | | | | |
|---|---|---|---|---|---|---|---|---|---|---|---|
| Artikelnummer | Capaciteit | Netto gewicht | Pompbewegingen | | | | | | | | |
| Article code | Capacity | Net weight | Strokes | A | B | C | D | E | F | G | H |
| | ton | kg | | | | | | | | | |
| PT.0.ST.2500 | 2.5 | 70 | 14 | 1240 | 1520 | 1050 | 200 | 85 | 1150 | 540 | 160 |
| PT.0.ST.2500Q | | | 7 | | | | | | | | |

# Type Delta CRNS

Kraanweegschaal / Crane scale

## Eigenschappen

» Compacte behuizing.
» Met verlicht display.
» Versterkte laadvlak.
» Met overlast alarm.
» Stroom voorziening: 3x AA batterijen (geleverd exclusiv batterijen).
» Geleverd met kalibratierapport.
» Voldoet aan de Machinerichtlijn 2006/42/EG. Geleverd met testcertificaat, CE-conformiteitsverklaring en gebruiksaanwijzing.

## Features

» Compact housing.
» With backlit display.
» Strengthened load area.
» With overload alarm.
» Power supply: 3x AA batteries (not included).
» Supplied with calibration report.
» Complies with the Machinery Directive 2006/42/EC. Supplied with test certificate, CE declaration of conformity and operating instructions.




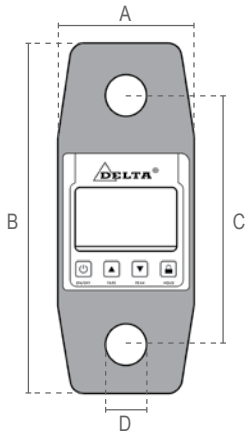




| Specificaties / Specifications | | | | | | | |
|---|---|---|---|---|---|---|---|
| Artikelnummer zonder draadloze indicator | Artikelnummer met draadloze indicator | Capaciteit | Minimale belasting | Afwijking | Netto gewicht | met koffer | Geschikte sluiting |
| Article code without wireless indicator | Article code with wireless indicator | Capacity | Minimum load | Sensitivity | Net weight | with case | Suitable shackle |
| | | ton | kg | kg | kg | kg | DELTALOCK® |
| SG.0.CS.03 | SG.0.CS.03.RC | 3 | 18 | 1 | 1.7 | 3.2 | 4.75 ton |
| SG.0.CS.05 | SG.0.CS.05.RC | 5 | 30 | 2 | 3.4 | 4.9 | 6.5 ton |
| SG.0.CS.10 | SG.0.CS.10.RC | 10 | 50 | 5 | 6.8 | 8.3 | 12 ton |

| Specificaties / Specifications | |
|---|---|
| Nauwkeurigheid / Accuracy | < ± 0.1% |
| Behuizing bescherming / Housing protection | IP 65 |
| Bedrijfstemperatuur / Operating temperature | -10°C - +40°C |

| Afmetingen / Dimensions | | | | |
|---|---|---|---|---|
| Capaciteit / Capacity ton | A | B | C | D |
| 1 | 90 | 230 | 165 | 26 |
| 2 | 90 | 230 | 165 | 26 |
| 3 | 90 | 230 | 165 | 26 |
| 5 | 90 | 230 | 165 | 32 |
| 10 | 90 | 280 | 195 | 38 |



# Hijsbanden
# Rondslingen

# Sangles de levage
# Elingues ronde

# Lifting Slings
# Round Slings

# Hebebänder
# Rundslingen

HIJSTECHNIEK
LIFTING TECHNICS
TECHINIQUE LEVAGE
HEBETECHNIK

DECORLUX









# Hijsbanden Rondslingen

# Sangles de levage Elingues ronde









# Lifting Slings Round Slings

# Hebebänder Rundslingen

| IDENTIFICATIE VAN WLL : KLEUR PER TONNENMAAT STREEPCODE / TON LABEL VOLGENS DIN 61360 | IDENTIFICATION CMU PAR : CODAGE COULEUR CODAGE DE LIGNES L'ETIQUETTE DIN61360 | polyester PES | polyamide PA6 | Polyprop. PP | WLL IDENTIFICATION WITH COLOR CODE STRIPES CODE LABEL CONFORM DIN 61360 | ID VON TRAGFÄHIGKEIT : FARBECODIERUNG TONNENSTREIFEN ETIKET NACH DIN61360 |
|---|---|---|---|---|---|---|
| Gewicht g/cm³ | Densité g/cm³ | 1.38 | 1.14 | 0.91 | Density g/ cm³ | Spec. Gewicht |
| Rek bij WLL / hijsbanden | Allongement sous CMU/sangles | 3-5% | 5-7% | 4-6% | WLL-Tensile-slings | Dehnung hebebänder |
| Rek bij WLL / rondslingen | Allongement sous CMU/elingues | 1% | 3% | 3% | WLL-Tensile-roundslings | Dehnung rundslingen |
| Vormbestendigheid | Resistance a la forme | ***** | ***** | ***** | Resistance / Form | Formbeständigkeit |
| Scheurbestendigheid | Resistance a la rupture | ***** | ***** | *** | Resistance / Ripping | Abriessfestigkeit |
| Vochtopname | Hydrophile | 1% | 9% | 0 | Assimilation of moister | Feuchtigkeitsaufname |
| Smeltpunt | Temperature de fusion | 250°C | 215°C | 160°C | Meltingpoint | Schmelzbereich |
| Bedrijfstemperatuur / DIN | Temperature | -40-100°C | -40-100°C | -40-80°C | Temperature | Temperature |
| Veiligheidsfaktor (SF) | Coefficient de sécurité (SF) | 7 | 7 | 7 | Safety Factor(SF) | Sicherheitsfaktor (SF) |
| Maatwerk | Confectioné par mesure | ▪ | ▪ | ▪ | Specials | Sonderfertigungen |
| Bestendigheid / zuren | Résistance / acides | *** | ** | ***** | Resistance / acid | Beständigkeit / Säuren |
| Bestendigheid / logen | Résistance / bases | ** | ***** | ***** | Resistance / bases | Beständigkeit / Laugen |

*WORKING LOAD LIMIT voor -hijsbanden en rondslingen*
*CHARGE MAXIMUM UTILLE pour sangles de levage et elingues rondes*
*WORKING LOAD LIMIT for PES-Liftingslings and Roundslings*
TRAGFÄHIGKEIT fur Hebebänder und rundslingen

| WLL *CMU* KG | MET 1 HIJSBAND OF RONDSLING- *AVEC 1 SANGLE OU ELINGUE RONDES WITH 1 SLING OR ROUNDSLING MIT 1 HEBEBÄND ODER RUNDSLING* | | | | | | MET 2 HIJSBANDEN OF RONDSLINGEN- *AVEC 2 SANGLES OU ELINGUES RONDES WITH 2 SLINGS OR ROUNDSLING MIT 2 HEBEBÄNDER ODER RUNDSLINGEN* | | | |
|---|---|---|---|---|---|---|---|---|---|---|
| | | | β 0°- 45° | β 45°- 60° | β 0°- 45° | β 45°- 60° | β 0°- 45° | β 45°- 60° | β 0°- 45° | β 45°- 60° |
| 1000 | 800 | 2000 | 1400 | 1000 | 700 | 500 | 1400 | 1000 | 1120 | 800 |
| 2000 | 1600 | 4000 | 2800 | 2000 | 1400 | 1000 | 2800 | 2000 | 2240 | 1600 |
| 3000 | 2400 | 6000 | 4200 | 3000 | 2100 | 1500 | 4200 | 3000 | 3360 | 2400 |
| 4000 | 3200 | 8000 | 5600 | 4000 | 2800 | 2000 | 5600 | 4000 | 4480 | 3200 |
| 5000 | 4000 | 10000 | 7000 | 5000 | 3500 | 2500 | 7000 | 5000 | 5600 | 4000 |
| 6000 | 4800 | 12000 | 8400 | 6000 | 4200 | 3000 | 8400 | 6000 | 6720 | 4800 |
| 8000 | 6400 | 16000 | 11200 | 8000 | 5600 | 4000 | 11200 | 8000 | 8960 | 6400 |
| 10000 | 8000 | 20000 | 14000 | 10000 | 7000 | 5000 | 14000 | 10000 | 11200 | 8000 |

**Type DHB**
Dubbele hijsband
met versterkte ogen.

Volgens EN 1492-1

**Type DHB**
Sangle de levage double
avec brins renforcees.

Conforme EN 1492-1

**Type DHB**
Lifting Sling double ply
with reinforced eyes.

Conform EN 1492-1

**Type DHB**
Hebebänd
mit verstärkte Schlaufen

Nach EN 1492-1

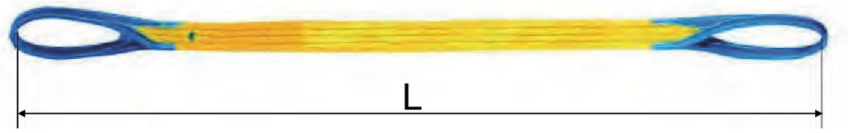


CE
Europa/EEC




| WLL<br>CMU | 1 TON | 2 TON | 3 TON | 4 TON | 5 TON | 6 TON | 8 TON | 10 TON |
|---|---|---|---|---|---|---|---|---|
| KLEURCODE<br>CODAGE COULEUR<br>COLOR CODE<br>FARBE | VIOLET<br>VIOLET<br>VIOLET<br>VIOLETT | GROEN<br>VERT<br>GREEN<br>GRÜN | GEEL<br>JAUNE<br>YELLOW<br>GELB | GRIJS<br>GRIS<br>GREY<br>GRAU | ROOD<br>ROUGE<br>RED<br>ROT | **BRUIN<br>BRUN<br>BROWN<br>BRAUN** | BLAUW<br>BLEU<br>BLUE<br>BLAU | ORANJE<br>ORANGE<br>ORANGE<br>ORANGE |
| BREEDTE – LARGEUR<br>WIDTH-BREITE | 30MM | 60MM | 90MM | 120MM | 150MM | 180MM | 240MM | 300MM |
| DIKTE –EPAISSEUR<br>THICKNESS-DICKE | 7MM | 7MM | 7MM | 7MM | 7MM | 7MM | 7MM | 10MM |
| **L / M** | | | | | | | | |
| **0,5** | 25001T0050 | | | | | | | |
| **1** | 25001T0100 | 25002T0100 | 25003T0100 | 25004T0100 | 25005T0100 | | | |
| **1,5** | 25001T0150 | 25002T0150 | 25003T0150 | 25004T0150 | 25005T0150 | | | |
| **2** | 25001T0200 | 25002T0200 | 25003T0200 | 25004T0200 | 25005T0200 | 25006T0200 | 25008T0200 | 25010T0200 |
| **2,5** | 25001T0250 | 25002T0250 | 25003T0250 | 25004T0250 | 25005T0250 | | | |
| **3** | 25001T0300 | 25002T0300 | 25003T0300 | 25004T0300 | 25005T0300 | 25006T0300 | 25008T0300 | 25010T0300 |
| **3,5** | | 25002T0350 | | | | | | |
| **4** | 25001T0400 | 25002T0400 | 25003T0400 | 25004T0400 | 25005T0400 | 25006T0400 | 25008T0400 | 25010T0400 |
| **5** | 25001T0500 | 25002T0500 | 25003T0500 | 25004T0500 | 25005T0500 | 25006T0500 | 25008T0500 | 25010T0500 |
| **6** | 25001T0600 | 25002T0600 | 25003T0600 | 25004T0600 | 25005T0600 | 25006T0600 | 25008T0600 | 25010T0600 |
| **7** | | | | | | | 25008T0700 | |
| **8** | 25001T0800 | 25002T0800 | 25003T0800 | 25004T0800 | 25005T0800 | 25006T0800 | 25008T0800 | |
| **10** | 25001T1000 | 25002T1000 | 25003T1000 | 25004T1000 | 25005T1000 | 25006T1000 | 25008T1000 | 25010T0800 |
| **12** | 25001T1200 | 25003T0100 | 25003T1200 | 25004T1200 | 25005T1200 | 25006T1200 | 25008T1200 | 25010T1000 |
| ***+1M*** | ☑ | ☑ | ☑ | ☑ | ☑ | ☑ | ☑ | ☑ |

(ON DEMAND.) = WLL > 10[t] - alternatieve bandbreedte / largeur alternative /.alternative width / alternativ breite




Beschermingsmantels voor hijsbanden
Houses de protection pour sangles de levage
Protection covers for lifting slings
Schutzschläuche fur Hebebänder



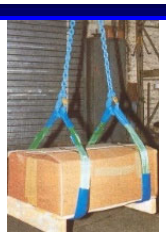

| *TYPE* | | | | | | | | | |
|---|---|---|---|---|---|---|---|---|---|
| ***PURE-PVC*** | PVC | ☑ | ☑ | ☑ | ☑ | ☑ | ☑ | ☑ | ☑ |
| ***PURE-PU*** | PU | ☑ | ☑ | ☑ | ☑ | ☑ | ☑ | ☑ | - |
| ***PURE-PES*** | PES | **BWD025B035W** | **BWD045B065W** | **BWD065B092W** | **BWD090B132W** | **BWD102B152W** | **BWD125B186W** | - | - |
| ***PROTEX-L1*** | PU | ☑ | ☑ | ☑ | ☑ | ☑ | ☑ | ☑ | ☑ |
| ***PROTEX-L2*** | PU | ☑ | ☑ | ☑ | ☑ | ☑ | ☑ | ☑ | ☑ |
| ***PROTEX-V1*** | PU | ☑ | ☑ | ☑ | ☑ | ☑ | ☑ | ☑ | ☑ |
| ***PROTEX-V2*** | PU | ☑ | ☑ | ☑ | ☑ | ☑ | ☑ | ☑ | ☑ |
| ***EP-L-50cm*** | **Dyneema®** | ☑ | ☑ | ☑ | ☑ | ☑ | ☑ | ☑ | ☑ |
| ***EP-L-100cm*** | **Dyneema®** | ☑ | ☑ | ☑ | ☑ | ☑ | ☑ | ☑ | ☑ |

**Type DRB**
Hijsband met versterkte ogen
+ dubbelzijdige PU-COATING

Volgens EN 1492-1

**Type DRB**
Sangle de levage avec brins renforcees
+ REVÊTEMENT PU–double face

Conforme EN 1492-1

**Type DRB**
Lifting Sling with reinforced eyes
+ PU-COATING

Conform EN 1492-1

**Type DRB**
Hebebänd mit Schlaufen
+ PU-beschichtung

Volgens EN 1492-1




Europa/EEC

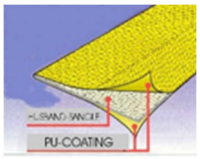


| WLL CMU | | 1 TON | | 2 TON | | 3 TON | | 4 TON | 5 TON | 6 TON | 8 TON | 10 TON |
|---|---|---|---|---|---|---|---|---|---|---|---|---|
| KLEURCODE CODAGE COULEUR COLOR CODE FARBE | | VIOLET VIOLET VIOLET VIOLETT | | GROEN VERT GREEN GRÜN | | GEEL JAUNE YELLOW GELB | | GRIJS GRIS GREY GRAU | ROOD ROUGE RED ROT | BRUIN BRUN BROWN BRAUN | BLAUW BLEU BLUE BLAU | ORANJE ORANGE ORANGE ORANGE |
| BREEDTE – LARGEUR WIDTH-BREITE MM | | 30 | (50) | 60 | (75) | 90 | (140) | 120 | 150 | 180 | 240 | 300 |
| DIKTE –EPAISSEUR THICKNESS-DICKE MM | | 7 | 6 | 7 | 6 | 7 | 6 | 7 | 7 | 7 | 7 | 10 |
| LENGTE - LONGEUR LENGTH – LÄNGE MM | | | | | | | | | | | | |
| STAND. LAAGDIKTE | 1M | ☑ | | ☑ | | ☑ | ☑ | ☑ | ☑ | ☑ | ☑ | ☑ |
| | +1M | ☑ | | ☑ | | ☑ | ☑ | ☑ | ☑ | ☑ | ☑ | ☑ |
| EXTRA LAAGDIKTE | 1M | ☑ | | ☑ | | ☑ | ☑ | ☑ | ☑ | ☑ | ☑ | ☑ |
| | +1M | ☑ | | ☑ | | ☑ | ☑ | ☑ | ☑ | ☑ | ☑ | ☑ |

(.) = alternatieve bandbreedte / largeur alternative /.alternative width / alternativ breite

**Type DAC**
Hijsband met versterkte ogen
+ ANTICUT

Volgens EN 1492-1

**Type DAC**
Sangle de levage avec brins renforcees
+ ANTICUT

Conforme EN 1492-1

**Type DAC**
Lifting Sling with reinforced eyes
+ ANTICUT

Conform EN 1492-1

**Type DAC**
Hebebänd mit Schlaufen
+ ANTICUT

Volgens EN 1492-1




Europa/EEC

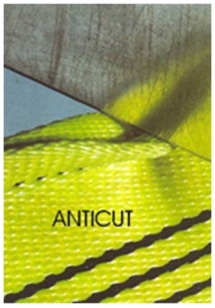


| WLL CMU | 1 TON | 2 TON | 3 TON | 4 TON | 5 TON |
|---|---|---|---|---|---|
| KLEURCODE CODAGE COULEUR COLOR CODE FARBE | VIOLET VIOLET VIOLET VIOLETT | GROEN VERT GREEN GRÜN | GEEL JAUNE YELLOW GELB | GRIJS GRIS GREY GRAU | ROOD ROUGE RED ROT |
| BREEDTE – LARGEUR WIDTH-BREITE MM | 30 | 60 | 90 | 120 | 150 |
| DIKTE –EPAISSEUR THICKNESS-DICKE MM | 7 | 7 | 7 | 7 | 6 |
| LENGTE - LONGEUR LENGTH – LÄNGE MM | | | | | |
| 1M | ☑ | ☑ | ☑ | ☑ | ☑ |
| +1M | ☑ | ☑ | ☑ | ☑ | ☑ |

- Speciale V-vorm beschermd de hijsband tegen zijdelings insnijden
- La forme-V spéciale donne une protection contre une coupure latérale.
- Special V-form protects the sling against lateral cutting.
- Die V-Form der Webkante absorbiert seitliche bBeanspruchungen.

**Type DHB4**
4x Dubbele Hijsband met versterkte ogen

Volgens EN 1492-1

**Type DHB4**
4x Double Sangle de levage avec brins renforcees

Conforme EN 1492-1

**Type DHB4**
4 ply-Lifting Sling with reinforced eyes

Conform EN 1492-1

**Type DHB4**
4 Lagige Hebebänd mit Schlaufen

Volgens EN 1492-1

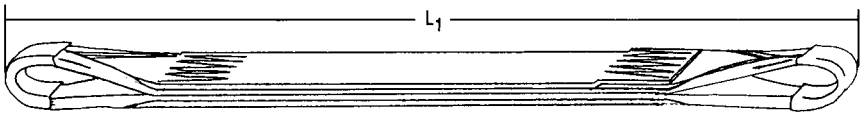


Europa/EEC

Hogere WLL voor een gelijke bandbreedte - Une CMU plus haut pour la même largeurs des sangles
Higher WLL for the same width – Höhere WLL fur gleichen bandbreite.

| WWL / CMU | 2 TON | 3 TON | 4 TON | 5 TON | 6 TON | 8 TON | 10 TON | 12 TON | 16 TON | 20 TON |
|---|---|---|---|---|---|---|---|---|---|---|
| BREEDTE– LARGEUR WIDTH-BREITE MM | GROEN VERT GREEN GRÜN | GEEL JAUNE YELLOW GELB | GRIJS GRIS GREY GRAU | ROOD ROUGE RED ROT | BRUIN BRUN BROWN BRAUN | BLAUW BLEU BLUE BLAU | ORANJE ORANGE ORANGE ORANGE | | | |
| DIKTE –EPAISSEUR THICKNESS-DICKE MM | 30mm | 65mm | 60mm | 85mm | 90mm | 120mm | 150mm | 180mm | 240mm | 300mm |
| LENGTE - LONGEUR LENGTH – LÄNGE MM | 14mm | 12mm | 14mm | 12mm | 14mm | 14mm | 14mm | 14mm | 14mm | 20mm |

**Type DHBT**
Hijsband met triangels

Volgens EN 1492-1

**Type DHBT**
Sangle de levage avec anneaux arcier

Conforme EN 1492-1

**Type DHBT**
Lifting Sling with triangle

Conform EN 1492-1

**Type DHBT**
Hebebänd mit Bügel

Volgens EN 1492-1

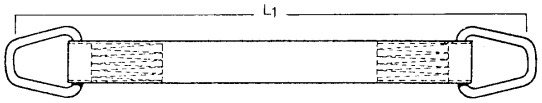


E/E

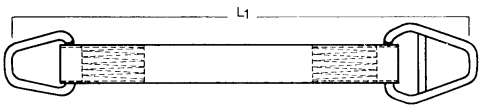


E/ED

Europa/EEC

| WLL / CMU | 1 TON | | 2 TON | | 3 TON | | 4 TON | 5 TON | 6 TON | 8 TON | 10 TON |
|---|---|---|---|---|---|---|---|---|---|---|---|
| KLEURCODE CODAGE COULEUR COLOR CODE FARBE | VIOLET VIOLET VIOLET VIOLETT | | GROEN VERT GREEN GRÜN | | GEEL JAUNE YELLOW GELB | | GRIJS GRIS GREY GRAU | ROOD ROUGE RED ROT | BRUIN BRUN BROWN BRAUN | BLAUW BLEU BLUE BLAU | ORANJE ORANGE ORANGE ORANGE |
| BREEDTE– LARGEUR WIDTH-BREITE MM | (50) | 30 | (75) | 60 | (140) | 90 | 120 | 150 | 180 | 240 | 300 |
| DIKTE –EPAISSEUR THICKNESS-DICKE MM | 6 | 7 | 6 | 7 | 6 | 7 | 7 | 7 | 7 | 7 | 10 |

(.) = alternatieve bandbreedte / largeur alternative /.alternative width / alternativ breite

**Type DHB-EM**
Hijsband eindloos

Volgens EN 1492-1

**Type DHB-EM**
Sangle de levage sans fin

Conforme EN 1492-1

**Type DHB-EM**
Lifting Sling endless

Conform EN 1492-1

**Type DHB-EM**
Hebebänd endlös

Volgens EN 1492-1

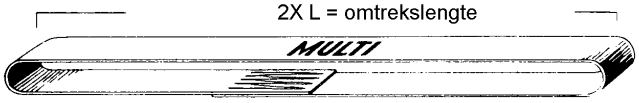


Europa/EEC

| WLL / CMU | 1 TON | 2 TON | 3 TON | 4 TON | 4 TON | 5 TON | 6 TON | 6 TON |
|---|---|---|---|---|---|---|---|---|
| KLEURCODE CODAGE COULEUR COLOR CODE FARBE | VIOLET VIOLET VIOLET VIOLETT | GROEN VERT GREEN GRÜN | GEEL JAUNE YELLOW GELB | GRIJS GRIS GREY GRAU | ROOD ROUGE RED ROT | BRUIN BRUN BROWN BRAUN | BLAUW BLEU BLUE BLAU | ORANJE ORANGE ORANGE ORANGE |
| BREEDTE– LARGEUR WIDTH-BREITE MM | 25 | 30 | 65 | 60 | 75 | 100 | 90 | 140 |
| DIKTE –EPAISSEUR THICKNESS-DICKE MM | 8 | 7 | 6 | 7 | 7 | 6 | 7 | 6 |

**Type DRSL**
Rondsling in PES
extra dikke beschermingshoes
Volgens EN 1492-2

**Type DRSL**
Elingues rondes
avec gaine renforcee
Conforme EN 1492-2

**Type DRSL**
Roundsling
with extra strong cover
Conform EN 1492-2

**Type DRSL**
Rundsling
mit verstärkte schlauch.
Volgens EN 1492-2



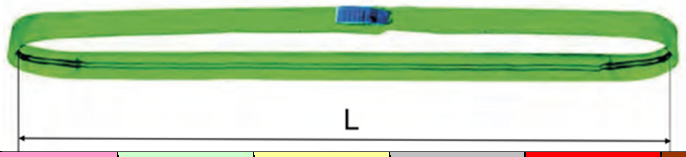


Europa/EEC



| WLL - CMU | 1 TON | 2 TON | 3 TON | 4 TON | 5 TON | 6 TON | 8 TON | 10 TON |
|---|---|---|---|---|---|---|---|---|
| KLEURCODE<br>CODAGE COULEUR<br>COLOR CODE<br>FARBE | VIOLET<br>VIOLET<br>VIOLET<br>VIOLETT | GROEN<br>VERT<br>GREEN<br>GRÜN | GEEL<br>JAUNE<br>YELLOW<br>GELB | GRIJS<br>GRIS<br>GREY<br>GRAU | ROOD<br>ROUGE<br>RED<br>ROT | BRUIN<br>BRUN<br>BROWN<br>BRAUN | BLAUW<br>BLEU<br>BLUE<br>BLAU | ORANJE<br>ORANGE<br>ORANGE<br>ORANGE |
| L / M | | | | | | | | |
| **0,5** | 30001T0100 | 30002T0100 | | | | | | |
| **1,0** | 30001T0200 | 30002T0200 | 30003T0200 | 30004T0200 | 30005T0200 | 30006T0200 | 30008T0200 | 30010T0200 |
| **1,5** | 30001T0300 | 30002T0300 | 30003T0300 | 30004T0300 | 30005T0300 | 30006T0300 | 30008T0300 | 30010T0300 |
| **2,0** | 30001T0400 | 30002T0400 | 30003T0400 | 30004T0400 | 30005T0400 | 30006T0400 | 30008T0400 | 30010T0400 |
| **2,5** | 30001T0500 | 30002T0500 | 30003T0500 | 30004T0500 | 30005T0500 | 30006T0500 | 30008T0500 | 30010T0500 |
| **3,0** | 30001T0600 | 30002T0600 | 30003T0600 | 30004T0600 | 30005T0600 | 30006T0600 | 30008T0600 | 30010T0600 |
| **4,0** | 30001T0800 | 30002T0800 | 30003T0800 | 30004T0800 | 30005T0800 | 30006T0800 | 30008T0800 | 30010T0800 |
| **5,0** | 30001T1000 | 30002T1000 | 30003T1000 | 30004T1000 | 30005T1000 | 30006T1000 | 30008T1000 | 30010T1000 |
| **6,0** | 30001T1200 | 30002T1200 | 30003T1200 | 30004T1200 | 30005T1200 | 30006T1200 | 30008T1200 | 30010T1200 |
| **8,0** | 30001T1600 | 30002T1600 | 30003T1600 | 30004T1600 | 30005T1600 | 30006T1600 | 30008T1600 | 30010T1600 |
| *+1M* | ☑ | ☑ | ☑ | ☑ | ☑ | ☑ | ☑ | ☑ |

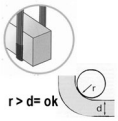


Beschermingsmantels voor hijsbanden
Houses de protection pour sangles de levage
Protection covers for lifting slings
Schutzschläuche fur Hebebänder



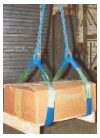

| *TYPE* | | | | | | | | | |
|---|---|---|---|---|---|---|---|---|---|
| ***PURE-PVC*** | PVC | ☑ | ☑ | ☑ | ☑ | ☑ | ☑ | ☑ | ☑ |
| ***PURE-PU*** | PU | ☑ | ☑ | ☑ | ☑ | ☑ | ☑ | ☑ | - |
| ***PURE-PES*** | PES | **BWD038B052W** | **BWD052B072W** | **BWD065B092W** | **BWD075B112W** | **BWD075B112W** | **BWD102B152W** | **BWD102B152W** | ***BWD125B186W*** |
| ***PROTEX-L1*** | PU | ☑ | ☑ | ☑ | ☑ | ☑ | ☑ | ☑ | ☑ |
| ***PROTEX-L2*** | PU | ☑ | ☑ | ☑ | ☑ | ☑ | ☑ | ☑ | ☑ |
| ***EP-L-50cm*** | **Dyneema®** | ☑ | ☑ | ☑ | ☑ | ☑ | ☑ | ☑ | ☑ |
| ***EP-L-100cm*** | **Dyneema®** | ☑ | ☑ | ☑ | ☑ | ☑ | ☑ | ☑ | ☑ |

**Type DRSL Mega**
PES-Rondsling in PES
extra dikke beschermingshoes
Volgens EN 1492-2

**Type DRSL Mega**
PES-Elingues rondes
avec gaine renforcee
Conforme EN 1492-2

**Type DRSL Mega**
PES-Roundsling
with extra strong cover
Conform EN 1492-2

**Type DRSL Mega**
PES-Rundsling
mit verstärkte schlauch.
Volgens EN 1492-2






Europa/EEC

| WLL | 12[t] | 15[t] | 20[t] | 25[t] | 30[t] | 40[t] | 50[t] | 60[t] | 80[t] | 100[t] | 150[t] |
|---|---|---|---|---|---|---|---|---|---|---|---|

**PURE**
Beschermingsmantels
in PU / PVC / PES
Volgens EN 1492-1

**PURE**
House de protection
PU / PVC / PES
Conforme EN 1492-1

**PURE**
Protection covers
in PU / PVC / PES
Conform EN 1492-1

**PURE**
Schutz-schläuche
in PU / PVC / PES
Volgens EN 1492-1

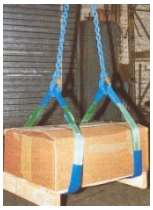

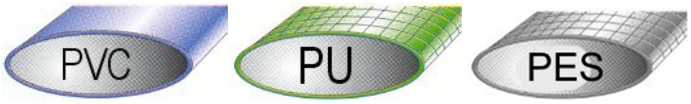


| | |
|---|---|
| Beschermingsmantels voor hijsbanden<br>Houses de protection pour sangles de levage<br>Protection covers for lifting slings<br>Schutzschläuche fur Hebebänder |  |
| Beschermingsmantels voor rondslingen<br>Houses de protection pour elingues rondes<br>Protection covers for roundslings<br>Schutzschläuche fur Rundslingen | 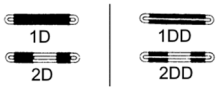 |

**PROTEX**
Beschermingsmantels
Volgens EN 1492-1

**PROTEX**
Gaine de protection
Conforme EN 1492-1

**PROTEX**
Protection covers
Conform EN 1492-1

**PROTEX**
Verschleiss schutz
Volgens EN 1492-1

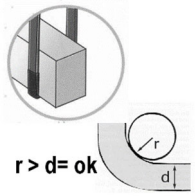


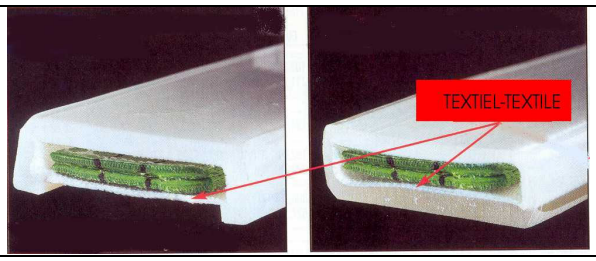


| PROTEX-L1 | PROTEX-L2 | PROTEX-V1 | PROTEX-V2 |
|---|---|---|---|
| 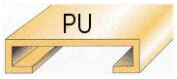 | 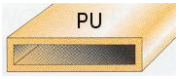 | 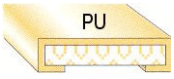 | 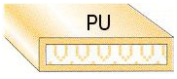 |

| | |
|---|---|
| **L =Los / coulissante / free / frei**<br>**V = Vast /*fixe / fix / fest** | **1 = enkelzijdig / 1 face / 1 side / einseitig**<br>**2 = dubbelzijdig / 2 faces / 2 sides / zweiseitig** |

- **Protex kan aangebracht worden tussen de hijsogen ofwel op bepaalde secties**
- **Protex peut s'appliquer entre des brins renforcées ou sur des parties de la sangle.**
- **Protex application is possible between the reinforced eyes or in sections.**
- **Protex durchgehend oder in sektionen.**

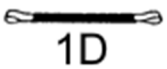







| **Hoekbeschermer-PU**<br>Kleurgecodeerd ,<br>Extreem slijt- en snijbestendig<br>**Type PU-KSE**<br>**Type PU-KSE-MAG** | **Protection de coin-PU**<br>Code couleur ,<br>Ultra robuste à l'abrasion & aux coupures<br>**PU-KSE**<br>**PU-KSE-MAG** | | **Corner-protection-PU**<br>Color-coded ,<br>Ultra abrasion & cut resistant<br>**PU-KSE**<br>**PU-KSE-MAG**) | | **Kantenschoner-PU**<br>Farbcodiert,<br>Äußerst abrieb- und schnittfest<br>**PU-KSE**<br>**PU-KSE-MAG** | |
|---|---|---|---|---|---|---|
| Bandbreedte<br>largeur de bande<br>bandwidth<br>Gurtbandbreite & | ***60mm*** | ***90mm*** | ***120mm*** | ***150mm*** | ***180mm*** | ***300mm*** |
| Breedte hoekbescherming<br>Largeur / protection - l'angle<br>Width corner protection<br>Breite kantenschoner | ***100mm*** | ***135mm*** | ***160mm*** | ***185*** | ***225*** | ***330*** |
| 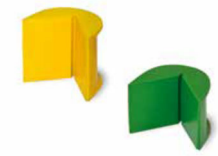 | **PU-KSE-065** | **PU-KSE-100** | **PU-KSE-125** | **PU-KSE-150** | **PU-KSE-200** | **PU-KSE-300** |
| Art. Nr. | N39160023 | N39160024 | N39160025 | N39160026 | N39160027 | N39160028 |
|  | ***PU-KSE-065-MAG*** | ***PU-KSE-100-MAG*** | ***PU-KSE-120-MAG*** | ***PU-KSE-150-MAG*** | ***PU-KSE-200-MAG*** | ***PU-KSE-300-MAG*** |
| | ***+ 2 Magnets*** | ***+ 4 Magnets*** | ***+ 4 Magnets*** | ***+ 4 Magnets*** | ***+ 6 Magnets*** | ***+ 8 Magnets*** |
| Art. Nr. | N39160025 | N39160025 | N39160025 | N39160025 | N39160025 | N39160025 |

| **Hoekbeschermer**<br>Optioneel met magneet<br>**Type KWE**<br>**Type KWE+M** | **Protection de coin**<br>Optioneel met magneet<br>**Type KWE**<br>**Type KWE+M** | **Corner-protection**<br>Optioneel met magneet<br>**Type KWE**<br>**Type KWE+M** | **Kantenschoner**<br>Optioneel met magneet<br>**Type KWE**<br>**Type KWE+M** |
|---|---|---|---|



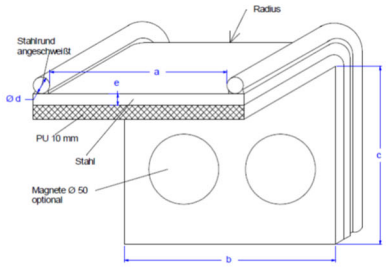


| ***Type*** | ***WLL*** | ***a*** | ***c*** | ***d*** | ***e*** | ***Magnet (Optional) KWE+M*** | ***Kg*** | ***Kg + magnet*** |
|---|---|---|---|---|---|---|---|---|
| *KWE30* | *1 ton* | *35* | *100* | *10* | *6* | *2* | *0.80* | *0.90* |
| *KWE60* | *2 ton* | *65* | *100* | *10* | *6* | *2* | *1.60* | *1.70* |
| *KWE90* | *3 ton* | *95* | *100* | *12* | *6* | *2* | *2.40* | *2.50* |
| *KWE120* | *4 ton* | *130* | *100* | *12* | *8* | *4* | *3.20* | *3.40* |
| *KWE150* | *5 ton* | *170* | *100* | *12* | *8* | *4* | *4.00* | *4.20* |
| *KWE180* | *6 ton* | *190* | *100* | *12* | *8* | *4* | *4.80* | *5.00* |
| *KWE240* | *8 ton* | *250* | *100* | *12* | *8* | *6* | *6.40* | *6.70* |
| *KWE300* | *10 ton* | *310* | *100* | *12* | *8* | *8* | *8.00* | *8.40* |
| *KWE600* | | *620* | *100* | *12* | *8* | *16* | *16.00* | *16.80* |



## Hoekbeschermer PU-KSW | Protection de coin PU-KSW | Corner-protection PU-KSW | Kantenschoner PU-KSW




| Type | ø | L | DRSL |
|---|---|---|---|
| PU-KWS 30 | 30 | *80 mm* | *2T - 2t - 3t* |
| PU-KSW 50 | 50 | *125 mm* | *4t – 5t* |

## Beschermingsmantel Dyneema® met velcro® | Gaine de protection Dyneema® avec velcro® | Protection cover Dyneema® with velcro® | Schutz-schläuche Dyneema® mit velcro®

| *Type* | *W mm* | *L 500mm* | *L 1000mm* | *+1m* |
|---|---|---|---|---|
| *EP-L0* | *80* | ☑ | ☑ | ☑ |
| *EP-L1* | *120* | ☑ | ☑ | ☑ |
| *EP-L2* | *150* | ☑ | ☑ | ☑ |
| *EP-L3* | *180* | ☑ | ☑ | ☑ |
| *EP-L4* | *200* | ☑ | ☑ | ☑ |
| *EP-L5* | *250* | ☑ | ☑ | ☑ |
| *EP-L6* | *300* | ☑ | ☑ | ☑ |
| *EP-L7* | *350* | ☑ | ☑ | ☑ |
| *EP-L8* | *400* | ☑ | ☑ | ☑ |
| *EP-L9* | *450* | ☑ | ☑ | ☑ |
| *EP-L10* | *500* | ☑ | ☑ | ☑ |
| *EP-L11* | *550* | ☑ | ☑ | ☑ |
| *EP-L12* | *600* | ☑ | ☑ | ☑ |
| *EP-L13* | *700* | ☑ | ☑ | ☑ |
| *EP-L14* | *800* | ☑ | ☑ | ☑ |
| *EP-L15* | *900* | ☑ | ☑ | ☑ |
| *EP-L16* | *1000* | ☑ | ☑ | ☑ |

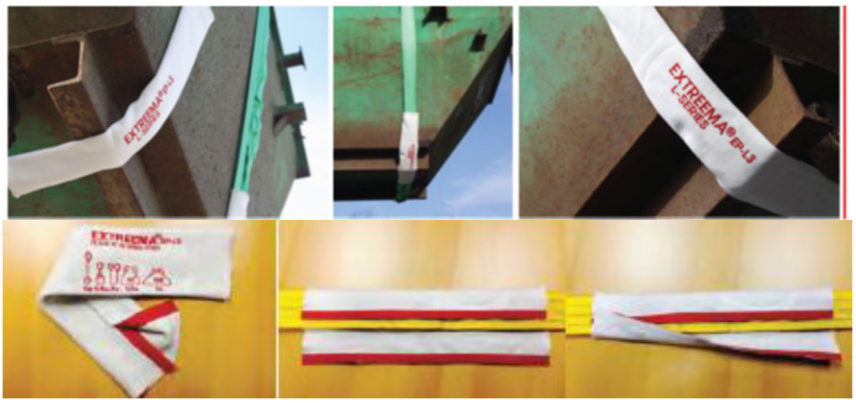


## Beschermingsmantel Dyneema® | Gaine de protection Dyneema® | Protection cover Dyneema® | Schutz-schläuche Dyneema®

### Type DYTEX Type DYTEX-HD | Type DYTEX Type DYTEX-HD | Type DYTEX Type DYTEX-HD | Type DYTEX Type DYTEX-HD

| *Type* | *W mm* | *L 1000mm* | *+1m* | *Use* |
|---|---|---|---|---|
| DYTEX 80 | *80* | ☑ | ☑ | Normal |
| DYTEX 110 | *110* | ☑ | ☑ | Normal |
| DYTEX 130 | *130* | ☑ | ☑ | Normal |
| DYTEX 160 | *160* | ☑ | ☑ | Normal |
| DYTEX 190 | *190* | ☑ | ☑ | Normal |
| DYTEX 230 | *230* | ☑ | ☑ | Normal |
| DYTEX 260 | *260* | ☑ | ☑ | Normal |
| DYTEX 290 | *290* | ☑ | ☑ | Normal |
| DYTEX-HD 85 | *85* | ☑ | ☑ | Heavy Duty |
| DYTEX-HD 115 | *115* | ☑ | ☑ | Heavy Duty |
| DYTEX-HD 135 | *135* | ☑ | ☑ | Heavy Duty |
| DYTEX-HD 160 | *160* | ☑ | ☑ | Heavy Duty |
| DYTEX-HD 190 | *190* | ☑ | ☑ | Heavy Duty |
| DYTEX-HD 230 | *230* | ☑ | ☑ | Heavy Duty |
| DYTEX-HD 260 | *260* | ☑ | ☑ | Heavy Duty |
| DYTEX-HD 290 | *290* | ☑ | ☑ | Heavy Duty |

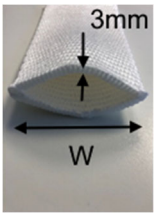


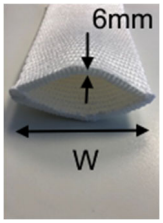

**GRS :** Volgens EN 1492-2 | **Type GRS :** Conforme EN 1492-2 | **Type GRS :** Conform EN 1492-2 | **Type GRS:** Volgens EN 1492-2

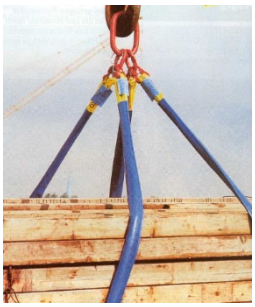

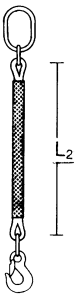


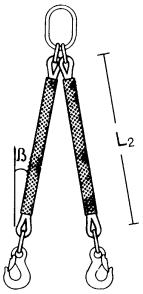


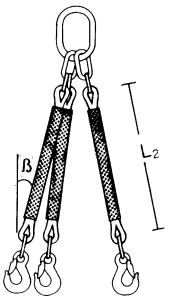


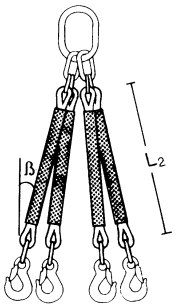


| WLL/CMU Symm. Load in Kg | β 0° | β [0°⇔ 45°] – [45°⇔ 60°] | β [0°⇔ 45°] – [45°⇔ 60°] | β [0°⇔ 45°] – [45°⇔ 60°] |
|---|---|---|---|---|
| **type** | **G1** | **G2** | **G3** | **G4** |
| **GRS 10** | 1000 | 1400 - 1000 | 2100 - 1500 | 2100 - 1500 |
| **GRS 20** | 2000 | 2800 - 2000 | 4200 - 3000 | 4200 - 3000 |
| **GRS 30** | 3000 | 4200 - 3000 | 6300 - 4500 | 6300 - 4500 |
| **GRS 40** | 4000 | 5600 - 4000 | 8400 - 6000 | 8400 - 6000 |
| **GRS 50** | 5000 | 7000-5000 | 10500 - 7500 | 10500 - 7500 |
| **GRS-60** | 6000 | 8400-6000 | 12600 - 9000 | 12600 - 9000 |
| **GRS 80** | 8000 | 11200-8000 | 16800 - 12000 | 16800 -12000 |
| **GRS 100** | 10000 | 14000-10000 | 21000 - 15000 | 21000 -15000 |
| **GRS 150** | 15000 | 21200-15000 | 31500 - 22400 | 31500 - 22400 |

**Type FN** Lasthaak voor hijsband | **Type FN** Crochet pour sangles de levage | **Type FN** Hook for lifting slings | **Type FN** Sicherheitslasthaak fur hebebänder

| Nominale maat Désignation Nominal size Nenngrösse | WLL CMU Kg | K mm | P mm | W mm | T mm | H mm | Kg | Art.NR Code Art. Stock No. Art.Nr. | € |
|---|---|---|---|---|---|---|---|---|---|
| 1 | 1000 | 79 | 28 | 45 | 22 | 26 | 0.8 | 09820610 | |
| 2 | 2000 | 87 | 34 | 71 | 25 | 35 | 1.6 | 09820620 | |
| 3 | 3000 | 96 | 37 | 104 | 29 | 38 | 2.4 | 09820630 | |
| 5 | 5000 | 154 | 40 | 185 | 40 | 50 | 7.3 | 09820650 | |

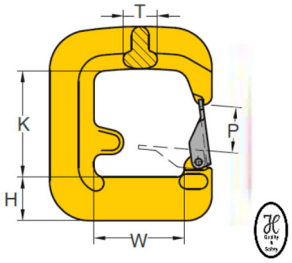


**Type CJX** Joker Textielhaak | **Type CJX** Joker Crochet de textile | **Type CJX** Joker Textile hook | **Type CJX** Joker Textil haak

| Kleur couleur color Farbe Code | Nominale maat Désignation Nominal size Nenngrösse | A mm | B mm | C mm | D mm | G mm | H mm | P mm | T mm | Kg | Art.NR Code Art. Stock No. Art.Nr. | € |
|---|---|---|---|---|---|---|---|---|---|---|---|---|
| | 1 ton | 78 | 123 | 12 | 41 | 17 | 20 | 16 | 31 | 0.7 | CJX8CX01 | |
| | 2 ton | 91 | 148 | 19 | 55 | 21 | 26 | 17 | 40 | 1.2 | CJX8CX02 | |
| | 3 ton | 113 | 175 | 21 | 55 | 25 | 32 | 25 | 50 | 2.2 | CJX8CX03 | |
| | 4 ton | 133 | 223 | 40 | 70 | 36 | 40 | 36 | 60 | 4.5 | CJX8CX04 | |
| | 5 ton | 133 | 223 | 40 | 70 | 36 | 40 | 36 | 60 | 4.5 | CJX8CX05 | |
| | 6 ton | 133 | 223 | 40 | 70 | 36 | 40 | 36 | 60 | 4.5 | CJX8CX06 | |
| | 8 ton | 188 | 302 | 50 | 105 | 40 | 60 | 42 | 80 | 65 | CJX8CX08 | |
| | 10 ton | 188 | 302 | 50 | 105 | 40 | 60 | 42 | 80 | 65 | CJX8CX10 | |

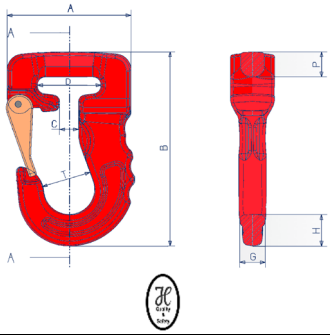

## Hijsnet voor voertuigen
## PES-Wheelnet Lift
SF 7:1 (EN 1492-1)

## Filet de levage pour véhicules
## PES-Wheelnet Lift
SF 7:1 (EN 1492-1)

## Lifting net for vehicles
## PES-Wheelnet Lift
SF 7:1 (EN 1492-1)

## Hebenetz für Fahrzeuge
## PES-Wheelnet Lift
SF 7:1 (EN 1492-1)



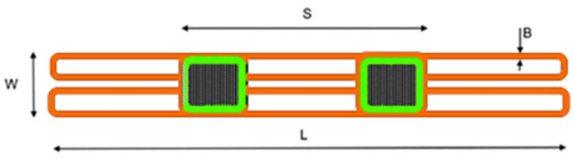


CE Europa/EEC

| WLL / Pair [t] | WLL / Pair [t] | L m | S m | W m | B mm | Art.NR Code Art. Stock No. Art.Nr. |
|---|---|---|---|---|---|---|
| 9 | 4.5 | 8 | 2.5 | 1.5 | 75 | WHNT09T080X150 |
| 15 | 7.5 | 11.5 | 3.5 | 1.5 | 150 | WHNT15T115X150 |
| 20 | 10 | 11.5 | 3.5 | 1.7 | 180 | WHNT20T115X170 |
| 25 | 12.5 | 11.5 | 3.5 | 1.7 | 240 | WHNT25T115X170 |
| 30 | 15 | 11.5 | 3.8 | 1.7 | 300 | WHNT30T115X170 |
| 40 | 20 | 11.5 | 3.8 | 1.9 | 300 | WHNT40T115X190 |

Speciale hijsnetten die in het algemeen worden gebruikt om voertuigen zoals auto's, vrachtwagens en bussen uit laadruimen van schepen en dergelijke te tillen. Voertuigen kunnen op de netten worden gerold om ze vervolgens gemakkelijk op te tillen.

Filets de levage spéciaux généralement utilisés pour soulever des véhicules tels que des voitures, des camions et des autobus des cales de navires et autres. Les véhicules peuvent être enroulés sur les mailles du filet pour être facilement levés.

Special lifting nets generally used to lift vehicles such as cars, trucks and buses from cargo holds of ships and the like. Vehicles can be rolled up on the nets for easy lifting.

Spezielle Netze, die üblicherweise zum Heben von Fahrzeugen wie Autos, LKWs und Bussen aus Schiffsladeräumen und anderen Bereichen verwendet werden. Die Fahrzeuge können auf die Maschen des Netzes gerollt werden, sodass sie einfach angehoben werden können.

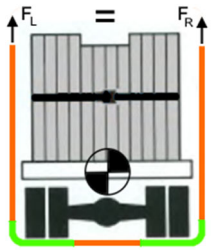


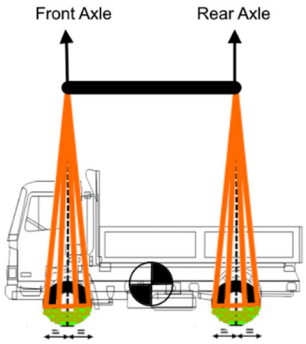


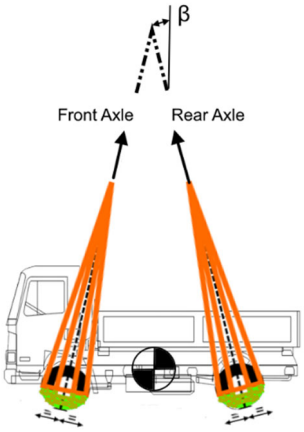


**Veiligheidsinstructies Wheelnet :**

- Gebruik door personen met de nodige vakkennis
- Gebruik Wheelnet altijd in paar
- Wheelnet is geschikt voor1 as met 2 wielen
- Nooit een beschadigd Wheelnet gebruiken !
- Plaats de wielen centraal & symmetrisch gepositioneerd op het raster van het wheelnet
- Hou rekening met het zwaartepunt van de last en bepaal de gewichtsverdeling tussen voor en achteras.
- De last moet steeds in evenwicht zijn
- De omsluiting van het wielnet rond de wielen is minstens gelijk aan 30% van de wieldiameter – zodanig dat elk wiel statisch is opgesloten in het wielnet bij het hijsen
- Hou rekening met de aanslaghoek β
- Wheelnet altijd beschermen tegen scherpe kanten met aangepast beschermmateriaal
- Nooit onder de last lopen.
- Nooit blootstellen aan: chemische produkten, extreme temperaturen en direct zonlicht.

**Instructions de sécurité Wheelnet :**

- Utilisation par des personnes ayant les compétences nécessaires
- Toujours utiliser Wheelnet par paire
- Wheelnet convient pour 1 axe avec 2 roues
- Positionner les roues de manière centrale et symétrique sur les mailles du filet du Wheelnet
- Tenir compte du centre de gravité de la charge et de la répartition du poids entre axe avant et axe arrière.
- La charge doit toujours être équilibrée.
- Le zone des mailles du filet de levage autour des roues est au moins égale à 30 % du diamètre de la roue - de sorte que chaque roue soit statiquement enfermée dans des mailles du filet de levage lors du levage.
- Tenir compte de l'angle β de l'élingue.
- Toujours protéger le Wheelnet des arêtes tranchantes à l'aide d'un matériau de protection spécifique..
- Ne jamais utiliser un Wheelnet endommagé !
- Ne jamais marcher sous la charge.
- Ne jamais l'exposer aux produits chimiques, aux températures extrêmes et à la lumière directe du soleil.



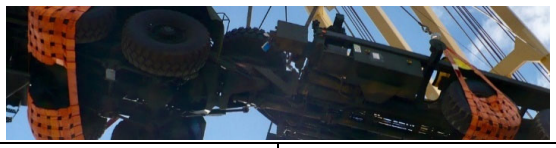

**Safety Instructions Wheelnet :**

- Use by persons with the necessary professional knowledge
- Always use Wheelnet in pairs
- Wheelnet is suitable for 1 axle with 2 wheels
- Position the wheels centrally & symmetrically on the grid of the wheelnet
- Take into account the center of gravity of the load and weight distribution between front and rear axle.
- The load should always be balanced
- The enclosure of the wheelnet around the wheels is at least equal to 30% of the wheel diameter - such that each wheel is statically enclosed in the wheelnet when lifting
- Take into account the angle β of inclination
- Always protect the Wheelnet from sharp edges with suitable protective material
- Never use a damaged Wheelnet !
- Never walk under the load.
- Never expose it to: chemical products, extreme temperatures and direct sunlight.

**Sicherheitshinweise Wheelnet :**

- Verwendung durch Personen mit den erforderlichen Fachkenntnissen
- Wheelnet immer paarweise verwenden
- Wheelnet ist für 1 Achse mit 2 Rädern geeignet
- Positioniere die Räder mittig und symmetrisch auf dem Gitter des Radnetzes
- Berücksichtigen Sie den Schwerpunkt der Ladung und die Gewichtsverteilung zwischen Vorder- und Hinterachse.
- Die Ladung sollte immer ausgeglichen sein
- Der Umfang des Radkastens um die Räder beträgt mindestens 30 % des Raddurchmessers - so dass jedes Rad beim Anheben statisch vom Radkasten umschlossen ist
- Berücksichtigen Sie den Neigungswinkel β
- Schützen Sie das Radnetz immer mit geeignetem Schutzmaterial vor scharfen Kanten
- Benutze niemals ein beschädigtes Wheelnet!
- Gehe niemals unter die Last.
- Setze es niemals chemischen Produkten, extremen Temperaturen und direktem Sonnenlicht aus.

| GEBRUIKSAANWIJZING -INSTRUCTIONS D'UTILISATION | |
|---|---|
| 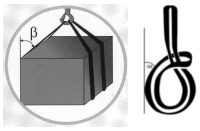 | Rekening houden met de hoek van de aanslaan.<br>Tenir compte de l'angle de travail.<br>Consider the angle of inclination<br>Berücksichtigen Sie dabei den Neigungswinkel |
|  | Gewicht van de lading controleren.<br>Contrôler les poids de la charge.<br>Check the weight of the load.<br>Kontrolle von die ladung |
|  | Nooit beschadigde hijsbanden gebruiken !<br>Ne jamais utiliser des sangles endommagées !<br>Never use damaged slings!<br>Verwenden Sie niemals beschädigte Schlingen! |
|  | Enkel hijsbanden met duidelijk leesbaar label gebruiken.<br>N'utiliser que des élingues correctement identifiées.<br>Only use slings with clearly legible label.<br>Nur Schlingen verwenden mit deutlich lesbaren Etikett. |
| 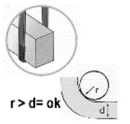 | De hijsband beschermen tegen scherpe voorwerpen met beschermhoes<br>Protéger les sangles des arêtes vives avec des gaine de protection<br>Protect the slings against sharp objects with proctection covers<br>Der Schling schützen vor scharfen Gegenständen mit Schutzmittel |
|  | Leg nooit knopen in rondstroppen of hijsbanden<br>Ne jamais nouer les sangles ou les élingues.<br>Never put knots in slings or roundslings<br>Niemals Knoten in Schlingen oder Rundschlingen |
| 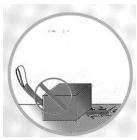 | Nooit de hijsband van onder de lading trekken.<br>Ne jamais traîner une charge au sol à l'aide de sangles.<br>Never pull the strap from under the load<br>Ziehen Sie niemals den Gurt von unter der Last |
|  | De last moet steeds in evenwicht zijn.<br>Le produit élevé doit être tous le temps équilibré.<br>The load must always be in balance.<br>Die Last muss immer ausgeglichen sein. |
|  | Hijsband moet vrij kunnen bewegen onder de last.<br>L'elingues doit être mobile au-dessous de la charge.<br>Lifting strap should move freely under the load.<br>Gürte sollte immer frei unter der Last bewegen. |
|  | Nooit onder de last lopen.<br>Ne jamais courir sous le matériel suspendu.<br>Never walk under the load<br>Keine personen unter der Last |
| 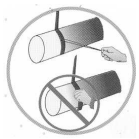 | De last correct verplaatsen.<br>Manipuler la charge correctement.<br>Move the load correctly.<br>Last richtig manipulieren |
|  | Nooit blootstellen aan: chemische produkten, extreme temperaturen en direct zonlicht.<br>Ne jamais exposer les sangles au: produits chimiques, température extrème et rayons solaires UV.<br>Do not expose to: chemicals, extreme temperatures and direct UV-sunlight.<br>Gebrauch verboten bei: Chemikalien, extreme Temperaturen und direkte Sonneneinstrahlung . |

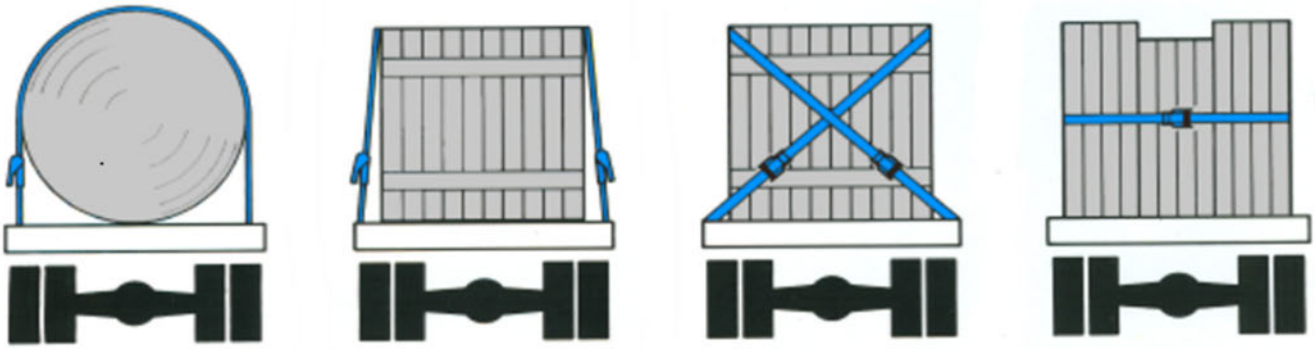

SJORMATERIALEN - SYSTEME D'ARRIMAGE - LASHING COMPONENTS - LADUNGSSICHERUNG

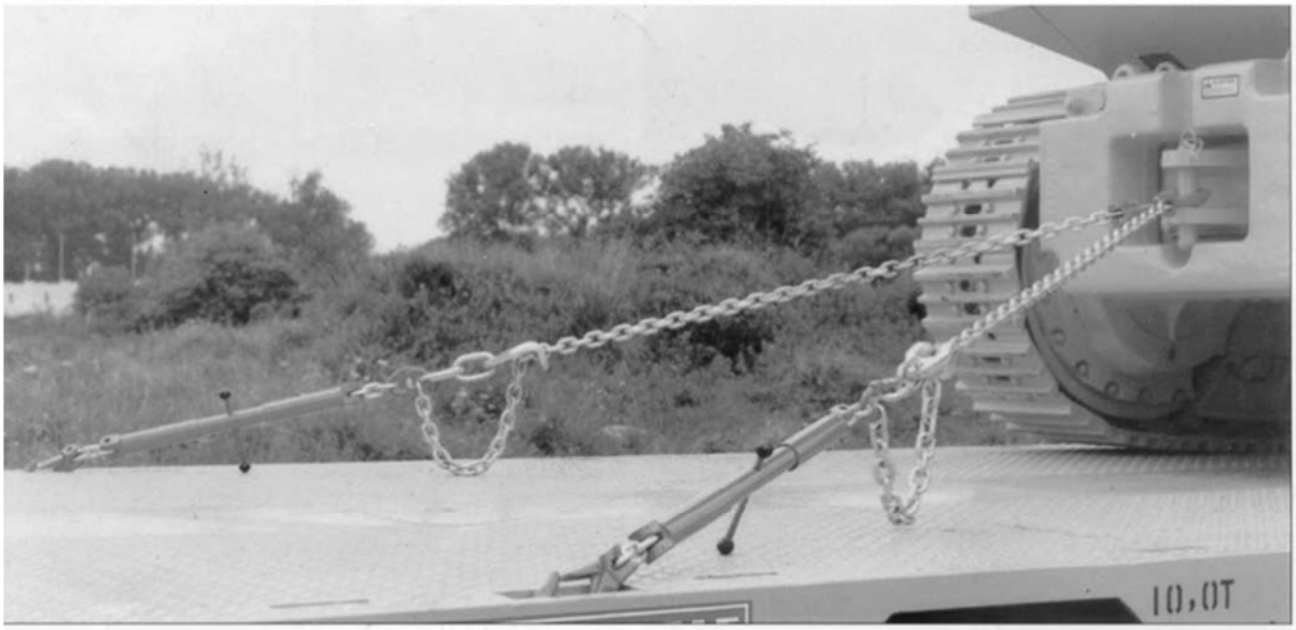





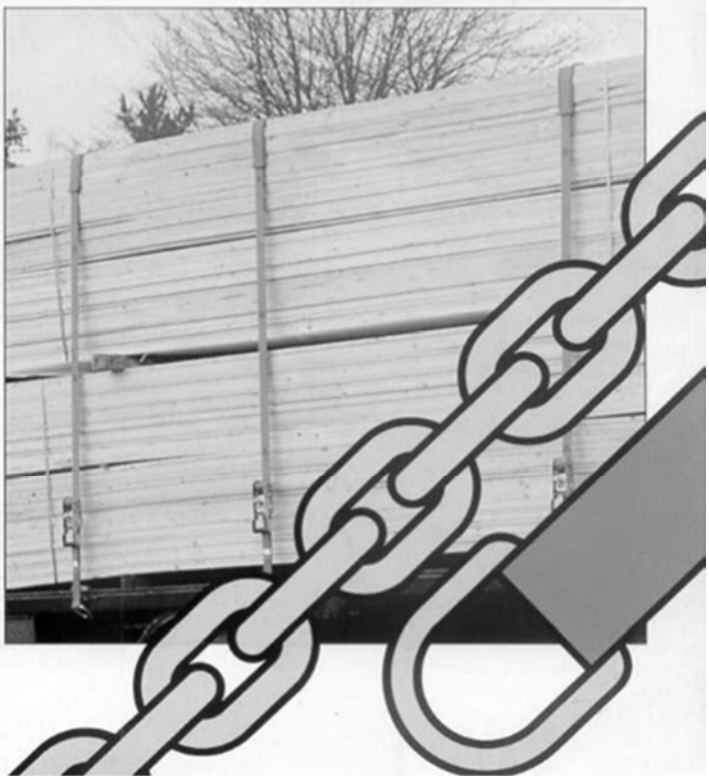



**LADINGZEKERING VOOR WEGTRANSPORT CONFORM EN12195-3**
**SYSTÉMES D'ARRIMAGE POUR TRANSPORT ROUTIER CONFORME EN12195-3**
**LASHING SYSTEMS FOR ROAD TRANSPORT CONFORM EN12195-3**
**LADUNGSSICHERUNG FOR STRASSENVERKEHR KONFORM EN12195-3**



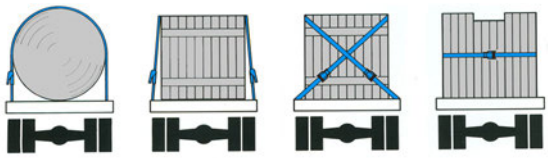

| Ratelspanner | Tendeur à cliquet | Ratchet - Load Binder | Ratschen Lastenspanner |
|---|---|---|---|
| Type RLSP | Type RLSP | Type RLSP | Type RLSP |
| Volgens EN 12195-3 | Conforme EN 12195-3 | Conform EN 12195-3 | Volgens EN 12195-3 |
| Grade 80 | Grade 80 | Grade 80 | Grade 80 |



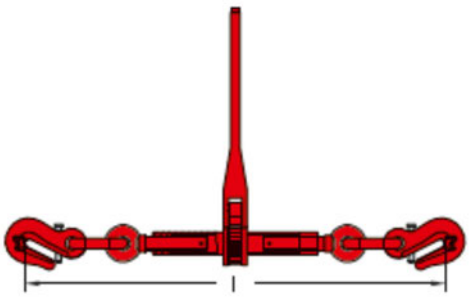

| Nominale maat<br>Désignation<br>Nominal size<br>Nenngrösse | Trekkracht<br>Charge de tendeur<br>Pull limit<br>Zugkraft<br>(LC-daN) | Handgreep<br>Manivel<br>Handle<br>Hebel | Stf<br>(daN) | l<br>MIN. | l<br>MAX | Spanlengte<br>Longeur-tendeur<br>Take-up<br>Spannlänge | Art.NR<br>Code Art.<br>Stock No.<br>Art.Nr. |
|---|---|---|---|---|---|---|---|
| 6mm | 2200 | 190 | 550 | 412 | 502 | 90 | 256454506 |
| 8mm | 4000 | 190 | 1000 | 588 | 738 | 150 | 256454508 |
| 10mm | 6300 | 220 | 1575 | 630 | 780 | 150 | 256454510 |
| 13mm | 10000 | 350 | 1500 | 722 | 872 | 160 | 256454513 |
| 16mm | 16000 | 350 | 2400 | 784 | 914 | 163 | 256454516 |

| Ratelspanner | Tendeur à cliquet | Ratchet - Load Binder | Ratschen Lastenspanner |
|---|---|---|---|
| Type RLSPZ | Type RLSPZ | Type RLSPZ | Type RLSPZ |
| Volgens EN 12195-3 | Conforme EN 12195-3 | Conform EN 12195-3 | Volgens EN 12195-3 |
| Grade 80 | Grade 80 | Grade 80 | Grade 80 |



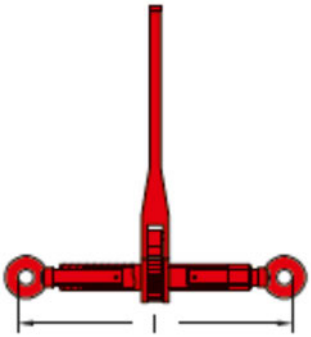

| Nominale maat<br>Désignation<br>Nominal size<br>Nenngrösse | Trekkracht<br>Charge de tendeur<br>Pull limit<br>Zugkraft<br>(LC-daN) | Handgreep<br>Manivel<br>Handle<br>Hebel | Stf<br>(daN) | l<br>MIN. | l<br>MAX | Spanlengte<br>Longeur-tendeur<br>Take-up<br>Spannlänge | Art.NR<br>Code Art.<br>Stock No.<br>Art.Nr. |
|---|---|---|---|---|---|---|---|
| 8mm | 4000 | 190 | 1000 | 360 | 510 | 150 | 256452108 |
| 10mm | 6300 | 220 | 1575 | 360 | 510 | 150 | 256452110 |
| 13mm | 10000 | 350 | 1500 | 366 | 516 | 150 | 256452113 |
| 16mm | 16000 | 350 | 2400 | 390 | 520 | 130 | 256452116 |

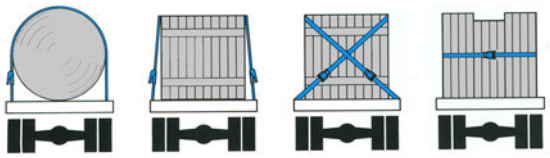

| Sjorketting met ratelspanner<br>Type RLSP-AB-CX<br>Volgens EN 12195-3<br>Grade 80 / EN818-2 | Chaine d'arrimage avec tendeur<br>Type RLSP-AB-CX<br>Conforme EN 12195-3<br>Grade 80 / EN818-2 | Lashingchain with Load Binder<br>Type RLSP-AB-CX<br>Conform EN 12195-3<br>Grade 80 / EN818-2 | Zurrkette mit Ratschenlastspanner<br>Type RLSP-AB-CX<br>Volgens EN 12195-3<br>Grade 80 / EN818-2 |
|---|---|---|---|

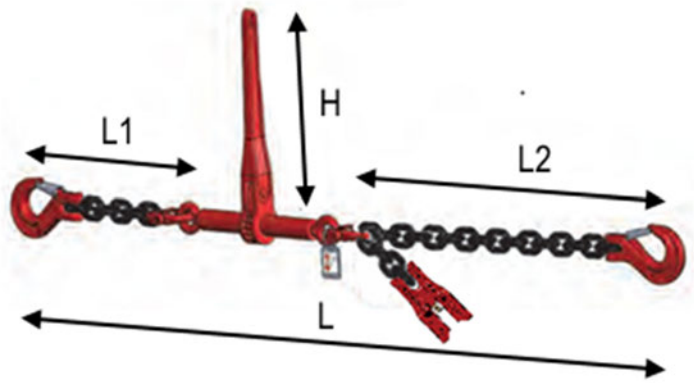


**Varianten op aanvraag**
**Variants sur demande**
**Tailor made on request**
**Varianten auf anfrage**

| Nominale maat<br>Désignation<br>Nominal size<br>Nenngrösse | Trekkracht<br>Charge de tendeur<br>Pull limit<br>Zugkraft<br>(LC-daN) | Stf<br>(daN) | H | L1<br>mm | L2<br>mm | L<br>mm | Spanlengte<br>Longeur-tendeur<br>Take-up<br>Spannlänge | €<br>+/- 1m | Art.NR<br>Code Art.<br>Stock No.<br>Art.Nr. | € |
|---|---|---|---|---|---|---|---|---|---|---|
| 6mm | 2200 | 550 | 190 | 224 | 3044 | 3500 | 90 | | RLSPABCX06 | |
| 8mm | 4000 | 1000 | 190 | 293 | 2847 | 3500 | 150 | | RLSPABCX08 | |
| 10mm | 6300 | 1575 | 220 | 357 | 2783 | 3500 | 150 | | RLSPABCX10 | |
| 13mm | 10000 | 1500 | 350 | 450 | 2684 | 3500 | 150 | | RLSPABCX13 | |
| 16mm | 16000 | 2400 | 350 | 546 | 2564 | 3500 | 130 | | RLSPABCX16 | |

| Set Ratelspanner + sjorketting<br>Type RLSP-SB<br>Volgens EN 12195-3<br>Grade 80 / EN818-2 | Tendeur à cliquet + Chaine d'arrimage<br>Type RLSP-SB<br>Conforme EN 12195-3<br>Grade 80 / EN818-2 | Ratchet-Load Binder + Lashing Chain<br>Type RLSP-SB<br>Conform EN 12195-3<br>Grade 80 / EN818-2 | Ratschenlastenspanner + Zurrkette<br>Type RLSP-SB<br>Volgens EN 12195-3<br>Grade 80 / EN818-2 |
|---|---|---|---|

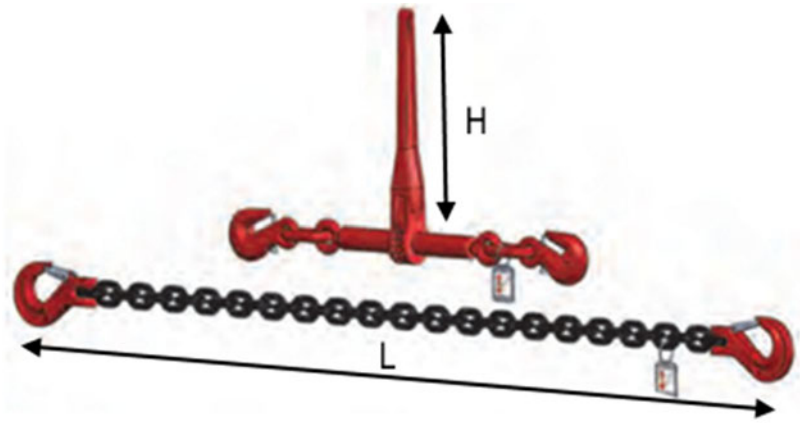


**Varianten op aanvraag**
**Variants sur demande**
**Tailor made on request**
**Varianten auf anfrage**

| Nominale maat<br>Désignation<br>Nominal size<br>Nenngrösse | Trekkracht<br>Charge de tendeur<br>Pull limit<br>Zugkraft<br>(LC-daN) | Stf<br>(daN) | Handgreep<br>Manivel<br>Handle<br>Hebel<br>H | L<br>mm | Spanlengte<br>Longeur-tendeur<br>Take-up<br>Spannlänge | €<br>+/- 1m | Art.NR<br>Code Art.<br>Stock No.<br>Art.Nr. | € |
|---|---|---|---|---|---|---|---|---|
| 6mm | 2200 | 550 | 190 | 3500 | 90 | | RLSPSB06 | |
| 8mm | 4000 | 1000 | 190 | 3500 | 150 | | RLSPSB08 | |
| 10mm | 6300 | 1575 | 220 | 3500 | 150 | | RLSPSB10 | |
| 13mm | 10000 | 1500 | 350 | 3500 | 150 | | RLSPSB13 | |
| 16mm | 16000 | 2400 | 350 | 3500 | 130 | | RLSPSB16 | |

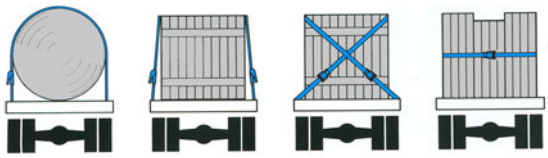

| Sjorketting met ratelspanner | Chaine d'arrimage avec tendeur | Lashingchain with Load Binder | Zurrkette mit Ratschenlastspanner |
|---|---|---|---|
| Type RLSP-AG-CX | Type RLSP-AG-CX | Type RLSP-AG-CX | Type RLSP-AG-CX |
| Volgens EN 12195-3 | Conforme EN 12195-3 | Conform EN 12195-3 | Volgens EN 12195-3 |
| Grade 80 / EN818-2 / Verzinkt | Grade 80 / EN818-2 / Galvanisé | Grade 80 / EN818-2 / Galvanised | Grade 80 / EN818-2 / Verzinkt |

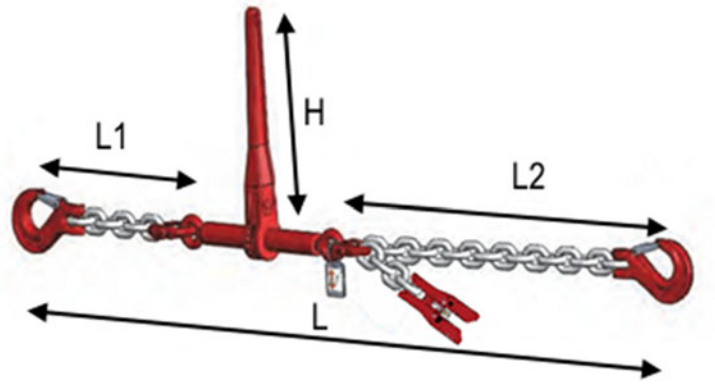


**Varianten op aanvraag**
**Variants sur demande**
**Tailor made on request**
**Varianten auf anfrage**

| Nominale maat<br>Désignation<br>Nominal size<br>Nenngrösse | Trekkracht<br>Charge de tendeur<br>Pull limit<br>Zugkraft<br>(LC-daN) | Stf<br>(daN) | Handgreep<br>Manivel<br>Handle<br>Hebel<br>H | L1<br>mm | L2<br>mm | L<br>mm | Spanlengte<br>Longeur-tendeur<br>Take-up<br>Spannlänge | €<br>+/- 1m | Art.NR<br>Code Art.<br>Stock No.<br>Art.Nr. | € |
|---|---|---|---|---|---|---|---|---|---|---|
| 6mm | 2200 | 550 | 190 | 224 | 3044 | 3500 | 90 | | RLSPAGCX06 | |
| 8mm | 4000 | 1000 | 190 | 293 | 2847 | 3500 | 150 | | RLSPAGCX08 | |
| 10mm | 6300 | 1575 | 220 | 357 | 2783 | 3500 | 150 | | RLSPAGCX10 | |
| 13mm | 10000 | 1500 | 350 | 450 | 2684 | 3500 | 150 | | RLSPAGCX13 | |
| 16mm | 16000 | 2400 | 350 | 546 | 2564 | 3500 | 130 | | RLSPAGCX16 | |

| Set Ratelspanner + sjorketting | Tendeur à cliquet + Chaine d'arrimage | Ratchet-Load Binder + Lashing Chain | Ratschenlastenspanner + Zurrkette |
|---|---|---|---|
| Type RLSP-SG | Type RLSP-SG | Type RLSP-SG | Type RLSP-SG |
| Volgens EN 12195-3 | Conforme EN 12195-3 | Conform EN 12195-3 | Volgens EN 12195-3 |
| Grade 80 / EN818-2 / Verzinkt | Grade 80 / EN818-2 / Galvanisé | Grade 80 / EN818-2 / Galvanised | Grade 80 / EN818-2 / Verzinkt |

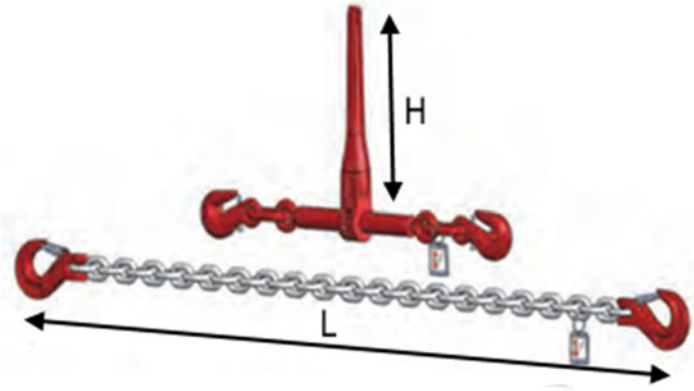


**Varianten op aanvraag**
**Variants sur demande**
**Tailor made on request**
**Varianten auf anfrage**

| Nominale maat<br>Désignation<br>Nominal size<br>Nenngrösse | Trekkracht<br>Charge de tendeur<br>Pull limit<br>Zugkraft<br>(LC-daN) | Stf<br>(daN) | Handgreep<br>Manivel<br>Handle<br>Hebel<br>H | L<br>mm | Spanlengte<br>Longeur-tendeur<br>Take-up<br>Spannlänge | €<br>+/- 1m | Art.NR<br>Code Art.<br>Stock No.<br>Art.Nr. | € |
|---|---|---|---|---|---|---|---|---|
| 6mm | 2200 | 550 | 190 | 3500 | 90 | | RLSPSG06 | |
| 8mm | 4000 | 1000 | 190 | 3500 | 150 | | RLSPSG08 | |
| 10mm | 6300 | 1575 | 220 | 3500 | 150 | | RLSPSG10 | |
| 13mm | 10000 | 1500 | 350 | 3500 | 150 | | RLSPSG13 | |
| 16mm | 16000 | 2400 | 350 | 3500 | 130 | | RLSPSG16 | |

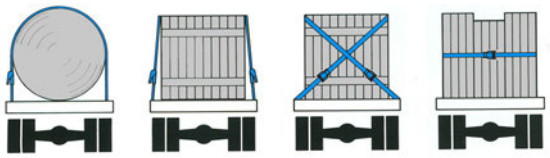

Lasbeugel met veer
Type APAM

Anneaux de levage à souder avec resort
Type APAM

Weld-on lashing eye with spring
Type APAM

Anschweiss-bügel mit feder
Type APAM

| Nominale maat<br>Désignation<br>Nominal size<br>Nenngrösse | WLL<br>CMU<br><br>Kg | Trekkracht<br>Charge de tendeur<br>Pull limit<br>Zugkraft<br>(LC-daN) | a<br>mm | b<br>mm | d<br>mm | h<br>mm | t<br>mm | w<br>mm | Art.NR<br>Code Art.<br>Stock No.<br>Art.Nr. | |
|---|---|---|---|---|---|---|---|---|---|---|
| 1 | 1120 | 2240 | 36 | 38 | 13 | 38.5 | 67 | 40 | 32401120 | |
| 2 | 2000 | 4000 | 38 | 40 | 14 | 43 | 78 | 42 | 32402000 | |
| 3 | 3150 | 6300 | 43 | 45 | 17 | 48.5 | 83 | 45 | 32403150 | |
| 5 | 5300 | 10600 | 50 | 60 | 22 | 57 | 101 | 55 | 32405300 | |
| 8 | 8000 | 16000 | 65 | 70 | 26 | 67 | 118 | 70 | 32408000 | |
| 15 | 15000 | 30000 | 90 | 90 | 34 | 93.5 | 159 | 97 | 32415000 | |

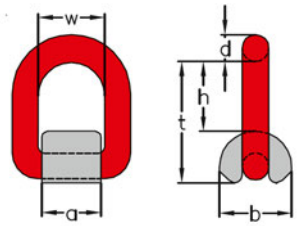


Lasbeugel zonder veer
Type APAZ

Anneaux de levage à souder sans resort
Type APAZ

Weld-on lashing eye without spring
Type APAZ

Anschweiss-bügel ohne feder
Type APAZ

| Nominale maat<br>Désignation<br>Nominal size<br>Nenngrösse | WLL<br>CMU<br><br>Kg | Trekkracht<br>Charge de tendeur<br>Pull limit<br>Zugkraft<br>(LC-daN) | a<br>mm | b<br>mm | d<br>mm | h<br>mm | t<br>mm | w<br>mm | Art.NR<br>Code Art.<br>Stock No.<br>Art.Nr. | |
|---|---|---|---|---|---|---|---|---|---|---|
| 1 | 1120 | 2240 | 36 | 38 | 13 | 38.5 | 67 | 40 | 32421120 | |
| 2 | 2000 | 4000 | 38 | 40 | 14 | 43 | 78 | 42 | 32422000 | |
| 3 | 3150 | 6300 | 43 | 45 | 17 | 48.5 | 83 | 45 | 32423150 | |
| 5 | 5300 | 10600 | 50 | 60 | 22 | 57 | 101 | 55 | 32425300 | |
| 8 | 8000 | 16000 | 65 | 70 | 26 | 67 | 118 | 70 | 32428000 | |
| 15 | 15000 | 30000 | 90 | 90 | 34 | 93.5 | 159 | 97 | 32429000 | |

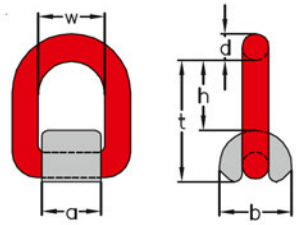


Lasbaar Sjoroog – 180°
met dubbele lasbasis
Type 821X
Niet geschikt voor hijsdoeleinden

Anneaux d'arrimage – 180°
à souder avec double base
Type 821X
Interdit pour operation de lavage.

Weld-on Lashing Ring -180°
with double welding base
Type 821X
No Lifting Use.

Anschweiss-Zurrbügel -180°
Mit doppelter Anschweissbasis
Type 821X
Nicht zum heben.

| Trekkracht<br>Charge de tendeur<br>Pull limit<br>Zugkraft<br>(LC-daN) | A<br><br>mm | B<br><br>mm | C<br><br>mm | D<br><br>mm | E<br><br>mm | F<br><br>mm | G<br><br>mm | H<br><br>mm | Art.NR<br>Code Art.<br>Stock No.<br>Art.Nr. |
|---|---|---|---|---|---|---|---|---|---|
| 8000 | 14 | 65 | 48 | 29 | 134 | 14 | 60 | 79 | C821X08 |
| 13400 | 20 | 83 | 60 | 39 | 169 | 16 | 88 | 103 | C821X134 |
| 20000 | 22 | 96 | 65 | 48 | 196 | 19 | 98 | 118 | C821X20 |
| 30000 | 31 | 126 | 90 | 55 | 264 | 29 | 127 | 155 | C821X32 |

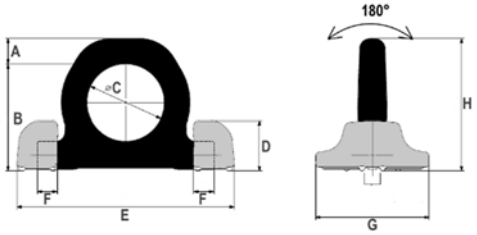


EN12640 - EN75410 - EN12195-1

Lasbaar Sjoroog – 180°
met enkele lasbasis
Type 831X
Niet geschikt voor hijsdoeleinden

Anneaux d'arrimage – 180°
à souder avec base
Type 831X
Interdit pour operation de lavage.

Weld-on Lashing Ring -180°
with welding base
Type 831X
No Lifting Use.

Anschweiss-Zurrbügel -180°
Mit Anschweissbasis
Type 831X
Nicht zum heben.

| Trekkracht<br>Charge de tendeur<br>Pull limit<br>Zugkraft<br>(LC-daN) | A<br><br>mm | B<br><br>mm | C<br><br>mm | D<br><br>mm | E<br><br>mm | F<br><br>mm | G<br><br>mm | H<br><br>mm | Art.NR-Code Art.<br>Stock No.-Art.Nr.<br>Met veer<br>Avec resort<br>With spring<br>Mit Feder | <br><br>Zonder veer<br>Sans resort<br>Without spring<br>Ohne Feder |
|---|---|---|---|---|---|---|---|---|---|---|
| 3000 | 14 | 65 | 38 | 25 | 66 | 16 | 31 | 79 | C831X03M | C831X03 |
| 5000 | 16 | 75 | 45 | 27 | 77 | 18 | 34.5 | 91 | C831X05M | C831X05 |
| 8000 | 18 | 84 | 51 | 32 | 87 | 20 | 40 | 102 | C831X08M | C831X08 |
| 13400 | 24 | 117 | 67.3 | 44 | 115 | 26 | 58.5 | 141 | C831X134M | C831X134 |
| 20000 | 31 | 126 | 67 | 55 | 129 | 28.5 | 70.5 | 157 | C831X20M | C831X20 |
| 30000 | 45 | 174 | 100 | 69 | 190 | 42 | 87 | 219 | C831X32M | C831X32 |

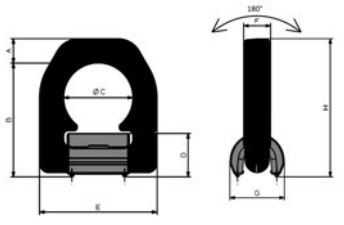

EN12640 - EN75410 - EN12195-1

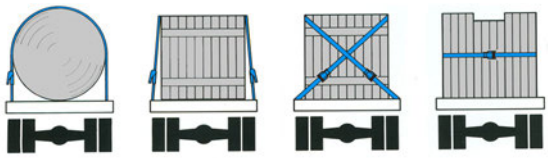

## Ketting EN 818-2 - Grade 80 Zwart gelakt / Chaîne EN 818-2 - Grade 80 Laquées noir / Chain EN 818-2 - Grade 80 Black Painted / Kette EN 818-2 Grade 80 - Schwarz lackiert

| Nominale maat Désignation Nominal size Nenngrösse | | WLL CMU | Trekkracht Charge de tendeur Pull limit Zugkraft | t | b | Kg | Standard L | Art.NR Code Art. Stock No. Art.Nr. | € |
|---|---|---|---|---|---|---|---|---|---|
| mm | inch | [t] | (LC-daN) | mm | mm | /m | m | | |
| 6-8 | 1/4 | 1.12 | 2200 | 18 | 8.0 | 0.8 | 50 | CNC1818206 | |
| 7-8 | 9/32 | 1.50 | 3000 | 21 | 10.5 | 1.1 | 50 | CNC1818207 | |
| 8-8 | 5/16 | 2.00 | 4000 | 24 | 10.8 | 1.5 | 50 | CNC1818208 | |
| 10-8 | 3/8 | 3.15 | 6300 | 30 | 13.5 | 2.3 | 50 | CNC1818210 | |
| 13-8 | 1/2 | 5.30 | 10600 | 39 | 17.5 | 3.8 | 50 | CNC1818213 | |
| 16-8 | 5/8 | 8.00 | 16000 | 48 | 21.5 | 6.1 | 50 | CNC1818216 | |
| 20-8 | ¾ | 12.5 | 25000 | 60 | 27.0 | 9.0 | 50 | CNC1818220 | |
| 22-8 | 7/8 | 15 | 30000 | 66 | 29.5 | 10.9 | 50 | CNC1818222 | |
| 26-8 | 1 | 21.2 | 42400 | 78 | 35.0 | 15.2 | 50 | CNC1818226 | |




## Lashaak met klep Type TAHK / Crochet à godet à souder Type TAHK / Weld-on hook Type TAHK / Anschweisshaak Type TAHK

| Nominale maat Désignation Nominal size Nenngrösse WLL-CMU | a mm | b mm | c mm | h mm | l mm | m mm | Art.NR Code Art. Stock No. Art.Nr. | |
|---|---|---|---|---|---|---|---|---|
| 1.40[t] | 5 | 40 | 10 | 90 | 68 | 22 | 362706000 | |
| 2.50[t] | 5 | 50 | 10 | 115 | 90 | 30 | 362708000 | |
| 4.00[t] | 5 | 60 | 15 | 140 | 105 | 37 | 362710000 | |
| 6.70[t] | 5 | 70 | 15 | 175 | 135 | 47 | 362713000 | |
| 10.00[t] | 5 | 80 | 15 | 210 | 140 | 51 | 362716000 | |

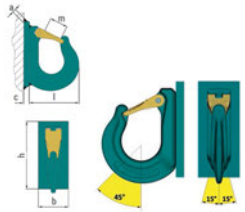

## Haak schroefbaar Type TAHKG / Crochet à boulonner Type TAHKG / Hook Bolt-on Type TAHKG / Anschraubhaak Type TAHKG

| Nominale maat Désignation Nominal size Nenngrösse WLL-CMU | b mm | c mm | d mm | h mm | l mm | m mm | t1 mm | t2 mm | a 8.8 | Art.NR Code Art. Stock No. Art.Nr. | |
|---|---|---|---|---|---|---|---|---|---|---|---|
| 1.40[t] | 100 | 10 | 13 | 100 | 68 | 22 | 60 | 70 | M12 | 362806000 | |
| 2.50[t] | 110 | 10 | 13 | 135 | 85 | 30 | 75 | 80 | M12 | 362808000 | |
| 4.00[t] | 130 | 12 | 17 | 155 | 110 | 37 | 100 | 95 | M16 | 362810000 | |
| 6.70[t] | 160 | 15 | 22 | 185 | 135 | 47 | 120 | 110 | M20 | 362813000 | |
| 10.00[t] | 180 | 15 | 26 | 220 | 140 | 51 | 150 | 120 | M24 | 362816000 | |



## Spindelspanner Grade 80 Type SPDJJ DIN EN 1677-1 / DIN EN 12195-3 / Elément de serrage de la tige Grade 80 Type SPDJJ DIN EN 1677-1 / DIN EN 12195-3 / Spindle tensioning devices Grade 80 Type SPDJJ DIN EN 1677-1 / DIN EN 12195-3 / Spindelspanner Grade 80 Type SPDJJ DIN EN 1677-1 / DIN EN 12195-3

| Nominale maat Désignation Nominal size Nenngrösse | Lifting WLL CMU [t] | Lashing LC Max [kN] | Thread Design mm | Range Min mm | Range Max mm | Take-Up mm | KG | Art.NR Code Art. Stock No. Art.Nr. | € |
|---|---|---|---|---|---|---|---|---|---|
| 6-8 | 1.12 | 22 | M12 | 230 | 320 | 90 | 1.00 | DK31801006 | |
| 8-8 | 2.00 | 40 | TR16 | 330 | 445 | 115 | 1.90 | DK31801008 | |
| 10-8 | 3.15 | 63 | TR22 | 460 | 670 | 220 | 4.15 | DK31801010 | |
| 13-8 | 5.30 | 100 | TR22 | 520 | 770 | 250 | 6.45 | DK31801013 | |
| 16-8 | 8.00 | 160 | TR30 | 540 | 790 | 250 | 9.45 | DK31801016 | |

DIN EN 1677-1: Gebruikt als hijskettingcomponent voor variabele lengte instelling van de kettingleng
DIN EN 12195-3: Gebruikt als sjorkettingcomponent voor variabele lengte instelling van de kettinleng

*DIN EN 1677-1: utilisé comme élément de chaîne de levage pour un réglage de la longueur des élingues*
*DIN EN 12195-3: utilisé comme élément de chaîne d'arrimage pour un réglage de la longueur de l'élingue*

DIN EN 1677-1-G80: Used as lifting chain component for variable length adjustment of chain sling.
DIN EN 12195-3-Grade80: Used as a lashing chain component for variable length adjustment of the chain sling

*DIN EN 1677-1: Verwendung als Hebekettenbauteil zur variablen Längenverstellung von Anschlagketten*
*DIN EN 12195-3: Verwendung als Zurrkettenbauteil zur variablen Längenverstellung des Kettengehänges*

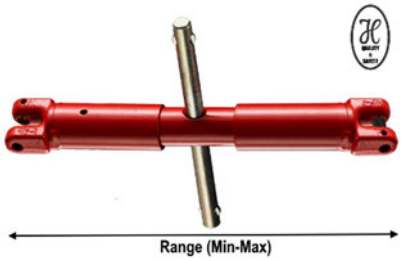


- Spindel met uitdraaiblokkering en schroefdraadbescherming
- Tige avec blocage de la sortie & avec protection du filetage
- Spindle with turn-out lock and thread protection
- Spindel Ausdrehsicherung und Gewindeschutz

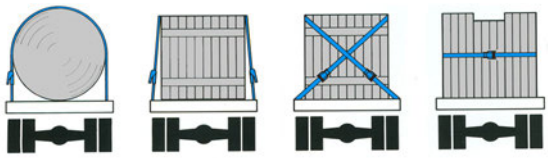

Sjorband met ratelgesp
Type DSJ

Sangle d'arrimage avec tendeur
Type DSJ

Lashing strap with Ratchet Tie Down
Type DSJ

Ratschen Zurrgurt
Typ DSJ

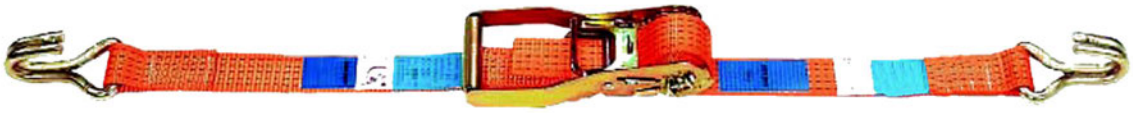

| VDI 2700,2701,2702<br>DIN - EN 12195-2 | | | DSJ50 Ergo XL | DSJ50 Ergo | DSJ50 | DSJ40 | DSJ20 | DJS15 | DSJ10 |
|---|---|---|---|---|---|---|---|---|---|
| | | |  |  |  |  |  |  |  |
| Breedte-Largeur-Width-Breite (mm) | | | 50 | 50 | 50 | 50 | 35 | 25 | 25 |
| LC (daN | Sjorkracht<br>Charge de tendeur<br>Lashing limit<br>Zugkraft |  | 2500 | 2500 | 2500 | 2000 | 1000 | 750 | 500 |
| | |  | 5000 | 5000 | 5000 | 4000 | 2000 | 1500 | 1000 |
| Stf (daN) | Standard Tension Force | | 750 | 500 | 250 | 250 | 200 | 250 | 250 |
| Type Terminations | UP |  | ◆ | ◆ | 8M-9M | 8M-9M | 6M | | 4M |
| | SP |  | 9M | 9M | 8M-9M | 8M-9M | 6M | 4M-6M | 4M |
| | PL |  | | ◆ | | ◆ | | | |
| | HT |  | | ◆ | | ◆ | ◆ | | |
| | FP |  | | ◆ | | ◆ | | | |
| | PH |  | | ◆ | | ◆ | | | |
| | TR |  | | ◆ | | ◆ | | | |
| | EL | Eindloos<br>Sans fin<br>Endless<br>Endlöse | ◆ | ◆ | ◆ | ◆ | ◆ | ◆ | ◆ |

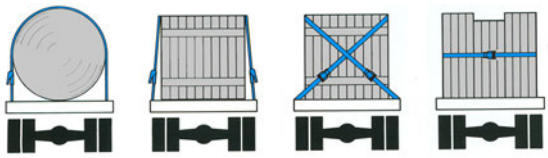

## Standard Program

| Sjorband met ratelgesp<br>Type DSJ | Sangle d'arrimage avec tendeur<br>Type DSJ | Lashing Ratchet Tie Down<br>Type DSJ | Ratschen Zurrgurt<br>Typ DSJ |
|---|---|---|---|

| EN 12195-2 | Termination | Art.Nr. | L1<br>m | L2<br>m | L<br>m | LC<br>daN | LC<br>daN | STF<br>daN | Breedte<br>Largeur<br>Width<br>Breite<br>mm |
|---|---|---|---|---|---|---|---|---|---|
| 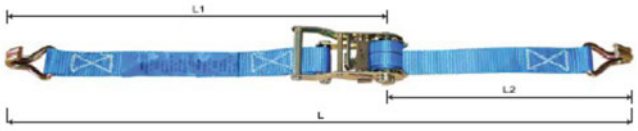 | SP | DSJ10SP04 | 0.5 | 3.5 | 4 | 500 | 1000 | 220 | 25 |
| 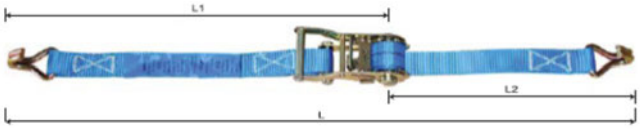 | SP | DSJ15SP04 | 0.5 | 3.5 | 4 | 750 | 1500 | 220 | 25 |
| | | DSJ15SP06 | 0.5 | 3.5 | 6 | 750 | 1500 | 220 | 25 |
| 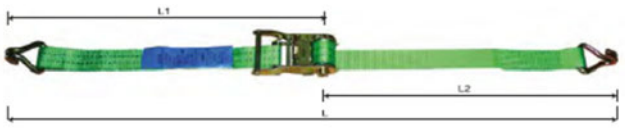 | SP | DSJ20SP06 | 0.5 | 5.5 | 6 | 1000 | 2000 | 220 | 35 |
| 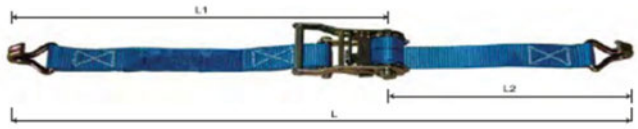 | SP | DSJ40SP08 | 0.5 | 7.5 | 8 | 2000 | 4000 | 500 | 50 |
| | SP | DSJ40SP09 | 0.5 | 8.5 | 9 | 2000 | 4000 | 500 | 50 |
| 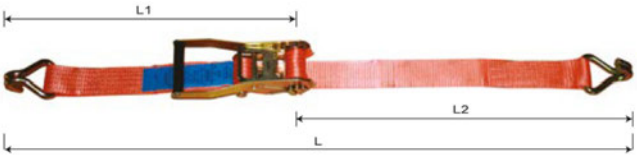 | SP | DSJ50SP08 | 0.5 | 7.5 | 8 | 2500 | 5000 | 500 | 50 |
| | SP | DSJ50SP09 | 0.5 | 8.5 | 9 | 2500 | 5000 | 500 | 50 |
| 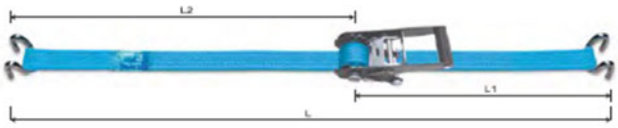 | UP | DSJ10UP04 | 0.5 | 3.5 | 4 | 500 | 1000 | 220 | 25 |
| 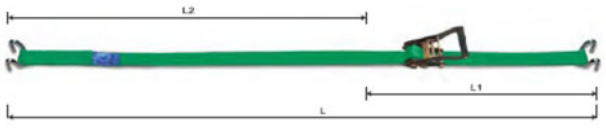 | UP | DSJ20UP04 | 0.5 | 3.5 | 4 | 1000 | 2000 | 220 | 35 |
| 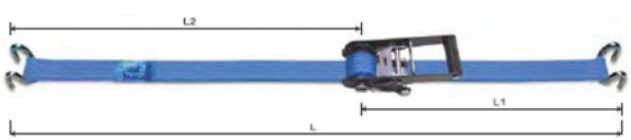 | UP | DSJ40UP08 | 0.5 | 7.5 | 8 | 2000 | 4000 | 500 | 50 |
| | UP | DSJ40UP09 | 0.5 | 8.5 | 9 | 2000 | 4000 | 500 | 50 |
| 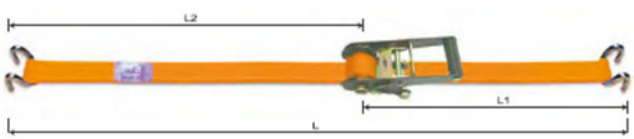 | UP | DSJ50UP08 | 0.5 | 7.5 | 8 | 2500 | 5000 | 500 | 50 |
| | UP | DSJ50UP09 | 0.5 | 8.5 | 9 | 2500 | 5000 | 500 | 50 |

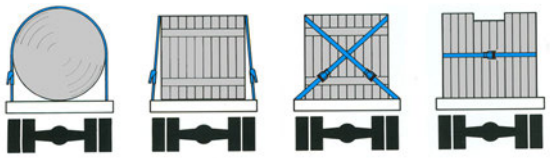

| KANTEN-BESCHERMING<br>TOEBEHOREN | | PROTECTION DE COIN<br>ACCESSOIRES | HOOK PROTECTION<br>ACCESSORIES | KANTENSCHUTZ<br>ZUBEHÖR |
|---|---|---|---|---|
| PES | W:25mm |  | HPX25PES | |
| | W:35mm | | HPX35PES | |
| | W:50mm | | HPX50PES | |
| | W:75mm | | HPX75PES | |
| PVC | W:25mm |  | HPX25PVC | |
| | W:35mm | | HPX35PVC | |
| | W:50mm | | HPX50PVC | |
| | W:75mm | | HPX75PVC | |
| PE | W:50mm | 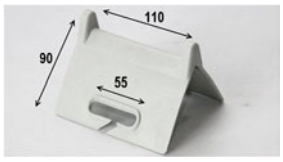 | HKPX | |
| | W:75mm | | | |
| PE | W:50mm |  | HKPX50 | |
| PE | W:75mm |  | HKPX75 | |
| PE | 2400mm | 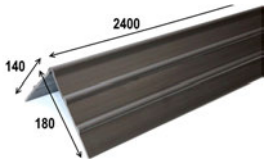 | HKPROFILE240 | |
| Anti-slip 8mm<br>μ > 0,8 | | 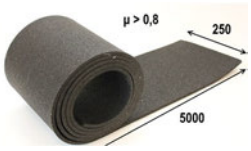 | ASM8R500 | |
| Anti-slip 8mm<br>μ > 0,8 | | 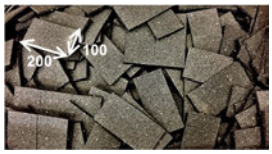 | ASM8P10X20 | |
| STF-Tester | |  | STFT | |

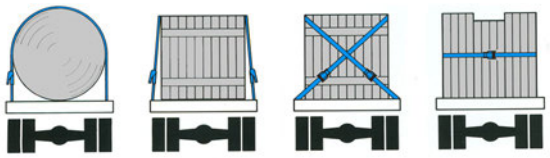

| Sjorband met klemgesp<br>Type DKL<br>L:2.5M-4M-6M | Sangle avec bouckle de pression<br>Type DKL<br>L:2.5M-4M-6M | Lashing strap with Buckle<br>Type DKL<br>L:2.5M-4M-6M | Zurrgurt mit gurtklem<br>Typ DKL<br>L:2.5M-4M-6M |
|---|---|---|---|

| Trekkracht<br>Charge de tendeur<br>Load limit<br>Zugkraft | Type H / Type O | 25a | 25b | 25c | 25d | 25e | |
|---|---|---|---|---|---|---|---|
| | 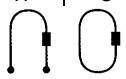 | 250kg | 350kg | 450kg | 600kg | 650kg | 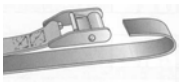 |

| Sjorband ROLL-UP<br>Type DSJRU | Sangle ROLL-UP<br>Type DSJRU | Lashing strap ROLL-UP<br>Type DSJRU | Zurrgurt ROLL-UP<br>Typ DSJRU |
|---|---|---|---|
|  |  |  | |

| Afdeknetten voor containers (PP) met randkoord<br>Type CCN | Filet de benne pour container (PP) Renforce a. corde (contour)<br>Type CCN | Containernet (PP) With rope-edge<br>Type CNN | Containernetz (PP) Mit randleine<br>Typ CNN |  |
|---|---|---|---|---|

(PP=Polypropyleen)

| Art.NR<br>Code Art.<br>Stock No.<br>Art.Nr. | L | B | # | Ø | Kg | |
|---|---|---|---|---|---|---|
| CNN252050 | 2.5m | 2m | 50mm | 3mm | 1.5 | |
| CNN352550 | 3.5m | 2.5m | 50mm | 3mm | 2 | |
| CNN355050 | 3.5m | 5m | 50mm | 3mm | 2.7 | |
| CNN356050 | 3.5m | 6m | 50mm | 3mm | 4.9 | |
| CNN357050 | 3.5m | 7m | 50mm | 3mm | 5.7 | |
| CNN358050 | 3.5m | 8m | 50mm | 3mm | 6.7 | |

| Identificatieplaatje<br>EN12193-3 | Plaquette de marquage<br>EN12193-3 | Identification tag –<br>EN12193-3 | Anhänger<br>EN12193-3 |  |
|---|---|---|---|---|
| 1: EU Norm<br>2: Norm sjorketting<br>3: Ø Ketting<br>4:Voorspankracht<br>5:Sjor capaciteit | 1: EU Norm<br>2: Norm Chaîne d'arrimage<br>3: Ø Chaîne<br>4: Force de précontrainte<br>5: Capacité d'arrimage | 1: EU Norm<br>2: Norm Lashing Chain<br>3: Ø Chain<br>4:Pre-Tension Force<br>5:Lashing Capacity | 1: EU Norm<br>2: Norm Zurrkette<br>3: Ø Kette<br>4:Vorspankraft<br>5:Zurrkraft | |

| | | | | Art.NR<br>Code Art.<br>Stock No.<br>Art.Nr. | |
|---|---|---|---|---|---|
| Set ID TAG ALU 55x40x3+kabel | Set ID TAG ALU 55x40x3+Cable | Set ID TAG ALU 55x40x3+WR | Set IDTAG ALU 55x40x3+Kabel | 220427 | |
| ID-TAG ALU 55x40x3 | ID-TAG ALU 55x40x3 | ID-TAG ALU 55x40x3 | ID-TAG ALU 55x40x3 | 220428 | |
| Kabel Ø4x250+klem | Cable Ø4x250+Ferrule | Wire Rope Ø4x250+Ferrule | Kabel Ø4x200+Pressklem | 299911001 | |

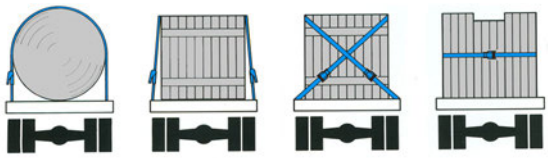

# TERRIER

LIFTING CLAMPS & EQUIPMENT



HIJSTECHNIEK LIFTING TECHNICS

DECORLUX

TECHNIQUE DE LEVAGE HEBETECHNIK

# HIJSKLEMMEN

# QUALITY CLAMPS YOU CAN TRUST




TERRIER LIFTING CLAMPS
MADE IN HOLLAND
QUALITY CLAMPS YOU CAN TRUST

# Terrier Lifting Clamps
# Quality Clamps You Can Trust


Terrier Lifting Clamps & Equipment . . . . 4
5 jaar garantie . . . . 5
Veilig hijsen . . . . 6-7


## Terrier productassortiment


Verticaal hijsen . . . . 8
- TS / TSE / STS . . . . 9
- TSMP / TSEMP / STSMP . . . . 10
- TSU / TSEU / STSU . . . . 11
- TSEU-A . . . . 12
- TS-R / TSE-R / TSU-R / TSEU-R . . . . 13
- TSHP / TSHP-A . . . . 14
- TSHPU . . . . 15
- TCK . . . . 16
- TJP / TJPU . . . . 17

Horizontaal hijsen . . . . 18
- FHX / FHSX . . . . 19
- TDH . . . . 20
- THSK / FHX-V . . . . 21

Non-Marking hijsen . . . . 22
- TNMK / STNMK / TNMK-A . . . . 23
- TNMH . . . . 24
- TBLC . . . . 25

Hijsen van balken . . . . 26
- FBK . . . . 27
- TOBK . . . . 28
- FSV / FSVS / FSVSU . . . . 29

Schroefklemmen . . . . 30
- TSCC / TSCC-W . . . . 31
- TBS . . . . 32

Hijsen van vaten . . . . 33
- TVK / TVKH . . . . 34
- TVSH . . . . 35

Hijsen van pijpen . . . . 36
- TPH / TPH-HD . . . . 37
- TBC / TBC-A . . . . 38
- TTL . . . . 39

Speciaal hijsen . . . . 40
- Extra hard staal . . . . 41
- Beton platen / TRC . . . . 42

Reserveonderdelen . . . . 43

## Terrier Lifting Clamps and Equipment – Quality Clamps You Can Trust

Al meer dan 30 jaar is Terrier een wereldwijd bekend merk dat staat voor hoogwaardige hijsoplossingen en -services. Terrier Lifting Clamps BV heeft zes kernwaarden waar wij voor staan.

### Absolute veiligheid

Absolute veiligheid en veilig hijsen heeft de hoogste prioriteit bij Terrier Lifting Clamps BV. Alle Terrier hijsklemmen zijn getest op 2 keer de toegestane werklast. Terrier hijsklemmen zijn ontworpen met een breekfactor van maar liefst 5 keer de toegestane werklast. Iedere klem heeft voor extra veiligheid een rode signaalkleur op het hijsoog en de hefboom en is voorzien van een testcertificaat. Zorg voor u Terrier klemmen gebruikt dat u onze gebruikshandleiding en de veiligheidsinstructies leest op pagina's 6 en 7 van het gedeelte 'Veilig hijsen'.

### Gegarandeerde krachtige kwaliteit uit Nederland

Terrier kwaliteitshijsklemmen verzekeren goede prestaties en een lange levensduur. Ze zijn onderhoudsvriendelijk en hebben een "heavy duty" gelaste behuizing. Door het lichtgewicht en gestroomlijnde ontwerp zijn ze gemakkelijker te hanteren. Terrier hijsklemmen voldoen aan alle normen en eisen, zoals de Europese norm NEN 13155, de Amerikaanse norm ASME B30.20-2010, de Australische norm 4991 en de Europese machinerichtlijn 2006/42/EC.








### Snelle en flexibele levering en service

Terrier Lifting Clamps BV garandeert een snelle en flexibele levering van standaard hijsproducten, maar ook van speciale hijsproducten. Terrier Lifting Clamps BV biedt een snelle, deskundige en professionele salesservice en aftersales reserveonderdelen service. Daarnaast biedt Terrier Lifting Clamps BV specifieke technische, sales- en of toepassingstrainingen op verzoek en waar nodig.

### Moderne productie, innovatie en technische know-how

Terrier hijsklemmen zijn sterk gericht op innovatie. Wij kunnen u helpen met bijna iedere speciaal gemaakte klem of hijsproduct. De productiefaciliteiten voor de productie van Terrier hijsklemmen zijn uitgerust met zeer moderne machines voor een efficiënte productie op een constant hoogwaardig niveau. De technische know-how heeft het hoogste niveau volgens de laatste normen en eisen in de industrie.

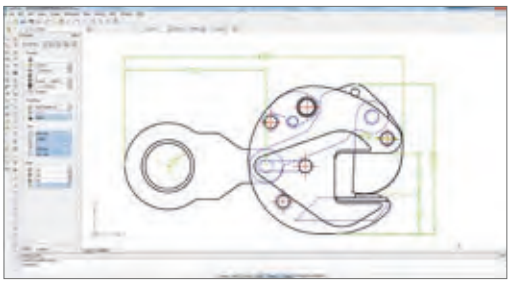





### 30 jaar ervaring wereldwijd

Het team van Terrier Lifting Clamps BV heeft meer dan 30 jaar saleservaring op wereldwijd niveau en heeft een zeer ervaren technisch team. Terrier Lifting Clamps BV vertrouwt op en werkt wereldwijd samen met een sterk en professioneel distributeursnetwerk dat de verwachte kwaliteit en service garandeert. Terrier Lifting Clamps BV is ISO 9001-2015 gecertificeerd.

### Professioneel en persoonlijk contact

Terrier Lifting Clamps BV is trots op haar nuchtere persoonlijke en professionele contact en zorgt ervoor dat u altijd de beste service krijgt. U kunt ons vinden via een Terrier distributeur. Bel ons of ga naar onze website.

## 5 jaar Garantie - Krachtige kwaliteit gegarandeerd

Terrier Lifting Clamps BV biedt een verlengde garantie van 5 jaar op zijn hijsklemmen. De standaard garantieperiode is 1 jaar. Deze verlengde garantie geldt enkel voor de oorspronkelijke eindgebruiker van de hijsklemmen als de klem door een officiële handelaar volgens deze instructies is geïnspecteerd, gecontroleerd en onderhouden. De verlengde garantieperiode van 5 jaar geldt vanaf de datum van aankoop en is onderhevig aan alle in dit document vermelde algemene voorwaarden.

### Product traceren

Het modeltype, serienummer, capaciteit , bek-opening, CE-merk en productiejaar zijn permanent aangebracht op de behuizing. De bedrijfsnaam, het logo en het websiteadres worden aangebracht met een sticker. Voor de VS is een speciale sticker voor de ASME BTH-1-designcategorie en -serviceklasse toegevoegd. Het model-, serie- en bestelnummer, de toegestane werklast (WLL), de bek-opening en testdatum zijn opgenomen in het testcertificaat. Bij ieder product wordt een producthandleiding met inspectieschema geleverd.

### Voorwaarden

Deze verlengde garantie dekt alleen storingen in de hijsklem als gevolg van productiefouten die optreden tijdens normaal gebruik. De garantie dekt geen slijtage aan onderdelen, zoals taatsen, tandsegmenten, spanveren enz. Mocht er binnen deze garantieperiode een storing optreden, dan wordt de hijsklem vervangen of gerepareerd. Controleer de handleiding van het product voor extra informatie over de garantiedekking.

De producent is niet verantwoordelijk voor incidentele schade of schade door verkeerd gebruik van de hijsklem of door inbreuk op deze garantiehandleiding.

### Procedure veiligheidsinspectie

Alle inspecties en reparaties moeten worden opgeschreven in het onderhoudsdiagram/logboek. De klem moet voor gebruik worden geïnspecteerd. Als de klem voor onderhoudsinspectie wordt geretourneerd, moet u altijd het onderhoudsdiagram/-logboek meeleveren.

### Defecte hijsklemmen

Bij opgemerkte slijtage of beschadiging moeten onmiddellijk de volgende stappen worden uitgevoerd:

1. DE HIJSKLEM BUITEN GEBRUIK STELLEN
2. Als er mogelijk sprake is van een storing, noteert u de datum van de storing van de hijsklem. Probeer de oorzaak van de storing te ontdekken, zoals: overbelasting; foutief en/of onzorgvuldig gebruik; het niet navolgen van procedures en maatregelen; het hijsen van afwijkende materialen dan aangegeven op de klem of in de gebruikershandleiding; het aanpassen/wijzigen van de Terrier klem. Deze schadegevallen vallen niet onder de garantie! Om de veiligheid van u en uw collega's te garanderen, bent u verplicht deze procedure te volgen.
3. Breng de hijsklem (met de onderhoudsgeschiedenis) naar de bevoegde Terrier-distributeur.
4. Als de hijsklem door uw distributeur is gereviseerd/gerepareerd, kunt u de klem weer veilig gebruiken. Noteer deze datum in uw onderhoudsgrafiek (producthandleiding).


Lloyd's Register LRQA

CERTIFICATE OF APPROVAL

This is to certify that the Quality Management System of:

Terrier Lifting Clamps B.V.
Ohmweg 11
4338 PV Middelburg
The Netherlands

has been approved by Lloyd's Register Quality Assurance to the following Quality Management System Standard:

ISO 9001 : 2008

The Quality Management System is applicable to:

Production, testing, sales and reconditioning of lifting clamps, in accordance with client specifications.

Approval Certificate No: RQA656980
Original Approval 9 December 200
Current Certificate 1 January 201
Certificate Expiry 31 December 2017

Issued by: Lloyd's Register Nederland B.





TERRIER LIFTING CLAMPS & EQUIPMENT

CERTIFICATE

Renown dealer for :

TERRIER LIFTING CLAMPS

Acknowledged from Terrier Lifting Clamps BV to :

DISTRIBUTOR

Signed : Maykel Polderman / Terrier Lifting Clamps BV Valid till : 01-01-2022

## Absolute veiligheid

Uw veiligheid en veilig hijsen heeft onze hoogste prioriteit.
Zorg dat u onderstaande instructies voor veilig hijsen leest voor u Terrier hijsklemmen gebruikt.
Ieder productblad bevat extra informatie over veilig hijsen en de specifieke toepassing.

- **Lees voor u een klem gebruikt altijd eerst de handleiding voor bedienings-, toepassings-, veiligheids-, onderhouds-, inspectie- en garantie-instructies**
- Hijsklemmen zijn geschikt voor gebruik onder normale atmosferische omstandigheden (-40°C tot +100°C) of waar anders aangegeven
- Belast een klem nooit te zwaar en voorkom schokkende belastingen
- Gebruik tijdens het laden altijd de gehele bekdiepte
- Hijs nooit meer dan één plaat tegelijk
- Houd altijd afstand tijdens het hijsen en laten zakken van de last
- Voorkom situaties waarbij iemand onder de last staat
- Lassen en/of andere aanpassingen aan de klem zijn verboden. Dit kan van invloed zijn op de hardheid en degelijkheid van de klem

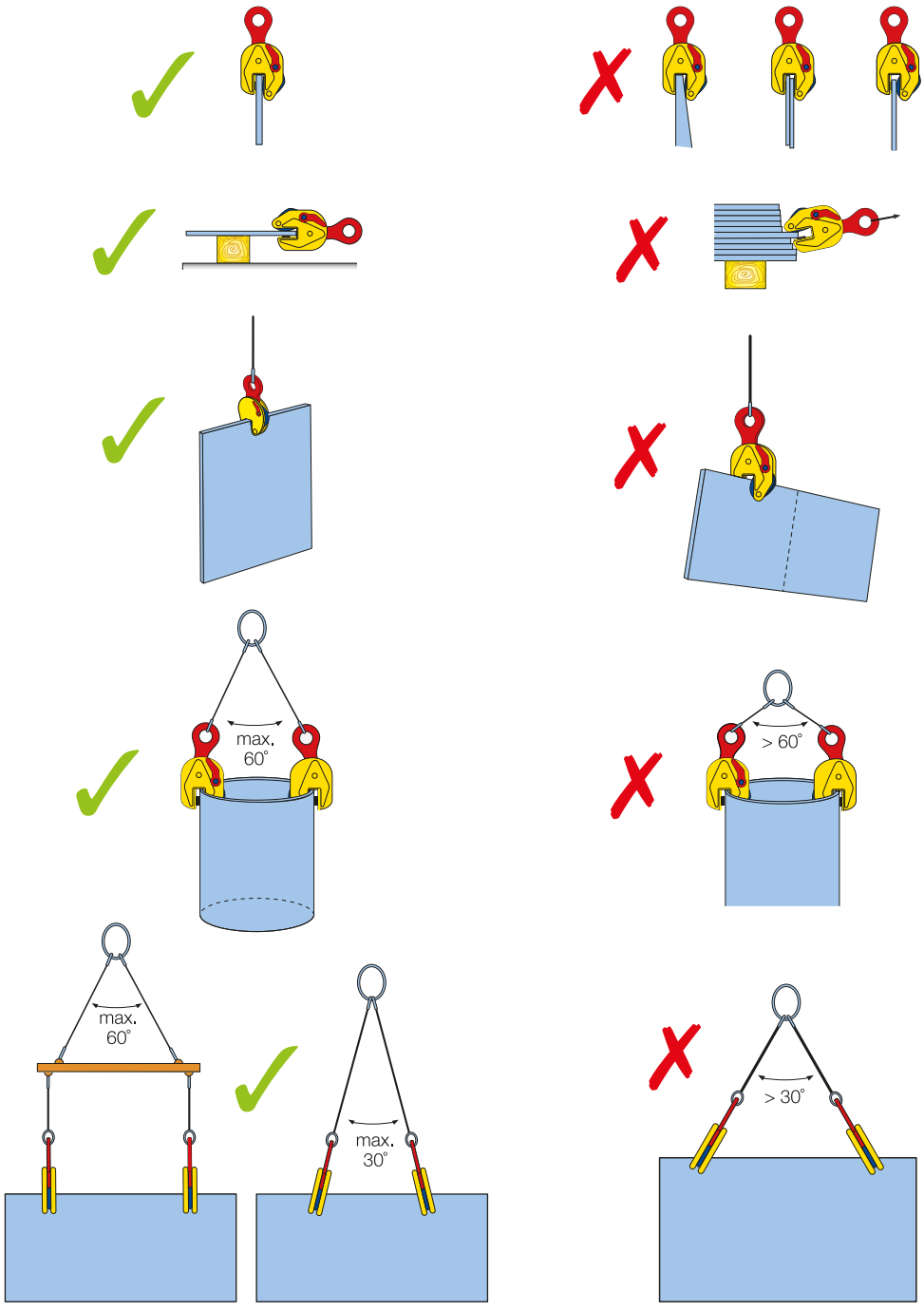


**Veilig verticaal hijsen**




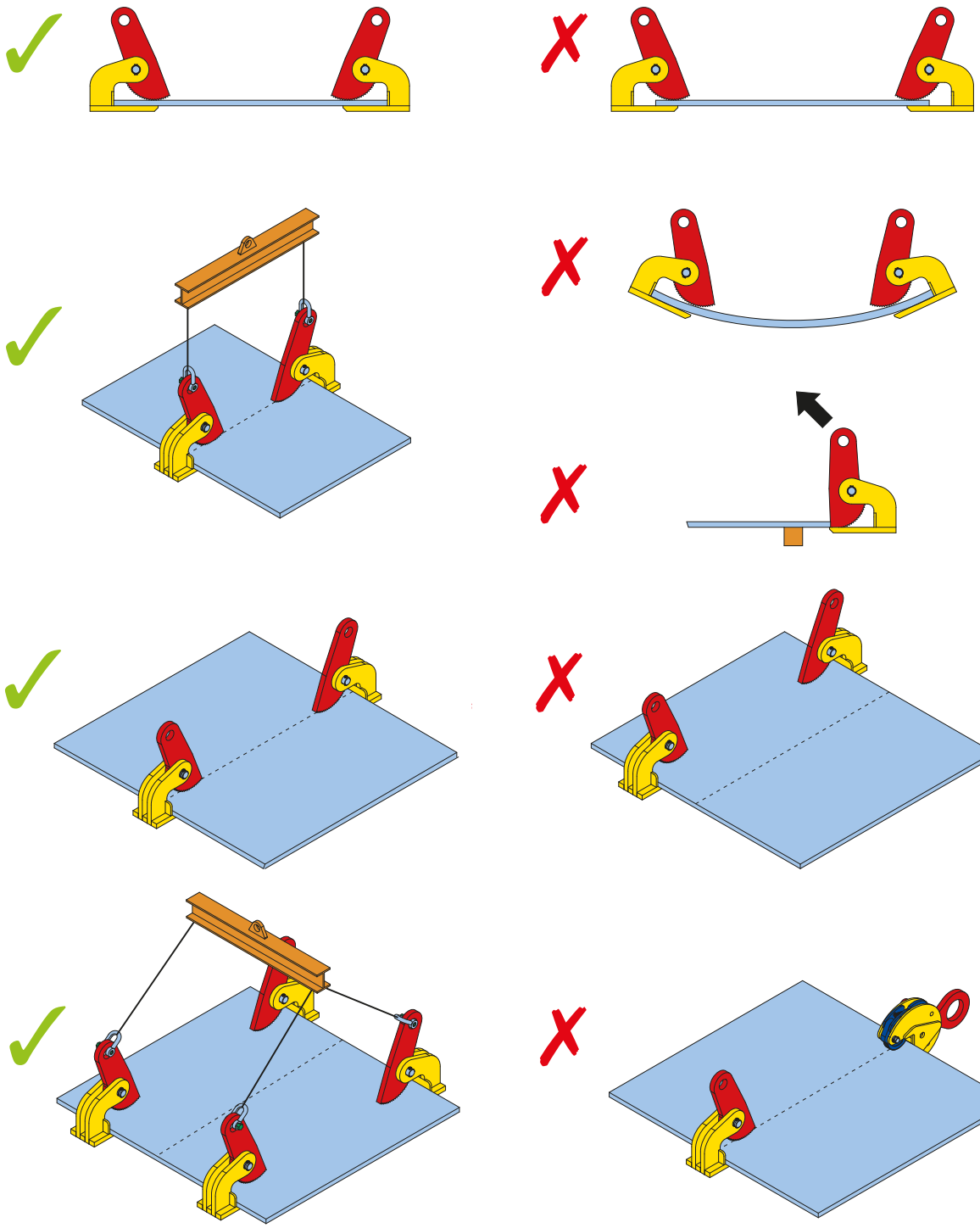

**Veilig horizontaal hijsen**

# VERTICAAL HIJSEN



TERRIER LIFTING CLAMPS
MADE IN HOLLAND
QUALITY CLAMPS YOU CAN TRUST

# TS / TSE / STS

## Lichtgewicht heavy duty verticale hijsklem



### Toepassing:

- Voor verticaal hijsen, transporteren en draaien van alle staalplaten en -constructies
- Bek-openingen verkrijgbaar vanaf: 0 tot 150 mm
- TSE / STS typen worden geleverd met een grotere bek-opening
- Capaciteit 750 - 30000 kg (WLL) (hogere WLL verkrijgbaar op verzoek)
- Min. WLL is 10% van max. WLL

**Let op: Het plaatoppervlak van het materiaal mag een hardheidsniveau hebben van max. HRC 37/345 Hb**

### Kenmerken en voordelen:

- Lichtgewicht ontwerp om gemakkelijk te kunnen hanteren
- Krachtige heavy duty gelaste behuizing
- Altijd uitgerust met een veiligheidsmechanisme zodat de klem niet loslaat als er hijskracht wordt uitgeoefend en wanneer men de last laat zakken
- De klem is vergrendeld in gesloten en open stand
- Onderhoudsvriendelijk, gemakkelijk te verwisselen onderdelen die verkrijgbaar zijn op verzoek

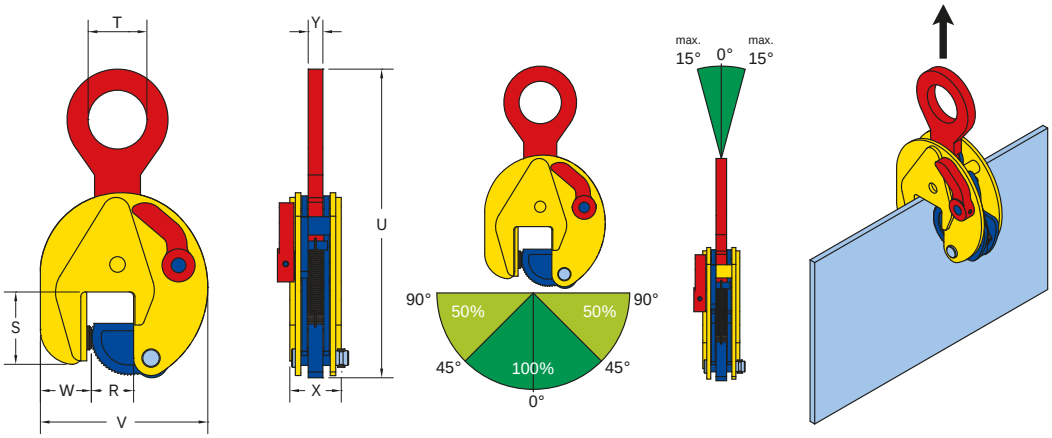


| Artikel Nr. | Model | Capaciteit (kg/st) | Bek-opening (R) (mm) | Afmeting in mm | | | | | | | Gewicht (kg/st) |
|---|---|---|---|---|---|---|---|---|---|---|---|
| | | | | S | T | U | V | W | X | Y | |
| 850000 | 0.75 TS | 750 | 0 - 13 | 47 | 30 | 202 | 100 | 37 | 37 | 10 | 1,7 |
| 850880 | 1 TSE | 1000 | 0 - 25 | 56 | 45 | 263 | 141 | 37 | 47 | 15 | 3,5 |
| 850901 | 2 TSE * | 2000 | 0 - 35 | 78 | 64 | 336 | 183 | 56 | 56 | 16 | 7 |
| 850331 | 3 TSE * | 3000 | 0 - 35 | 78 | 64 | 336 | 183 | 56 | 56 | 16 | 7 |
| 850441 | 4.5 TS | 4500 | 0 - 25 | 85 | 70 | 423 | 203 | 60 | 77 | 20 | 15 |
| 850451 | 4.5 TSE | 4500 | 0 - 45 | 85 | 70 | 425 | 228 | 60 | 78 | 20 | 16 |
| 850301 | 6 TS | 6000 | 0 - 32 | 114 | 75 | 490 | 225 | 78 | 78 | 20 | 19 |
| 851411 | 6 TSE | 6000 | 0 - 50 | 114 | 75 | 490 | 259 | 82 | 78 | 20 | 21 |
| 850401 | 7.5 TS | 7500 | 0 - 40 | 111 | 75 | 530 | 246 | 76 | 82 | 20 | 24 |
| 851501 | 7.5 TSE | 7500 | 0 - 55 | 111 | 75 | 522 | 267 | 70 | 86 | 20 | 26 |
| 851551 | 9 TS | 9000 | 0 - 55 | 111 | 75 | 522 | 267 | 70 | 86 | 20 | 27 |
| 850501 | 12 TS | 12000 | 0 - 52 | 148 | 85 | 617 | 295 | 100 | 94 | 44 | 37 |
| 915000 | 15 TS | 15000 | 0 - 76 | 209 | 86 | 810 | 373 | 136 | 106 | 49 | 70 |
| 917000 | 17 TS | 17000 | 0 - 76 | 209 | 86 | 810 | 373 | 136 | 106 | 49 | 71 |
| 920000 | 20 TS | 20000 | 0 - 80 | 250 | 100 | 933 | 563 | 153 | 140 | 66 | 149 |
| 925000 | 25 TS | 25000 | 5 - 85 | 250 | 100 | 925 | 563 | 148 | 140 | 66 | 149 |
| 930000 | 30 TS | 30000 | 10 - 90 | 250 | 100 | 918 | 568 | 153 | 142 | 66 | 155,5 |
| | | | | | | | | | | | |
| 852200 | 6 STS | 6000 | 40 - 90 | 114 | 75 | 486 | 275 | 70 | 78 | 20 | 21 |
| 854300 | 7.5 STS | 7500 | 50 -100 | 111 | 75 | 524 | 312 | 70 | 86 | 20 | 26,5 |
| 853305 | 9 STS | 9000 | 50 -100 | 111 | 75 | 522 | 312 | 70 | 86 | 20 | 27,5 |
| 852401 | 12 STS | 12000 | 50 -100 | 152 | 85 | 615 | 344 | 100 | 94 | 44 | 41 |
| 921500 | 15 STS | 15000 | 80 -150 | 224 | 86 | 800 | 450 | 136 | 106 | 49 | 76 |
| 922000 | 20 STS | 20000 | 80 -150 | 249 | 100 | 924 | 640 | 153 | 140 | 66 | 160 |
| 922500 | 25 STS | 25000 | 80 -150 | 249 | 100 | 924 | 640 | 153 | 140 | 66 | 160 |
| 923000 | 30 STS | 30000 | 80 -150 | 249 | 100 | 906 | 645 | 156 | 142 | 66 | 165,5 |

* Beschikbaar met afstandbediening

# TSMP / TSEMP / STSMP



## Hijsoog met drievoudig scharnierende gaffel voor flexibel hijsen en groter bereik

**Toepassing:**

- Voor verticaal hijsen, transporteren en draaien van alle staalplaten en -constructies
- Bek-openingen verkrijgbaar vanaf: 0 tot 100 mm
- TSEMP / STSMP typen worden geleverd met een grotere bek-opening
- Capaciteit (WLL) 750 - 9000 kg (hogere WLL verkrijgbaar op verzoek)
- Min. WLL is 10% van max. WLL

**Let op: Het plaatoppervlak van het materiaal mag een hardheidsniveau hebben van max. HRC 37/345 Hb**

**Kenmerken en voordelen:**

- Hijsoog met drievoudig scharnierende gaffel
- Geniet van alle voordelen van de TS-klemmen met extra bereik en hijsflexibiliteit
- Indien de klem is bevestigd aan een vaste draagarm (bijv. evenaar/spreader) blijft deze flexibel en is er geen ketting nodig
- Wegens de lengte van de drievoudig scharnierende gaffel kan de klem verder zakken tussen staande platen of constructies
- Altijd uitgerust met een veiligheidsmechanisme zodat de klem niet loslaat als er hijskracht wordt uitgeoefend en wanneer men de last laat zakken
- De klem is vergrendeld in gesloten en open stand
- Lichtgewicht ontwerp om gemakkelijk te kunnen hanteren
- Krachtige heavy duty gelaste behuizing
- Onderhoudsvriendelijk, gemakkelijk te verwisselen onderdelen die verkrijgbaar zijn op verzoek

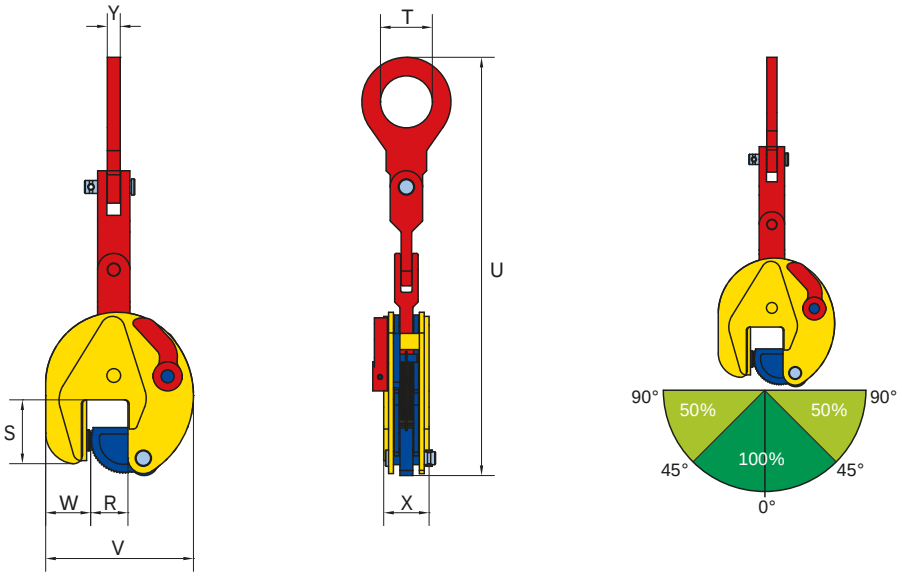


| Artikel Nr. | Model | Capaciteit (kg/st) | Bek-opening (R) (mm) | Afmeting in mm | | | | | | | Gewicht (kg/st) |
|---|---|---|---|---|---|---|---|---|---|---|---|
| | | | | S | T | U | V | W | X | Y | |
| 850010 | 0.75 TSMP | 750 | 0 - 13 | 47 | 30 | 307 | 100 | 37 | 37 | 10 | 2 |
| 850818 | 1 TSEMP | 1000 | 0 - 25 | 56 | 45 | 403 | 141 | 37 | 47 | 15 | 4,5 |
| 850911 | 2 TSEMP* | 2000 | 0 - 35 | 78 | 64 | 516 | 183 | 56 | 56 | 16 | 8 |
| 850221 | 3 TSEMP* | 3000 | 0 - 35 | 78 | 64 | 516 | 183 | 56 | 56 | 16 | 8 |
| 851401 | 4.5 TSEMP | 4500 | 0 - 45 | 85 | 70 | 650 | 228 | 60 | 78 | 20 | 19 |
| 850311 | 6 TSMP | 6000 | 0 - 32 | 114 | 75 | 760 | 225 | 78 | 78 | 20 | 24 |
| 851511 | 6 TSEMP | 6000 | 0 - 50 | 114 | 75 | 760 | 259 | 82 | 78 | 20 | 25,5 |
| 850411 | 7.5 TSMP | 7500 | 0 - 40 | 111 | 75 | 800 | 246 | 76 | 82 | 20 | 29 |
| 851510 | 7.5 TSEMP | 7500 | 0 - 55 | 111 | 75 | 792 | 267 | 70 | 86 | 20 | 30,5 |
| 851515 | 9 TSMP | 9000 | 0 - 55 | 111 | 75 | 792 | 267 | 70 | 86 | 20 | 31 |
| | | | | | | | | | | | |
| 852210 | 6 STSMP | 6000 | 40 - 90 | 114 | 75 | 756 | 275 | 70 | 78 | 20 | 26 |
| 854310 | 7.5 STSMP | 7500 | 50 -100 | 111 | 75 | 695 | 312 | 70 | 86 | 20 | 31,5 |
| 853315 | 9 STSMP | 9000 | 50 -100 | 111 | 75 | 792 | 312 | 70 | 86 | 20 | 32,5 |

* Beschikbaar met afstandbediening

# TSU / TSEU / STSU

## Beste lichtgewicht heavy duty klem voor universeel hijsen



### Toepassing:

- Voor verticaal hijsen, transporteren en draaien van alle staalplaten en -constructies vanuit alle standen
- Bek-openingen verkrijgbaar vanaf: 0 tot 150 mm
- TSEU / STSU typen worden geleverd met een grotere bek-opening
- Capaciteit 750 - 30000 kg (WLL) (hogere WLL verkrijgbaar op verzoek)
- Min. WLL is 10% van max. WLL

**Opmerking: Het plaatoppervlak van het materiaal mag een hardheidsniveau hebben van max. HRC 37/345 Hb**

### Kenmerken en voordelen:

- Met scharnierend hijsoog voor universele hijsflexibiliteit onder verschillende hoeken
- Het scharnierende hijsoog garandeert een krachtige grip in elke stand, zelfs bij 90 graden zijdelingse belasting. Let op een lagere capaciteit bij het hijsen in een hoek van meer dan 45 graden. Bekijk de illustraties voor de WLL reductie hieronder
- Langere platen kunnen gehesen worden zonder gebruik te maken van een spreader als er twee klemmen worden gebruikt met een tweesprong
- Altijd uitgerust met een veiligheidsmechanisme zodat de klem niet loslaat als er hijskracht wordt uitgeoefend en wanneer men de last laat zakken
- De klem is vergrendeld in gesloten en open stand
- Lichtgewicht, onderhoudsvriendelijk, gelaste krachtige behuizing

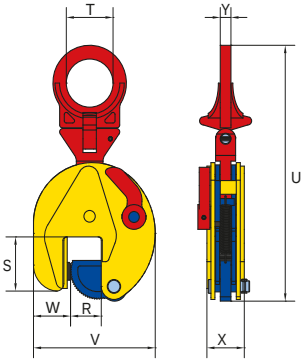


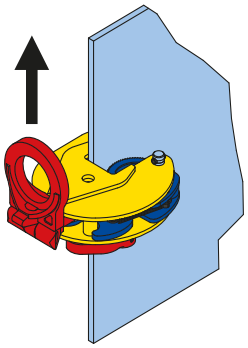

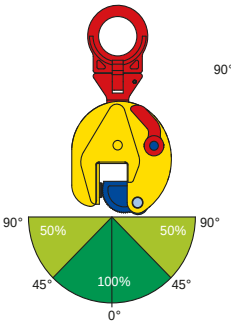


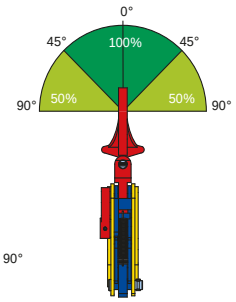




* Afstandbediening

| Artikel Nr. | Model | Capaciteit (kg/st) | Bek-opening (R) (mm) | Afmeting in mm | | | | | | | Gewicht (kg/st) |
|---|---|---|---|---|---|---|---|---|---|---|---|
| | | | | S | T | U | V | W | X | Y | |
| 855000 | 0.75 TSU | 750 | 0 - 13 | 47 | 30 | 203 | 100 | 37 | 37 | 10 | 1,8 |
| 865800 | 1 TSEU | 1000 | 0 - 25 | 56 | 50 | 292 | 141 | 37 | 47 | 15 | 3,8 |
| 855601 | 2 TSEU * | 2000 | 0 - 35 | 78 | 70 | 372 | 183 | 56 | 56 | 16 | 8 |
| 865331 | 3 TSEU * | 3000 | 0 - 35 | 78 | 70 | 372 | 183 | 56 | 56 | 16 | 8 |
| 865441 | 4.5 TSU | 4500 | 0 - 25 | 85 | 70 | 429 | 203 | 60 | 77 | 20 | 16 |
| 865301 | 4,5 TSEU | 4500 | 0 - 45 | 85 | 70 | 431 | 228 | 60 | 78 | 20 | 16,5 |
| 865401 | 6 TSU | 6000 | 0 - 32 | 114 | 78 | 528 | 225 | 78 | 78 | 32 | 22 |
| 865411 | 6 TSEU | 6000 | 0 - 50 | 114 | 78 | 527 | 259 | 82 | 78 | 32 | 24 |
| 865601 | 7.5 TSU | 7500 | 0 - 40 | 111 | 78 | 567 | 246 | 76 | 82 | 32 | 27 |
| 855400 | 7.5 TSEU | 7500 | 0 - 55 | 111 | 78 | 560 | 267 | 70 | 86 | 32 | 28 |
| 855405 | 9 TSU | 9000 | 0 - 55 | 111 | 78 | 560 | 267 | 70 | 86 | 32 | 29 |
| 865901 | 12 TSU | 12000 | 0 - 52 | 148 | 85 | 648 | 295 | 100 | 94 | 48 | 41 |
| 955150 | 15 TSU | 15000 | 0 - 76 | 209 | 85 | 816 | 373 | 136 | 106 | 48 | 73 |
| 955170 | 17 TSU | 17000 | 0 - 76 | 209 | 85 | 816 | 373 | 136 | 106 | 48 | 74 |
| 955200 | 20 TSU | 20000 | 0 - 80 | 250 | 100 | 948 | 563 | 153 | 140 | 71 | 160 |
| 955250 | 25 TSU | 25000 | 5 - 85 | 250 | 100 | 948 | 563 | 148 | 140 | 71 | 160 |
| 955300 | 30 TSU | 30000 | 10 - 90 | 250 | 100 | 944 | 568 | 153 | 142 | 71 | 167 |
| | | | | | | | | | | | |
| 856200 | 6 STSU | 6000 | 40 - 90 | 114 | 78 | 523 | 275 | 70 | 78 | 32 | 24 |
| 856300 | 7.5 STSU | 7500 | 50 -100 | 111 | 78 | 560 | 312 | 70 | 86 | 32 | 30 |
| 855305 | 9 STSU | 9000 | 50 -100 | 111 | 78 | 560 | 312 | 70 | 86 | 32 | 31 |
| 856401 | 12 STSU | 12000 | 50 -100 | 152 | 85 | 644 | 344 | 100 | 94 | 48 | 45 |
| 966150 | 15 STSU | 15000 | 80 -150 | 224 | 85 | 808 | 450 | 136 | 106 | 48 | 78 |
| 966200 | 20 STSU | 20000 | 80 -150 | 249 | 100 | 940 | 640 | 153 | 140 | 71 | 171 |
| 966250 | 25 STSU | 25000 | 80 -150 | 249 | 100 | 940 | 640 | 153 | 140 | 71 | 171 |
| 966300 | 30 STSU | 30000 | 80 -150 | 249 | 100 | 946 | 645 | 156 | 142 | 71 | 176,5 |

* Beschikbaar met afstandbediening

Wijzigingen voorbehouden

# TSEU-A



## Universele heavy duty klem met extra grote bek-opening

**Toepassing:**

- Voor verticaal hijsen, transporteren en draaien van alle staalplaten en -constructies vanuit alle standen
- Verstelbare bek-opening vanaf: 0 tot 95 mm
- 3 verschillende bek-standen. Verstelbaar met stappen van 30 mm
- Capaciteit (WLL) 3000 kg. Min. WLL is 10% van max. WLL

**Opmerking: Het plaatoppervlak van het materiaal mag een hardheidsniveau hebben van max. HRC 37/345 Hb**

**Kenmerken en voordelen:**

- Slechts 1 klem nodig voor verschillende taken
- Ook kan dezelfde klem worden gebruikt als er een grote bek-opening nodig is
- Met scharnierend hijsoog voor universele hijsflexibiliteit onder verschillende hoeken
- Het scharnierende hijsoog garandeert een krachtige grip in elke stand, zelfs bij 90 graden zijdelingse belasting. Let op een lagere capaciteit bij het hijsen in een hoek van meer dan 45 graden. Bekijk de illustraties voor de WLL reductie hieronder
- Langere platen kunnen gehesen worden zonder gebruik te maken van een spreader als er twee klemmen worden gebruikt met een tweesprong
- Standaard met 2 taatsen voor extra klemkracht
- Altijd uitgerust met een veiligheidsmechanisme zodat de klem niet loslaat als er hijskracht wordt uitgeoefend en wanneer men de last laat zakken
- De klem is vergrendeld in gesloten en open stand
- Lichtgewicht ontwerp om gemakkelijk te kunnen hanteren
- Krachtige heavy duty gelaste behuizing
- Onderhoudsvriendelijk, gemakkelijk te verwisselen onderdelen die verkrijgbaar zijn op verzoek

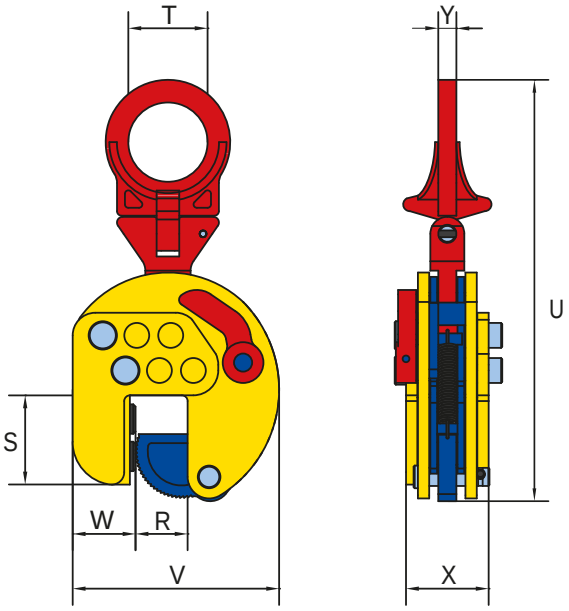





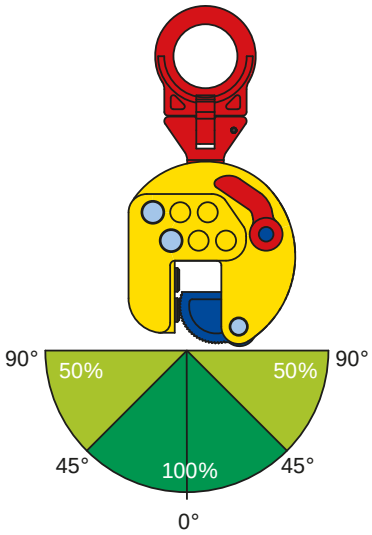


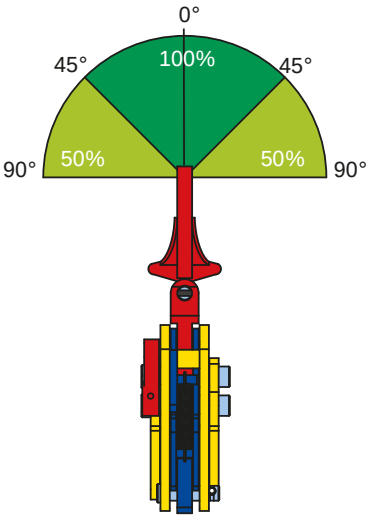


| Artikel Nr. | Model | Capaciteit (kg/st) | Bek-opening (R) (mm) | Afmeting in mm | | | | | | | Gewicht (kg/st) |
|---|---|---|---|---|---|---|---|---|---|---|---|
| | | | | S | T | U | V | W | X | Y | |
| 863300 | 3 TSEU-A | 3000 | 0 - 95 | 79 | 70 | 373 | 183-243 | 51 | 77 | 16 | 10 |

# TS-R / TSE-R / TSU-R / TSEU-R



## Speciaal gemaakt voor hijsen van roestvrij staal

**Toepassing:**

- Voor verticaal hijsen, transporteren en draaien van roestvrij stalen platen en constructies
- Bek-openingen verkrijgbaar vanaf: 0 tot 55 mm
- Capaciteit (WLL) 750 - 7500 kg. Min. WLL is 10% van max. WLL

**Let op: Het plaatoppervlak van het materiaal mag een hardheidsniveau hebben van max. HRC 37/345 Hb**

**Kenmerken en voordelen:**

- Taats en segment zijn gemaakt van roestvrij staal
- Behuizing en hefboom zijn vernikkeld om corrosie door koolstofverontreiniging te voorkomen
- TSU-R / TSEU-R worden geleverd met scharnierend hijsoog voor een universele hijsflexibiliteit onder verschillende hoeken
- TS-R / TSE-R worden geleverd met standaard hijsoog
- Altijd uitgerust met een veiligheidsmechanisme zodat de klem niet loslaat als er hijskracht wordt uitgeoefend en wanneer men de last laat zakken
- De klem is vergrendeld in gesloten en open stand
- Lichtgewicht ontwerp om gemakkelijk te kunnen hanteren
- Krachtige heavy duty gelaste behuizing
- Onderhoudsvriendelijk, gemakkelijk te verwisselen onderdelen die verkrijgbaar zijn op verzoek

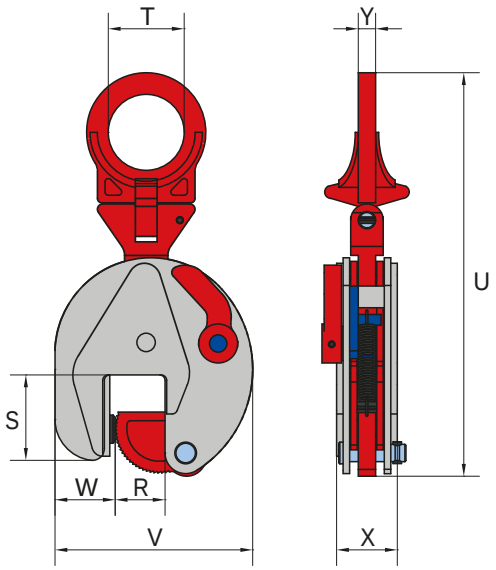


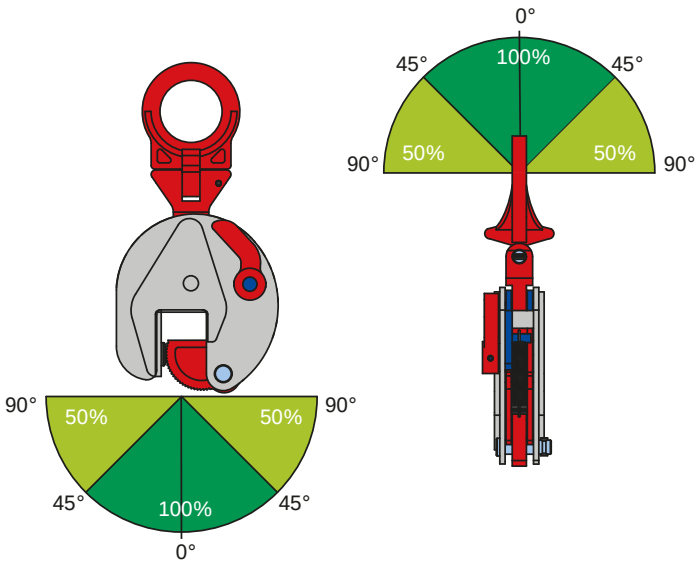


| Artikel Nr. | Model | Capaciteit (kg/st) | Bek-opening (R) (mm) | Afmeting in mm | | | | | | | Gewicht (kg/st) |
|---|---|---|---|---|---|---|---|---|---|---|---|
| | | | | S | T | U | V | W | X | Y | |
| 861075 | 0.75 TS-R | 750 | 0 - 13 | 47 | 30 | 202 | 100 | 37 | 37 | 10 | 1,7 |
| 861100 | 1 TSE-R | 1000 | 0 - 25 | 56 | 45 | 263 | 141 | 37 | 47 | 15 | 3,5 |
| 861200 | 2 TSE-R | 2000 | 0 - 35 | 78 | 64 | 336 | 183 | 56 | 56 | 16 | 7 |
| 861300 | 3 TSE-R | 3000 | 0 - 35 | 78 | 64 | 336 | 183 | 56 | 56 | 16 | 7 |
| 861450 | 4.5 TSE-R | 4500 | 0 - 45 | 85 | 70 | 425 | 228 | 60 | 78 | 20 | 16 |
| 861600 | 6 TSE-R | 6000 | 0 - 50 | 114 | 75 | 490 | 259 | 82 | 78 | 20 | 21 |
| 861750 | 7.5 TSE-R | 7500 | 0 - 55 | 111 | 75 | 522 | 267 | 70 | 86 | 20 | 26 |
| | | | | | | | | | | | |
| 862075 | 0.75 TSU-R | 750 | 0 - 13 | 47 | 30 | 203 | 100 | 37 | 37 | 10 | 1,8 |
| 862100 | 1 TSEU-R | 1000 | 0 - 25 | 56 | 50 | 292 | 141 | 37 | 47 | 15 | 3,8 |
| 862101 | 2 TSU-R | 2000 | 0 - 20 | 78 | 70 | 370 | 165 | 54 | 56 | 16 | 7 |
| 862200 | 2 TSEU-R | 2000 | 0 - 35 | 78 | 70 | 372 | 183 | 56 | 56 | 16 | 8 |
| 862300 | 3 TSEU-R | 3000 | 0 - 35 | 78 | 70 | 372 | 183 | 56 | 56 | 16 | 8 |
| 862450 | 4,5 TSEU-R | 4500 | 0 - 45 | 85 | 70 | 431 | 228 | 60 | 78 | 20 | 16,5 |
| 862600 | 6 TSEU-R | 6000 | 0 - 50 | 114 | 78 | 527 | 259 | 82 | 78 | 32 | 24 |
| 862750 | 7.5 TSEU-R | 7500 | 0 - 55 | 111 | 78 | 560 | 267 | 70 | 86 | 32 | 28 |

# TSHP / TSHP-A



## Lichtgewicht klem met extra grote bek-opening

**Toepassing:**

- Voor verticaal hijsen, hanteren en transporteren van Holland Profile (HP)-scheepsbouwconstructies, staalplaten en -constructies
- Draaibankklem
- TSHP bek-opening van 0 tot 80 mm
- TSHP-A verstelbare bek-opening verkrijgbaar vanaf: 0 tot 155 mm
- TSHP / TSHP-A capaciteit (WLL) 1000 - 1500 kg
- Hogere WLL op verzoek. Min. WLL is 10% van max. WLL
- Hijsen van langere secties moet gebeuren met een spreader

**Opmerking: Het plaatoppervlak van het materiaal mag een hardheidsniveau hebben van max. HRC 37/345 Hb**

**Kenmerken en voordelen:**

- Ook nuttig als 'grote bek-opening' klem
- Standaard met 3 taatsen voor extra klemkracht bij iedere dikte plaat
- Gemakkelijk werkstukken in een draaibank plaatsen door extra kleine W-afmetingen (zie illustratie)
- Altijd uitgerust met een veiligheidsmechanisme zodat de klem niet loslaat als er hijskracht wordt uitgeoefend en wanneer men de last laat zakken
- De klem is vergrendeld in gesloten en open stand
- Lichtgewicht ontwerp om gemakkelijk te kunnen hanteren
- Krachtige heavy duty gelaste behuizing
- Onderhoudsvriendelijk, gemakkelijk te verwisselen onderdelen die verkrijgbaar zijn op verzoek

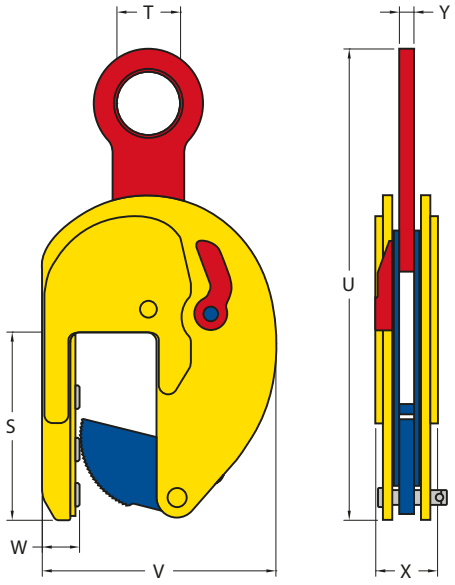





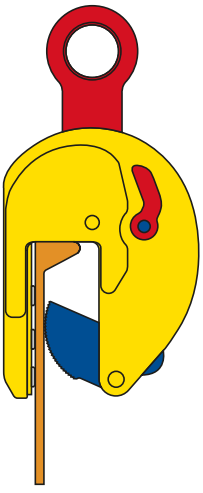

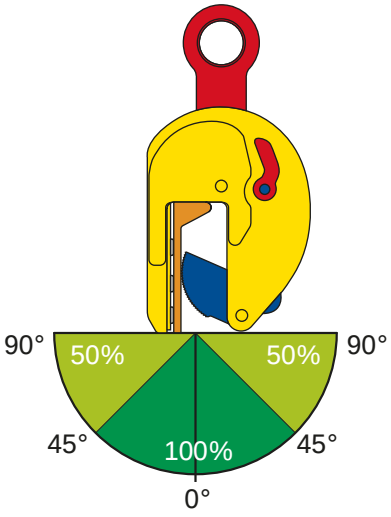


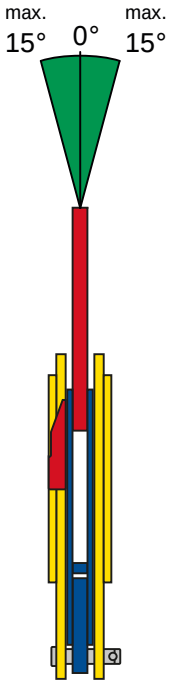


| Artikel Nr. | Model | Capaciteit (kg/st) | Bek-opening (R) (mm) | Afmeting in mm | | | | | | | Gewicht (kg/st) |
|---|---|---|---|---|---|---|---|---|---|---|---|
| | | | | S | T | U | V | W | X | Y | |
| 860110 | 1 TSHP | 1000 | 0 - 80 | 207 | 70 | 520 | 257 | 41 | 68 | 16 | 19 |
| 860111 | 1.5 TSHP | 1500 | 0 - 80 | 207 | 70 | 520 | 257 | 41 | 68 | 16 | 19 |
| 860155 | 1.5 TSHP-A | 1500 | 0 - 155 | 160 | 70 | 523 | 256-333 | 62 | 66 | 16 | 18 |

# TSHPU



## Lichtgewicht Holland Profile-klem (HP) voor universeel hijsen

**Toepassing:**

- Voor verticaal hijsen, hanteren en transporteren van Holland Profile (HP)-scheepsbouwconstructies vanuit alle standen
- TSHPU bek-openingen verkrijgbaar vanaf: 0 tot 45 mm
- TSHPU capaciteit (WLL) 3000 – 5000 kg
- Hogere WLL op verzoek. Min. WLL is 10% van max. WLL
- Hijsen van langere secties moet gebeuren met een spreader

**Opmerking: Het plaatoppervlak van het materiaal mag een hardheidsniveau hebben van max. HRC 37/345 Hb**

**Kenmerken en voordelen:**

- Met scharnierend hijsoog voor universele hijsflexibiliteit onder verschillende hoeken
- Het scharnierende hijsoog garandeert een krachtige grip in elke stand, zelfs bij 90 graden zijdelingse belasting. Let op een lagere capaciteit bij het hijsen in een hoek van meer dan 45 graden. Bekijk de illustraties voor de WLL reductie hieronder
- Standaard met 2 taatsen voor extra klemkracht bij iedere plaatdikte
- Altijd uitgerust met een veiligheidsmechanisme zodat de klem niet loslaat als er hijskracht wordt uitgeoefend en wanneer men de last laat zakken
- De klem is vergrendeld in gesloten en open stand
- Lichtgewicht ontwerp om gemakkelijk te kunnen hanteren
- Krachtige heavy duty gelaste behuizing
- Onderhoudsvriendelijk, gemakkelijk te verwisselen onderdelen die verkrijgbaar zijn op verzoek

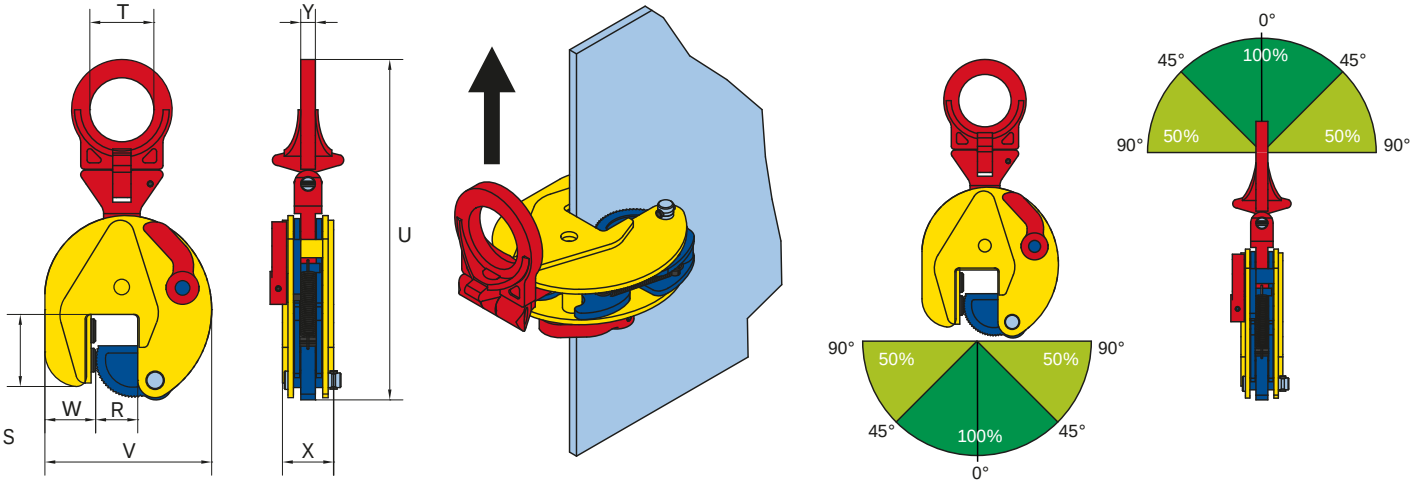


| Artikel Nr. | Model | Capaciteit (kg/st) | Bek-opening (R) (mm) | Afmeting in mm | | | | | | | Gewicht (kg/st) |
|---|---|---|---|---|---|---|---|---|---|---|---|
| | | | | S | T | U | V | W | X | Y | |
| 860300 | 3 TSHPU | 3000 | 0 - 35 | 93 | 70 | 369 | 182 | 58 | 54 | 16 | 8 |
| 860500 | 5 TSHPU | 5000 | 0 - 45 | 110 | 70 | 434 | 228 | 58 | 86 | 20 | 17,3 |

# TCK



## Veilig en gemakkelijk hijsen van vierkante buizenframes

**Toepassing:**

- Voor het verticaal hijsen en transporteren van constructies waarbij een vierkant kokerprofiel wordt gebruikt als draagframe, bijv. mobiele units enz. Als de klem wordt belast, worden de segmenten opzij getrokken en grijpen zich vast tegen de wand van het vierkante kokerprofiel
- Bek-opening verkrijgbaar vanaf: 62 tot 70 mm
- Capaciteit (WLL) 3000 kg Min. WLL is 10% van max. WLL

**Opmerking: Het plaatoppervlak van het materiaal mag een hardheidsniveau hebben van max. HRC 37/345 Hb**

**Kenmerken en voordelen:**

- Vanwege het compacte ontwerp van de klem neemt deze niet meer ruimte in dan de afmetingen van het vierkante kokerprofiel
- Uitgerust met scharnierende hijsoog voor extra hijsflexibiliteit (max 30°)
- Standaard met 2 segmenten voor extra sterke grip
- Een speciale vergrendeling garandeert veilig en gemakkelijk gebruik
- Lichtgewicht ontwerp om gemakkelijk te kunnen hanteren

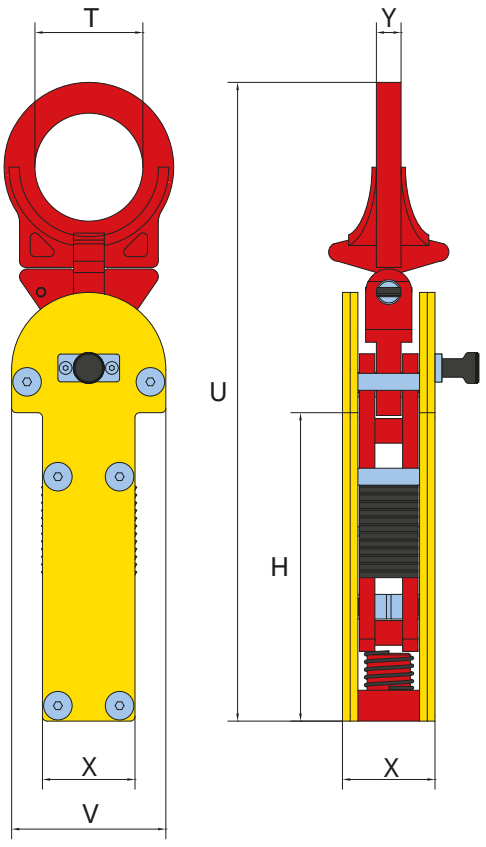


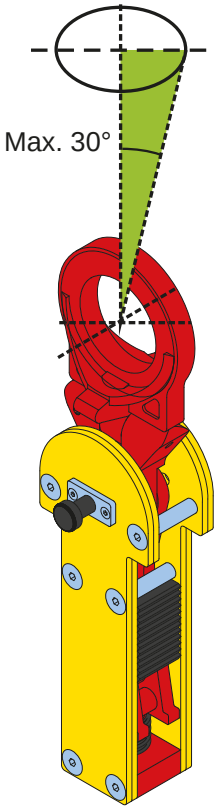


| Artikel Nr. | Model | Capaciteit (kg/st) | Bek-opening (R) (mm) | Afmeting in mm | | | | | | Gewicht (kg/st) |
|---|---|---|---|---|---|---|---|---|---|---|
| | | | | U | X | H | T | Y | V | |
| 810000 | 3 TCK | 3000 | 62 - 70 | 449 | 60 | 200 | 70 | 16 | 100 | 6,9 |

# TJP / TJPU



## Ontworpen voor hijsen van (dun) plaatwerk zonder minimum belasting

**Toepassing:**

- Voor verticaal hijsen en transporteren van (dun) plaatwerk
- Bek-openingen verkrijgbaar vanaf: 0 tot 20 mm
- Capaciteit (WLL) 250 - 1000 kg
- Geen min. WLL

**Opmerking: Het plaatoppervlak van het materiaal mag een hardheidsniveau hebben van max. HRC 37/345 Hb**

**Kenmerken en voordelen:**

- Uitgerust met een speciale beweegbare taats in de klem die zorgt voor extra druk op het materiaal waardoor de kans op slippen van de last wordt geëlimineerd
- TJPU wordt geleverd met een scharnierend hijsoog voor een universele hijsflexibiliteit onder verschillende hoeken
- TJP wordt geleverd met een standaard hijsoog
- Standaard uitgerust met een veiligheidsmechanisme zodat de klem niet loslaat als er hijskracht wordt uitgeoefend en wanneer men de last laat zakken
- De klem is vergrendeld in een gesloten en in een open stand
- Lichtgewicht ontwerp om gemakkelijk te kunnen hanteren
- Krachtige heavy duty gelaste behuizing
- Onderhoudsvriendelijk, gemakkelijk te verwisselen onderdelen die verkrijgbaar zijn op verzoek

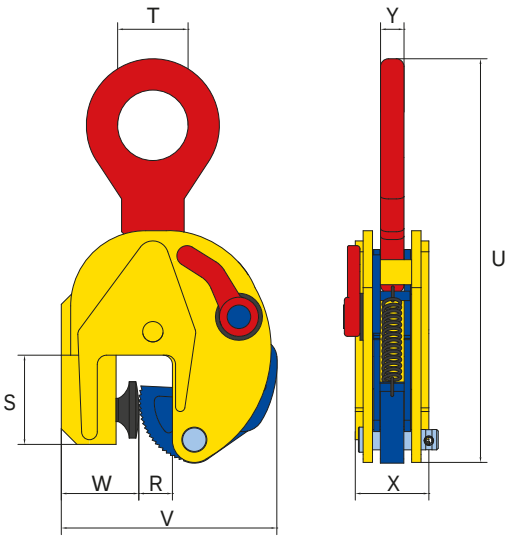





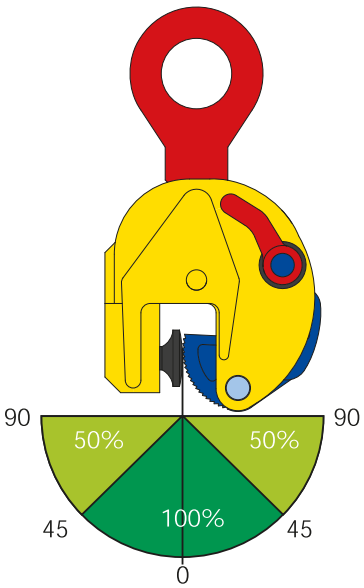


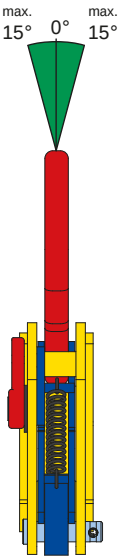


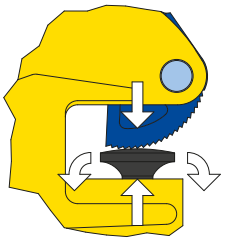

| Artikel Nr. | Model | Capaciteit (kg/st) | Bek-opening (R) (mm) | Afmeting in mm | | | | | | | Gewicht (kg/st) |
|---|---|---|---|---|---|---|---|---|---|---|---|
| | | | | S | T | U | V | W | X | Y | |
| 870700 | 0.25 TJP | 250 | 0 - 13 | 54 | 30 | 202 | 113 | 50 | 37 | 10 | 1,9 |
| 870710 | 0.25 TJPU | 250 | 0 - 13 | 54 | 30 | 202 | 113 | 50 | 37 | 10 | 2 |
| 870800 | 1 TJP | 1000 | 0 - 20 | 56 | 45 | 260 | 137 | 48 | 45 | 15 | 3,8 |

# HORIZONTAAL HIJSEN



TERRIER LIFTING CLAMPS
MADE IN HOLLAND
QUALITY CLAMPS YOU CAN TRUST

# FHX / FHSX

## Lichtgewicht heavy duty klem voor horizontaal hijsen



### Toepassing:

- Voor horizontaal hijsen en transporteren van staalplaten en andere niet-doorbuigende materialen
- Terrier FHX/FHSX hijsklemmen moeten altijd minimaal per 2 stuks of een veelvoud hiervan gebruikt te worden.
- Bek-openingen verkrijgbaar vanaf: 0 tot 150 mm
- FHSX-typen worden geleverd met een grotere bek-opening
- Capaciteit (WLL) 1000 - 25000 kg per paar (hogere WLL verkrijgbaar op verzoek)

### Kenmerken en voordelen:

- Compact ontwerp en hoog hijsvermogen
- Lichtgewicht ontwerp om gemakkelijk te kunnen hanteren
- Krachtige heavy duty gelaste behuizing

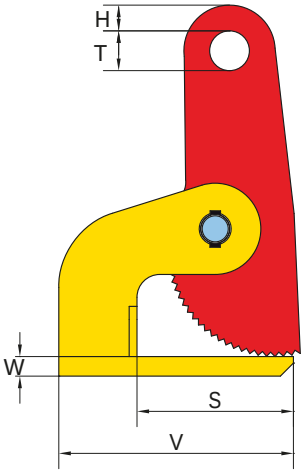


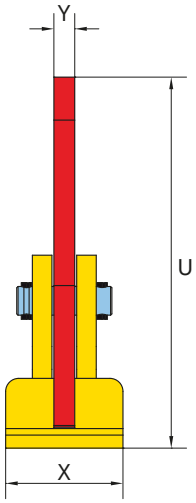


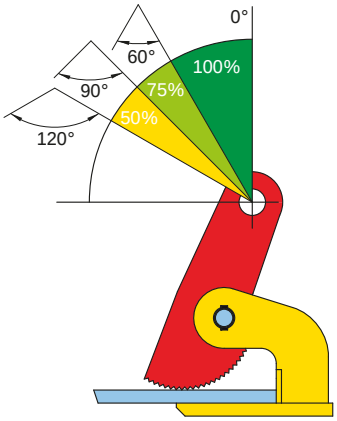


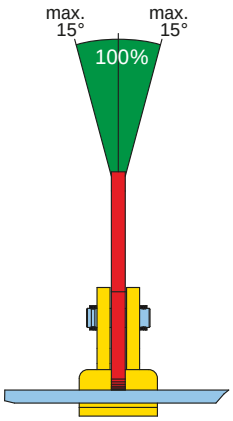


| Artikel Nr. | Model | Capaciteit (kg/pair) | Bek-opening (R) (mm) | Afmeting in mm | | | | | | | | Gewicht (kg/st) |
|---|---|---|---|---|---|---|---|---|---|---|---|---|
| | | | | V | S | W | T | H | X | U | Y | |
| 953100 | 1 FHX | 1000 | 0 - 35 | 140 | 99 | 10 | 25 | 11,5 | 65 | 188 | 15 | 2,6 |
| 953200 | 2 FHX | 2000 | 0 - 60 | 180 | 118 | 15 | 30,5 | 19,5 | 90 | 287 | 16 | 7 |
| 953300 | 3 FHX | 3000 | 0 - 60 | 180 | 118 | 20 | 30,5 | 19,5 | 90 | 291 | 16 | 8 |
| 953400 | 4 FHX | 4000 | 0 - 60 | 220 | 145 | 25 | 30,5 | 19,5 | 105 | 304 | 20 | 13 |
| 953600 | 6 FHX | 6000 | 0 - 60 | 220 | 145 | 25 | 30,5 | 19,5 | 110 | 307 | 20 | 14 |
| 953800 | 8 FHX | 8000 | 0 - 60 | 225 | 135 | 35 | 30,5 | 19,5 | 120 | 336 | 30 | 19 |
| 953010 | 10 FHX | 10000 | 0 - 60 | 225 | 135 | 35 | 30.5 | 19,5 | 120 | 336 | 30 | 19 |
| 953012 | 12 FHX | 12000 | 0 - 60 | 225 | 135 | 35 | 30,5 | 19,5 | 120 | 336 | 30 | 19 |
| 953015 | 15 FHX | 15000 | 0 - 60 | 262 | 147 | 35 | 43 | 21,5 | 160 | 344 | 35 | 30 |
| 953025 | 25 FHX | 25000 | 0 - 60 | 262 | 147 | 40 | 43 | 21,5 | 175 | 349 | 35 | 33 |
| | | | | | | | | | | | | |
| 954200 | 2 FHSX | 2000 | 0 - 100 | 180 | 120 | 15 | 30,5 | 19,5 | 90 | 383 | 15 | 9,2 |
| 954300 | 3 FHSX | 3000 | 0 - 100 | 180 | 120 | 20 | 30,5 | 19,5 | 90 | 387 | 15 | 10 |
| 954400 | 4 FHSX | 4000 | 0 - 100 | 220 | 145 | 25 | 30,5 | 19,5 | 105 | 414 | 20 | 15 |
| 954600 | 6 FHSX | 6000 | 0 - 100 | 220 | 145 | 25 | 30,5 | 19,5 | 120 | 414 | 20 | 16,5 |
| 954800 | 8 FHSX | 8000 | 0 - 100 | 225 | 135 | 35 | 30,5 | 19,5 | 120 | 428 | 30 | 21 |
| 954010 | 10 FHSX | 10000 | 0 - 100 | 225 | 135 | 35 | 30,5 | 19,5 | 120 | 428 | 30 | 22 |
| 954012 | 12 FHSX | 12000 | 0 - 100 | 225 | 135 | 35 | 30,5 | 19,5 | 120 | 428 | 30 | 22 |
| 853820 | 15 FHSX | 15000 | 0 - 150 | 350 | 240 | 35 | 45 | 27,5 | 140 | 665 | 35 | 53 |

# TDH

## Lichtgewicht heavy duty klem voor veilig en gemakkelijk hijsen van doorbuigende platen

### Toepassing:

- Voor horizontaal hijsen en transporteren van stalen platen die doorbuigen als ze worden gehesen
- Terrier TDH hijsklemmen moeten altijd in paren worden gebruikt (of meerdere paren)
- Bek-openingen verkrijgbaar vanaf: 0 tot 50 mm
- Capaciteit (WLL) 1000 - 6000 kg



### Kenmerken en voordelen:

- Compact ontwerp en hoog hijsvermogen
- Lichtgewicht ontwerp om gemakkelijk te kunnen hanteren
- Krachtige heavy duty gelaste behuizing

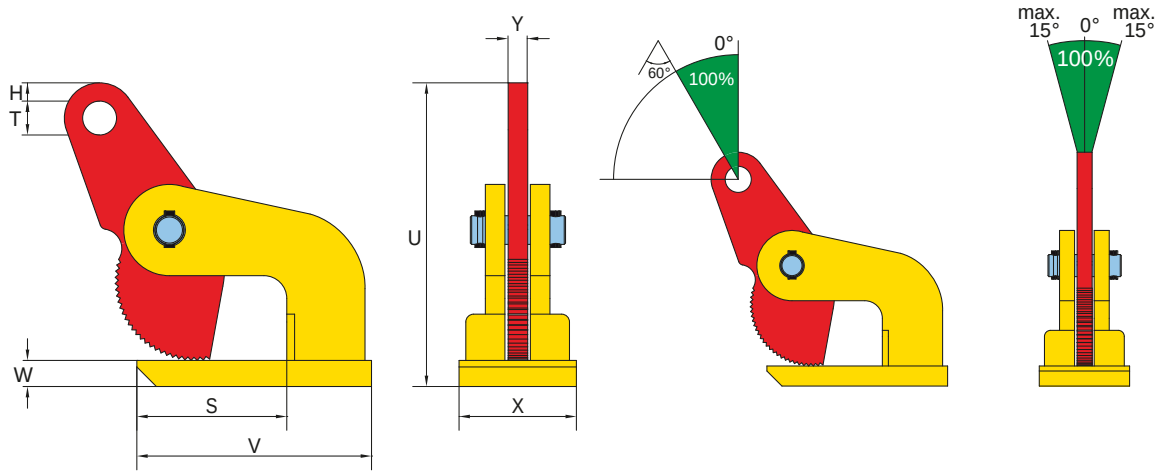


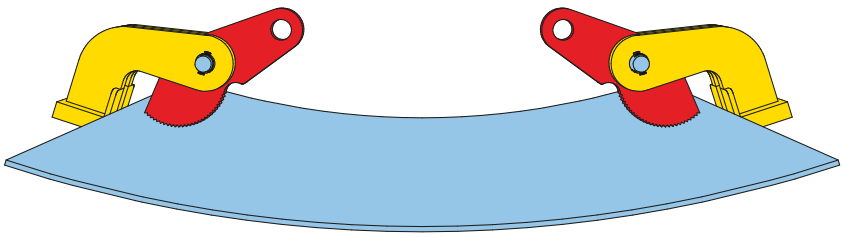

| Artikel Nr. | Model | Capaciteit (kg/pair) | Bek-opening (R) (mm) | Afmeting in mm | | | | | | | | Gewicht (kg/pc) |
|---|---|---|---|---|---|---|---|---|---|---|---|---|
| | | | | V | S | W | T | H | X | U | Y | |
| 970100 | 1 TDH | 1000 | 0 - 15 | 140 | 99 | 10 | 22,5 | 13,5 | 65 | 167 | 15 | 2,5 |
| 970200 | 2 TDH | 2000 | 0 - 35 | 180 | 114 | 20 | 26 | 14 | 90 | 233 | 15 | 8 |
| 970400 | 4 TDH | 4000 | 0 - 50 | 235 | 129 | 30 | 40 | 25 | 130 | 304 | 20 | 18 |
| 970600 | 6 TDH | 6000 | 0 - 50 | 235 | 129 | 30 | 40 | 25 | 130 | 304 | 20 | 18 |

# THSK



## Verstelbare extra grote bek-opening voor hijsen van stapels, pakketten en dikke enkele staalplaten

### Toepassing:

- Voor horizontaal hijsen, hanteren en transporteren van aan elkaar verbonden stapels, pakketten en/of dikke enkele staalplaten
- THSK-hijsklemmen moeten altijd in paren worden gebruikt (of meerdere paren)
- Verstelbare bek biedt vele verschillende openingen, verkrijgbaar van 3 tot 420 mm
- Capaciteit (WLL) 1500 - 9000 kg per paar

### Kenmerken en voordelen:

- Eenvoudig verstelbare bek-opening
- Snel en eenvoudig plaatsen en verwijderen van de klem
- Lichtgewicht ontwerp om gemakkelijk te kunnen hanteren
- Krachtige heavy duty gelaste behuizing

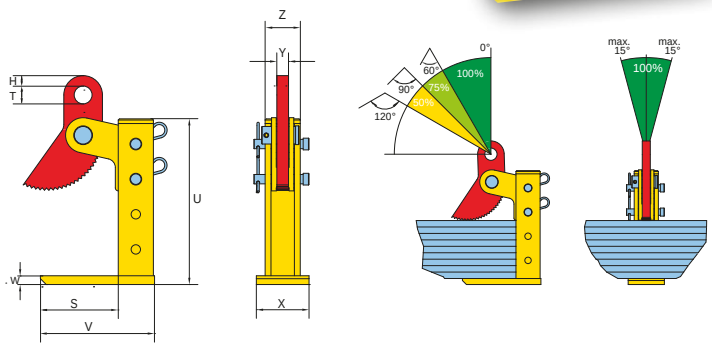


| Artikel Nr. | Model | Capaciteit (kg/pair) | Bek-opening (R) (mm) | Afmeting in mm | | | | | | | | | Gewicht (kg/pc) |
|---|---|---|---|---|---|---|---|---|---|---|---|---|---|
| | | | | V | S | W | T | H | U | X | Z | Y | |
| 815180 | 1.5 THSK/180 | 1500 | 3 -180 | 201 | 135 | 15 | 30,5 | 18 | 289 | 90 | 60 | 20 | 9,5 |
| 815300 | 1.5 THSK/300 | 1500 | 3 -300 | 201 | 135 | 15 | 30,5 | 18 | 409 | 90 | 60 | 20 | 11 |
| 830180 | 3 THSK/180 | 3000 | 3 -180 | 241 | 165 | 20 | 30,5 | 18 | 296 | 105 | 69 | 20 | 13 |
| 830300 | 3 THSK/300 | 3000 | 3 -300 | 241 | 165 | 20 | 30,5 | 18 | 416 | 105 | 69 | 20 | 15 |
| 845180 | 4.5 THSK/180 | 4500 | 3 -180 | 241 | 165 | 20 | 30,5 | 18 | 296 | 105 | 69 | 20 | 13 |
| 845420 | 4.5 THSK/420 | 4500 | 3 -420 | 241 | 165 | 20 | 30,5 | 18 | 536 | 105 | 69 | 20 | 17 |
| 860180 | 6 THSK/180 | 6000 | 3 -180 | 256 | 160 | 25 | 30,5 | 18 | 304 | 120 | 75 | 20 | 18 |
| 860420 | 6 THSK/420 | 6000 | 3 -420 | 256 | 160 | 25 | 30,5 | 18 | 544 | 120 | 75 | 20 | 24 |
| 890180 | 9 THSK/180 | 9000 | 3 -180 | 256 | 160 | 25 | 30,5 | 18 | 304 | 120 | 75 | 20 | 18 |
| 890420 | 9 THSK/420 | 9000 | 3 -420 | 256 | 160 | 25 | 30,5 | 18 | 544 | 120 | 75 | 20 | 24 |

# FHX-V



## Gebruiksvriendelijke horizontaalklem waarbij de torsieveer ervoor zorgt dat de klem bij plaatsing op de last in positie blijft

### Toepassing:

- Voor horizontaal hijsen en transporteren van staalplaten en andere niet-doorbuigende materialen
- Terrier FHX-V-hijsklemmen moeten altijd in paren worden gebruikt (of meerdere paren)
- Bek-openingen verkrijgbaar vanaf: 0 tot 60 mm
- Capaciteit (WLL) 1000 - 6000 kg per paar

### Kenmerken en voordelen:

- Segment met voorgespannen torsieveer voor eenvoudig gebruik door één persoon
- Klem kan worden geplaatst en vastgezet op elke gewenste plek
- Compact en licht ontwerp om gemakkelijk te kunnen hanteren
- Krachtige heavy duty gelaste behuizing

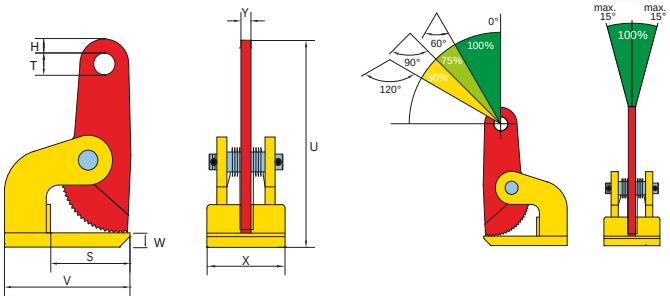


| Artikel Nr. | Model | Capaciteit (kg/pair) | Bek-opening (R) (mm) | Afmeting in mm | | | | | | | | Gewicht (kg/st) |
|---|---|---|---|---|---|---|---|---|---|---|---|---|
| | | | | V | S | W | T | H | U | X | Y | |
| 953101 | 1 FHX-V | 1000 | 0 - 35 | 140 | 99 | 10 | 26,5 | 12 | 188 | 85 | 15 | 3 |
| 953201 | 2 FHX-V | 2000 | 0 - 60 | 180 | 114 | 15 | 30,5 | 19 | 286 | 125 | 16 | 8 |
| 953301 | 3 FHX-V | 3000 | 0 - 60 | 200 | 125 | 20 | 30,5 | 19 | 302 | 140 | 20 | 12,2 |
| 953401 | 4 FHX-V | 4000 | 0 - 60 | 220 | 139 | 30 | 30,5 | 19 | 316 | 165 | 20 | 17 |
| 953601 | 6 FHX-V | 6000 | 0 - 60 | 220 | 139 | 30 | 30,5 | 19 | 316 | 165 | 20 | 17 |

# NON-MARKING HIJSEN



TERRIER LIFTING CLAMPS
MADE IN HOLLAND
QUALITY CLAMPS YOU CAN TRUST

# TNMK / STNMK / TNMK-A



## Verticaal hijsen zonder krassen of beschadigen van het materiaaloppervlak zonder minimum belasting

### Toepassing:

- Voor verticaal hijsen, transporteren en draaien van alle platen en constructies zonder krassen en/of beschadigen van het materiaaloppervlak
- Perfect voor het hijsen van materialen zoals (roestvrij) staal, aluminium, natuursteen, composiet, geverfde materialen, hout, glas, plastic enz.
- Bek-openingen verkrijgbaar vanaf: 0 tot 60 mm
- STNMK typen worden geleverd met een grotere bek-opening: 17 tot 37 mm
- TNMK-A typen worden geleverd met verstelbare extra grote bek-opening: 0 tot 180 mm (A) (verstelbare stappen van 20 mm)
- Capaciteit (WLL) 500 - 3000 kg
- Geen min. WLL

### Kenmerken en voordelen:

- Met 2 speciale synthetische klembekken om beschadigingen te voorkomen
- Uitgerust met hijsoog aan ketting voor meer flexibiliteit
- Altijd uitgerust met een veiligheidsmechanisme zodat de klem niet loslaat als er hijskracht wordt uitgeoefend en wanneer men de last laat zakken
- De klem is vergrendeld in gesloten en open stand
- Lichtgewicht, onderhoudsvriendelijk, heavy duty behuizing

**TNMK**

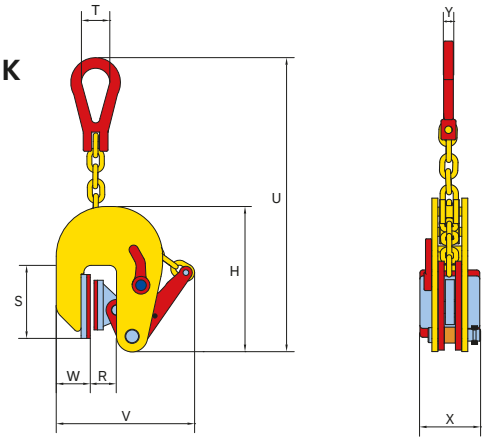


**TNMK-A**

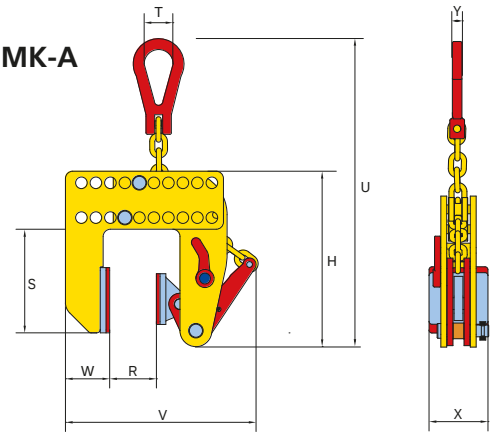


**0.5 t/m 1 TNMK**

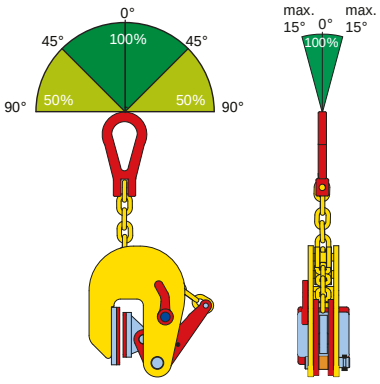


**0.5 TNMK-A**

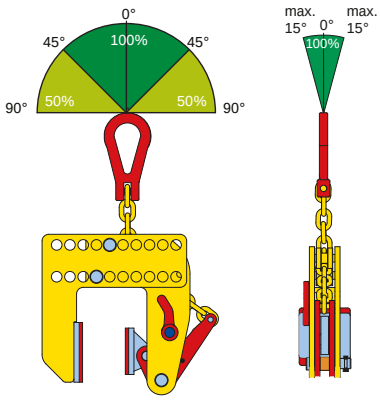


**1.5 t/m 3 TNMK**

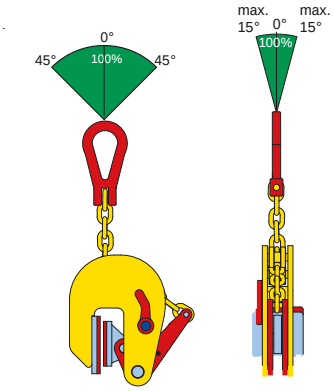


| Artikel Nr. | Model | Capaciteit (kg/st) | Bek-opening (R) (mm) | Afmeting in mm | | | | | | | | Gewicht (kg/st) |
|---|---|---|---|---|---|---|---|---|---|---|---|---|
| | | | | H | S | T | U | V | W | X | Y | |
| 862035 | 0.5 TNMK | 500 | 0 - 20 | 205 | 102 | 40 | 462 | 224 | 48 | 80 | 14 | 6 |
| 862135 | 0.5 STNMK | 500 | 17 - 37 | 205 | 102 | 40 | 462 | 241 | 48 | 80 | 14 | 6 |
| 862005 | 0.5 TNMK-A | 500 | 0 -180 | 242 | 143 | 40 | 410 | 235-395 | 61 | 80 | 14 | 10 |
| 862010 | 1 TNMK | 1000 | 0 - 30 | 232 | 105 | 40 | 470 | 282 | 46 | 80 | 14 | 6,5 |
| 862037 | 1.5 TNMK | 1500 | 0 - 40 | 232 | 105 | 40 | 470 | 282 | 46 | 80 | 14 | 6,5 |
| 862038 | 2 TNMK | 2000 | 0 - 50 | 362 | 124 | 50 | 704 | 408 | 63 | 80 | 18 | 15 |
| 862039 | 3 TNMK | 3000 | 0 - 60 | 362 | 124 | 50 | 704 | 408 | 63 | 80 | 18 | 15,5 |

# TNMH

## Horizontaal hijsen zonder krassen of beschadigen van het materiaaloppervlak



### Toepassing:

- Voor horizontaal hijsen en transporteren van alle niet-doorbuigende platen en constructies zonder krassen en/of beschadigen van het materiaaloppervlak
- Perfect voor het hijsen van materialen zoals (roestvrij) staal, aluminium, natuursteen, composiet, geverfde materialen, hout, glas, plastic enz.
- Terrier TNMH-hijsklemmen moeten altijd in paren worden gebruikt (of meerdere paren)
- Bek-openingen verkrijgbaar vanaf: 0 tot 50 mm
- Capaciteit (WLL) 1000 - 6000 kg per paar

### Kenmerken en voordelen:

- Voet en druksegment zijn bedekt met een speciale hoogwaardige drukbestendige kunststof
- Compact ontwerp en hoog hijsvermogen
- Lichtgewicht ontwerp om gemakkelijk te kunnen hanteren
- Krachtige heavy duty gelaste behuizing

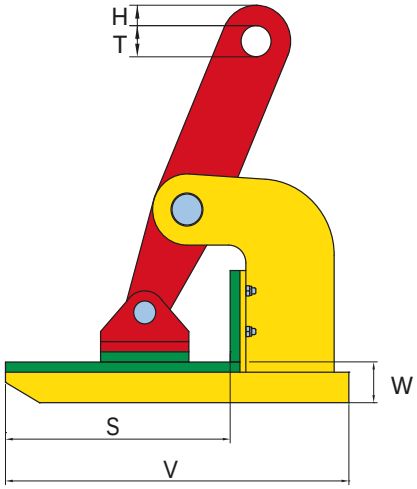


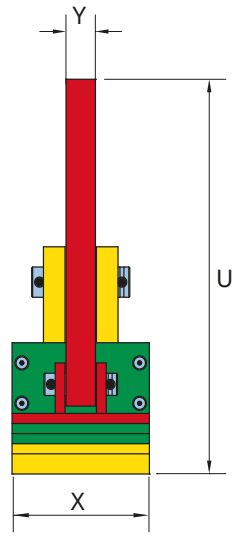


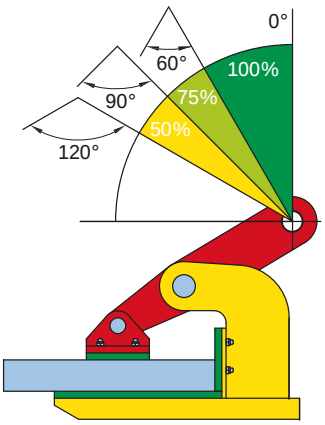


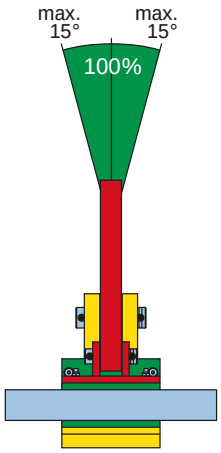


| Artikel Nr. | Model | Capaciteit (kg/pair) | Bek-opening (R) (mm) | Afmeting in mm | | | | | | | | Gewicht (kg/st) |
|---|---|---|---|---|---|---|---|---|---|---|---|---|
| | | | | V | S | W | T | H | U | X | Y | |
| 862810 | 1 TNMH | 1000 | 0 - 25 | 140 | 94 | 15 | 20 | 10 | 155 | 65 | 15 | 2,4 |
| 862820 | 2 TNMH | 2000 | 0 - 45 | 225 | 151 | 23 | 30,5 | 15 | 267 | 90 | 15 | 7,5 |
| 862830 | 3 TNMH | 3000 | 0 - 45 | 225 | 151 | 28 | 30,5 | 15 | 271 | 90 | 15 | 8,3 |
| 862841 | 4 TNMH | 4000 | 0 - 50 | 250 | 161 | 33 | 30,5 | 17,5 | 300 | 115 | 30 | 13 |
| 862861 | 6 TNMH | 6000 | 0 - 50 | 250 | 161 | 33 | 30,5 | 17,5 | 306 | 130 | 30 | 18 |

# TBLC



## Non-Marking verticaal hijsen van materialen met parallelle zijden zoals blokken zonder minimum belasting

### Toepassing:

- Voor verticaal hijsen en transporteren van alle platen, blokken en constructies met parallelle zijden zonder krassen en/of beschadigen van het materiaaloppervlak
- Perfect voor het hijsen van materialen zoals (roestvrij) staal, aluminium, natuursteen, composiet, geverfde materialen, hout, glas, plastic enz.
- De klem is vergrendeld in de open stand. Om te hijsen moet de hendel wegdraaien en deze vasthouden terwijl het hijsoog opwaarts bewogen wordt. Hierdoor sluit de klem. Als de last wordt neergezet, vergrendelt de klem zich automatisch in de open stand.
- Bek-openingen verkrijgbaar vanaf: 30 tot 500 mm
- Capaciteit (WLL) 500 - 3000 kg
- Geen min. WLL

### Kenmerken en voordelen:

- 2 speciale synthetische klembekken om beschadigingen te voorkomen
- Lichtgewicht ontwerp om gemakkelijk te kunnen hanteren
- Krachtige heavy duty gelaste behuizing
- Onderhoudsvriendelijk, gemakkelijk te verwisselen onderdelen die verkrijgbaar zijn op verzoek

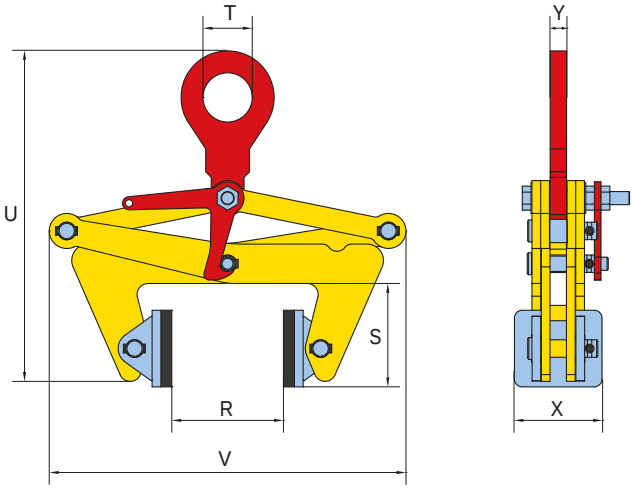


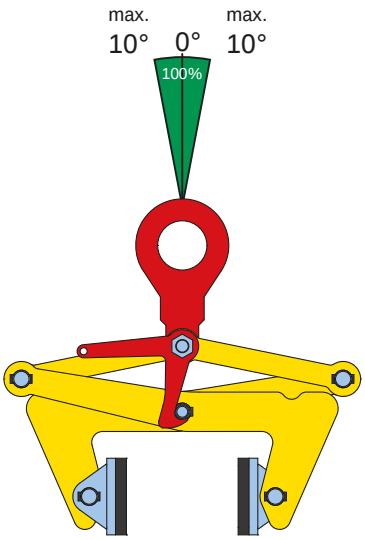


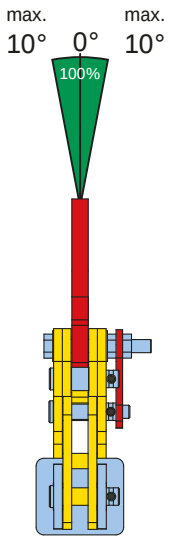


| Artikel Nr. | Model | Capaciteit (kg/st) | Bek-opening (R) (mm) | Afmeting in mm | | | | | | Gewicht (kg/st) |
|---|---|---|---|---|---|---|---|---|---|---|
| | | | | V min-max | U min-max | S | T | X | Y | |
| 801005 | 0.5 TBLC | 500 | 30 - 110 | 270-325 | 305-460 | 95 | 45 | 80 (*70) | 15 | 7 |
| 801010 | 1 TBLC | 1000 | 100 - 230 | 425-530 | 380 -655 | 120 | 45 | 80 (*70) | 15 | 12,3 |
| 801020 | 2 TBLC | 2000 | 220 - 360 | 580 -675 | 410-735 | 140 | 45 | 80 (*70) | 15 | 18 |
| 801030 | 3 TBLC | 3000 | 350 - 500 | 725-835 | 530-900 | 178 | 64 | 100 (*90) | 16 | 33 |

# BALKEN HIJSEN



TERRIER LIFTING CLAMPS
MADE IN HOLLAND
QUALITY CLAMPS YOU CAN TRUST

# FBK



## Speciale hijsklem voor hanteren en verticaal in-positie hijsen van balken

**Toepassing:**

- Voor verticaal hijsen, transporteren en stapelen van stalen (H) balken, profielen en constructies waarbij de last perfect in-positie moet blijven
- In het bijzonder aanbevolen voor transporteren en stapelen van stalen (H) balken (bijv. tijdens het zagen van stalen balken, stapelen van stalen balken en bouwen van staalconstructies)
- Bek-openingen verkrijgbaar vanaf: 0 tot 25 mm
- Capaciteit (WLL) 1000 - 3000 kg. Min. WLL is 10% van max. WLL

**Opmerking: Het plaatoppervlak van het materiaal mag een hardheidsniveau hebben van max. HRC 37/345 Hb**

**Kenmerken en voordelen:**

- Speciale hijsoogvorm die het zwaartepunt van de balk of last direct onder het hijsoog plaatst
- Tijdens het hijsen blijft de balk in evenwicht en blijven de flenzen verticaal, zodat de balk gemakkelijk kan worden gestapeld of geplaatst
- Altijd uitgerust met een veiligheidsmechanisme zodat de klem niet loslaat als er hijskracht wordt uitgeoefend en wanneer men de last laat zakken
- De klem is vergrendeld in gesloten en open stand
- Lichtgewicht ontwerp om gemakkelijk te kunnen hanteren
- Krachtige heavy duty gelaste behuizing
- Onderhoudsvriendelijk, gemakkelijk te verwisselen onderdelen die verkrijgbaar zijn op verzoek

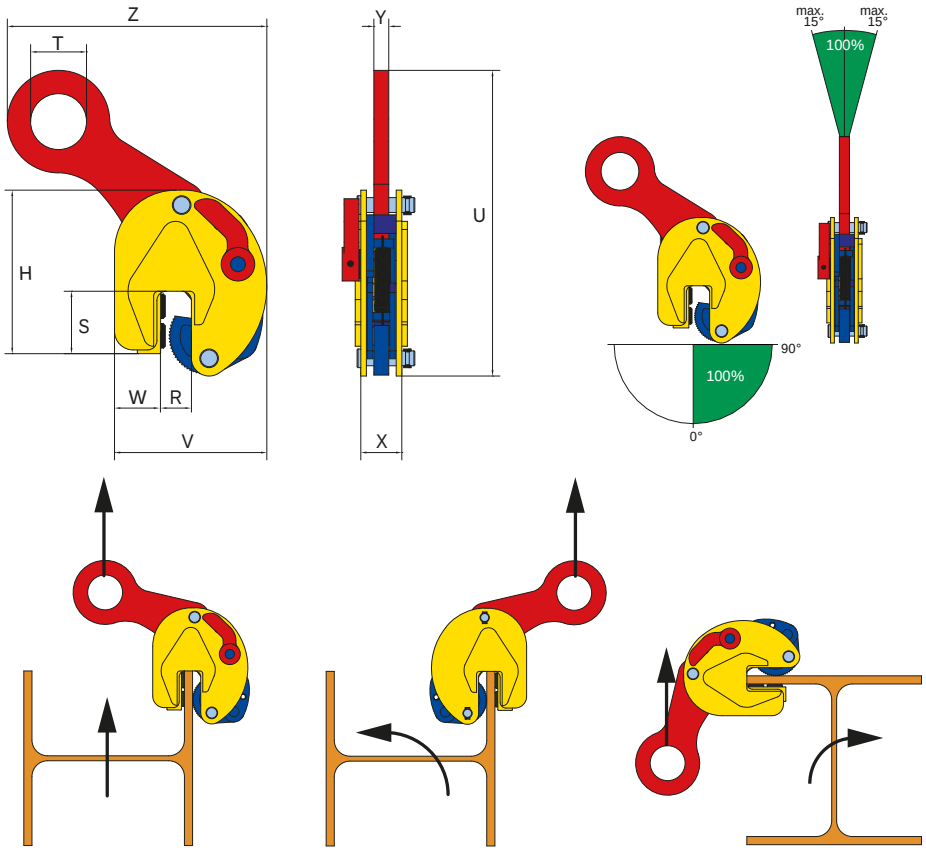


| Artikel Nr. | Model | Capaciteit (kg/st) | Bek-opening (R) (mm) | Afmeting in mm | | | | | | | | | Gewicht (kg/st) |
|---|---|---|---|---|---|---|---|---|---|---|---|---|---|
| | | | | V | W | S | H | T | Z | X | U | Y | |
| 851010 | 1 FBK | 1000 | 0 - 15 | 136 | 43 | 45 | 154 | 35 | 200 | 47 | 225 | 15 | 3 |
| 851000 | 1.5 FBK | 1500 | 0 - 20 | 170 | 56 | 67 | 210 | 60 | 312 | 56 | 374 | 16 | 7 |
| 851100 | 3 FBK | 3000 | 0 - 25 | 208 | 58 | 66 | 252 | 70 | 380 | 77 | 410 | 20 | 15 |

# TOBK

## Eenvoudig horizontaal hijsen van H-balken



### Toepassing:

- Voor horizontaal hijsen, transporteren en stapelen van stalen (H) balken, profielen en constructies
- Bek-openingen verkrijgbaar vanaf: 3 tot 20 mm
- Capaciteit (WLL) 2000 kg

### Kenmerken en voordelen:

- Het speciale ontwerp maakt het mogelijk stalen (H) balken te hijsen op de flens en op de bovenste uiteinden van de balk
- Altijd uitgerust met een veiligheidsmechanisme zodat de klem niet loslaat als er hijskracht wordt uitgeoefend en wanneer men de last laat zakken
- De klem is vergrendeld in gesloten en open stand
- Lichtgewicht ontwerp om gemakkelijk te kunnen hanteren
- Krachtige heavy duty gelaste behuizing
- Onderhoudsvriendelijk, gemakkelijk te verwisselen onderdelen die verkrijgbaar zijn op verzoek

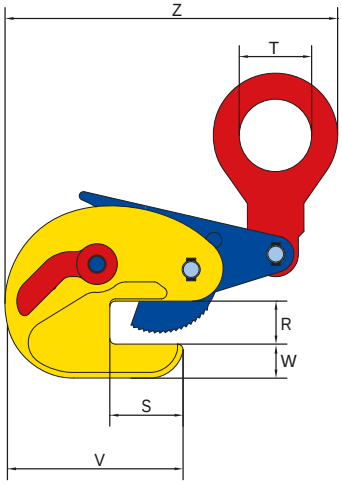


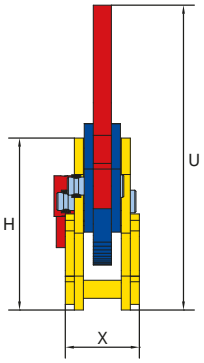


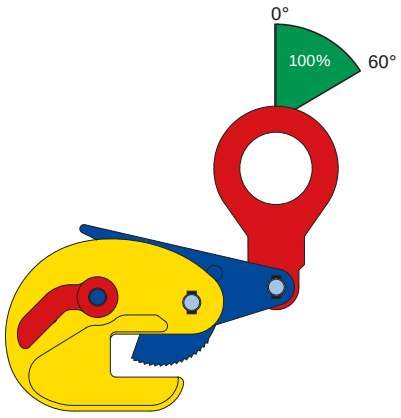


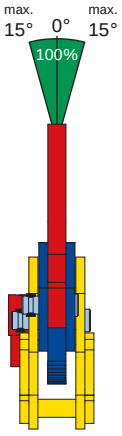


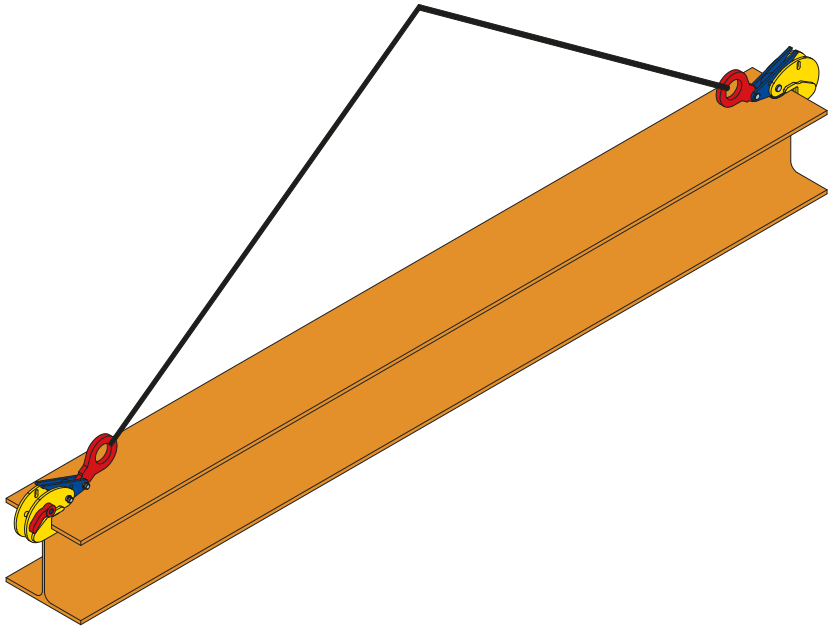

| Artikel Nr. | Model | Capaciteit (kg/st) | Bek-opening (R) (mm) | Afmeting in mm | | | | | | | | | Gewicht (kg/st) |
|---|---|---|---|---|---|---|---|---|---|---|---|---|---|
| | | | | V | W | S | H | T | Z | X | U | Y | |
| 851001 | 2 TOBK | 2000 | 3 - 20 | 192 | 30 | 64 | 154 | 64 | 285 | 65 | 310 | 15 | 6,8 |

# FSV / FSVS / FSVSU

## Multifunctionele balkenklem



### Toepassing:

- Voor het horizontaal hijsen en transporteren van stalen (H) balken, profielen en constructies
- Kan ook gebruikt worden als (tijdelijk) hijspunt
- FSV bek-openingen verkrijgbaar vanaf: 75 tot 450 mm
- FSVS / FSVSU typen worden geleverd met een grotere bek-opening: 75 tot 560 mm
- FSV capaciteit (WLL) 1000 - 10000 kg (Hogere WLL op verzoek)
- FSVS / FSVSU capaciteit tot 5000 kg



### Kenmerken en voordelen:

- Speciaal ontwerp maakt het mogelijk stalen (H) balken en constructies te hijsen
- Gelijktijdig openen en sluiten van beide bekhelften voor eenvoudige en snelle bevestiging
- Gelaste klembekken voor betere positionering en minder schade aan de last
- FSVSU typen worden geleverd met verstevigde behuizing en scharnierend universeel hijsoog
- Lichtgewicht, onderhoudsvriendelijk, heavy duty behuizing

**FSV**

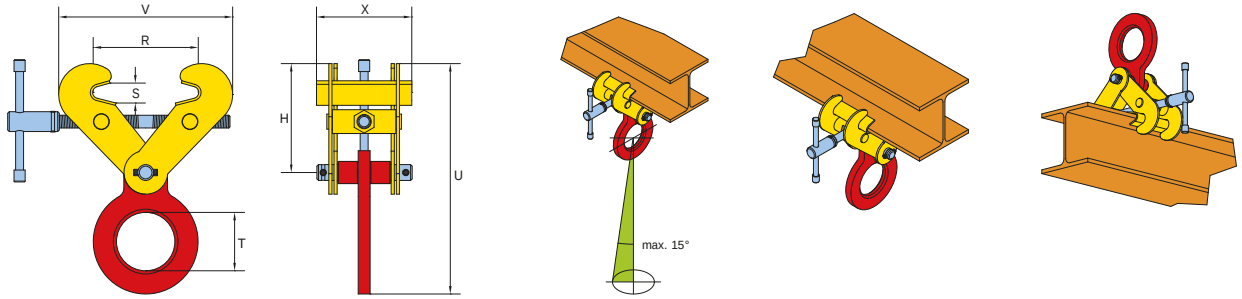


**FSVSU**

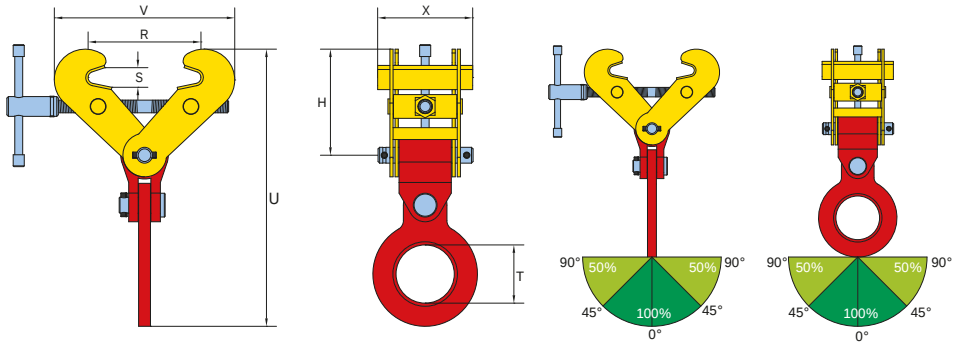


| Artikel Nr. | Model | Capaciteit (kg/st) | Bek-opening (R) (mm) | Afmeting in mm | | | | | | Gewicht (kg/st) |
|---|---|---|---|---|---|---|---|---|---|---|
| | | | | S | T | V-max | U-max | H | X | |
| 851400 | 1 FSV | 1000 | 75 - 190 | 30 | 73,5 | 357 | 345 | 113-192 | 120 | 5 |
| 851500 | 2 FSV | 2000 | 75 - 190 | 30 | 73,5 | 357 | 345 | 113-192 | 120 | 5 |
| 851600 | 3 FSV | 3000 | 75 - 190 | 30 | 73,5 | 357 | 345 | 113-192 | 120 | 5 |
| 851700 | 4 FSV | 4000 | 150 - 300 | 40 | 80 | 450 | 422 | 185-240 | 180 | 15 |
| 851800 | 5 FSV | 5000 | 150 - 300 | 40 | 80 | 450 | 422 | 185-240 | 180 | 15 |
| 851110 | 10 FSV | 10000 | 350 - 450 | 95 | 88 | 695 | 653 | 400-447 | 200 | 50 |
| | | | | | | | | | | |
| 962000 | 2 FSVS | 2000 | 75 - 420 | 30 | 73,5 | 540 | 428 | 114-275 | 120 | 7 |
| 963000 | 3 FSVS | 3000 | 75 - 420 | 30 | 73,5 | 540 | 428 | 114-275 | 120 | 7 |
| 964000 | 4 FSVS | 4000 | 150 - 560 | 40 | 80 | 708 | 545 | 173-362 | 180 | 18 |
| 965000 | 5 FSVS | 5000 | 150 - 560 | 40 | 80 | 708 | 545 | 173-362 | 180 | 19,5 |
| | | | | | | | | | | |
| 956300 | 3 FSVSU | 3000 | 75 - 420 | 30 | 73,5 | 540 | 486 | 114-275 | 120 | 8 |
| 956400 | 4 FSVSU | 4000 | 150 - 560 | 40 | 80 | 708 | 613 | 173-362 | 180 | 21 |
| 956500 | 5 FSVSU | 5000 | 150 - 560 | 40 | 80 | 708 | 622 | 173-362 | 180 | 22 |

# SCHROEFKLEMMEN



TERRIER LIFTING CLAMPS
MADE IN HOLLAND
QUALITY CLAMPS YOU CAN TRUST

# TSCC / TSCC-W



## Multifunctionele schroefklem

### Toepassing:

- Voor verticaal en horizontaal hijsen en transporteren van vele verschillende stalen constructies
- Kan ook ondersteboven worden bevestigd en worden gebruikt als (tijdelijk) hijspunt
- Bek-openingen verkrijgbaar vanaf: 0 tot 100 mm
- TSCC-W typen worden geleverd met een grotere bek-opening: 25 tot 100 mm
- Capaciteit (WLL) 500 - 6000 kg
- Geen min. WLL

### Kenmerken en voordelen:

- Een speciaal universeel ontwerp garandeert een multifunctionele toepassing bij het hijsen van stalen structuren
- Uitgerust met een beweegbaar segment op de schroefdraadspindel, wat voor een extra stevige klemkracht zorgt op het werkstuk
- Lichtgewicht ontwerp om gemakkelijk te kunnen hanteren
- Krachtige kwaliteit heavy duty gesmede behuizing
- Gesmede onderdelen, waar nodig
- Onderhoudsvriendelijk, gemakkelijk te verwisselen onderdelen die verkrijgbaar zijn op verzoek

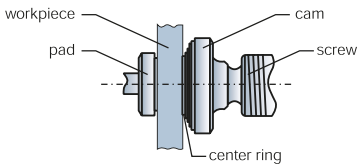


When under the initial tightening force

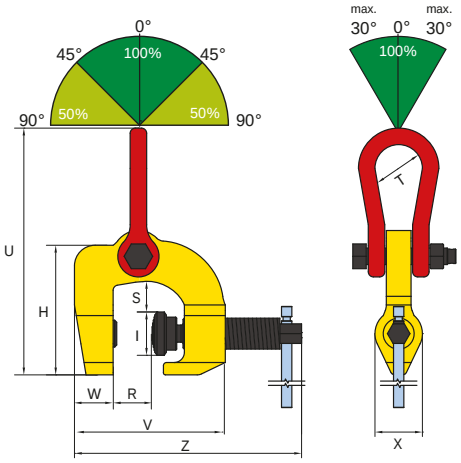





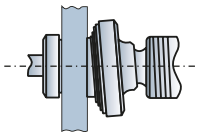

When under load

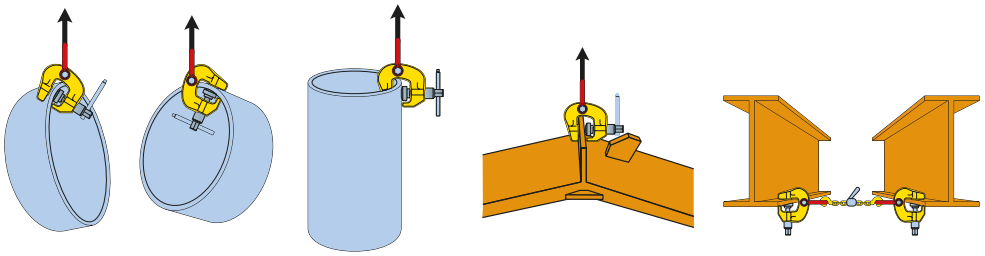

| Artikel Nr. | Model | Capaciteit (kg/st) | Bek-opening (R) (mm) | Afmeting in mm | | | | | | | | | Gewicht (kg/st) |
|---|---|---|---|---|---|---|---|---|---|---|---|---|---|
| | | | | S | I | W | V | Z | U | H | T | X | |
| 900500 | 0.5 TSCC | 500 | 0 - 35 | 18 | 27,5 | 26 | 108 | 158 | 211 | 82 | 25 | 27 | 1 |
| 901000 | 1 TSCC | 1000 | 0 - 40 | 29 | 42 | 40 | 150 | 220 | 232 | 140 | 46 | 46 | 3,6 |
| 901500 | 1.5 TSCC | 1500 | 0 - 40 | 29 | 42 | 40 | 150 | 220 | 232 | 140 | 46 | 46 | 3,8 |
| 903000 | 3 TSCC | 3000 | 0 - 60 | 38 | 50 | 46 | 190 | 280 | 278 | 184 | 50 | 60 | 7,8 |
| 906000 | 6 TSCC | 6000 | 0-100 | 60 | 63 | 70 | 296 | 446 | 390 | 249 | 100 | 75 | 22 |
| 862711 | 1 TSCC-W | 1000 | 50 - 100 | 88 | 42 | 50 | 225 | 258 | 273 | 190 | 45 | 46 | 6,3 |
| 862731 | 3 TSCC-W | 3000 | 25 - 75 | 76 | 49 | 60 | 215 | 250 | 291 | 191 | 50 | 54 | 7,8 |

# TBS



## Multifunctionele schroefklem voor HP-profielen

**Toepassing:**

- Voor gebruik als een (tijdelijk) hijspunt in ruimten versterkt met HP-(bulb)profielen, zoals scheepsbouwsecties en scheepsmachinekamers
- Op het moment van aanbrengen van een last wordt de klem automatisch vastgeklemd wanneer de spindel dichtgedraaid is
- Gebruik op HP-100 tot HP-240 (bulb)profielen
- Capaciteit (WLL) 1500 - 3000 kg

**Kenmerken en voordelen:**

- Uitgerust met een schroefdraadspindel om gemakkelijk te bevestigen, wat voor een krachtige klemkracht zorgt op het werkstuk
- Lichtgewicht ontwerp om gemakkelijk te kunnen hanteren
- Krachtige kwaliteit heavy duty behuizing
- Onderhoudsvriendelijk, gemakkelijk te verwisselen onderdelen die verkrijgbaar zijn op verzoek

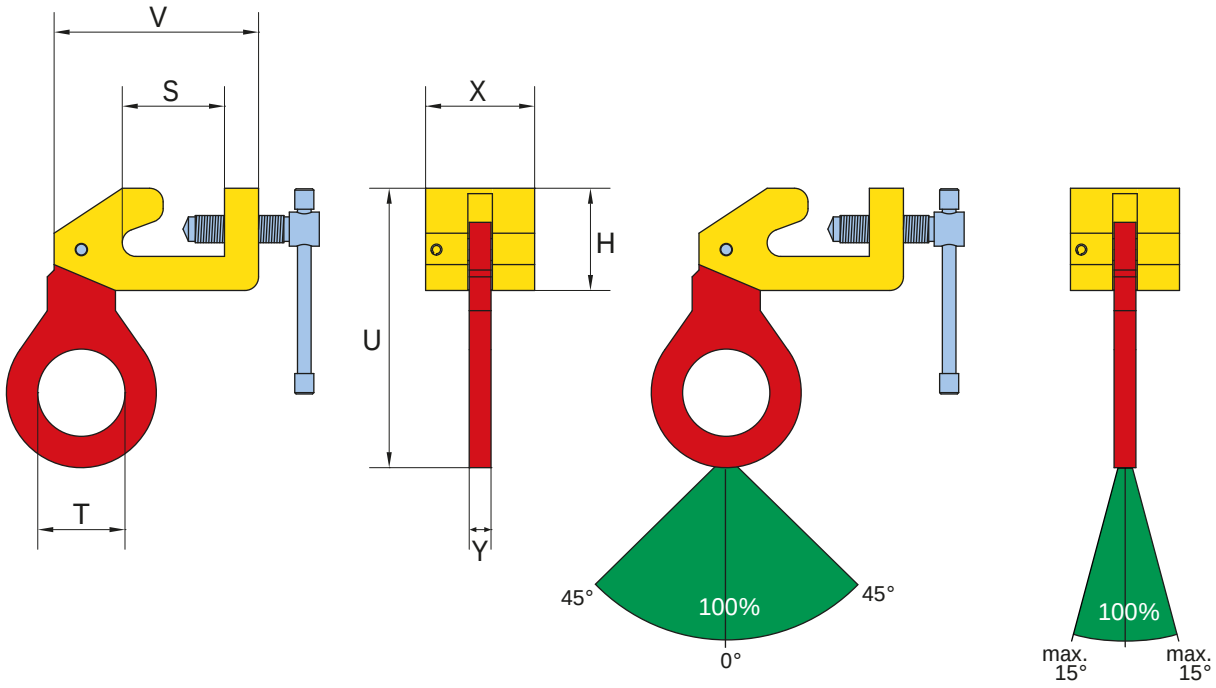


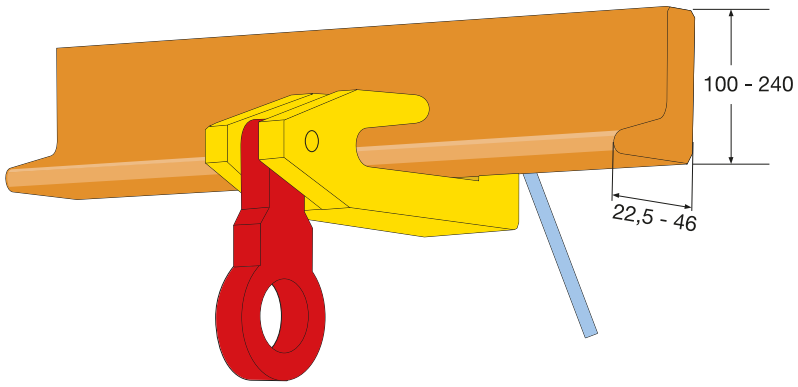


| Artikel Nr. | Model | Capaciteit (kg/st) | Bek-opening (R) (mm) | Afmeting in mm | | | | | | | Gewicht (kg/st) |
|---|---|---|---|---|---|---|---|---|---|---|---|
| | | | | V | S | T | U | H | X | Y | |
| 862150 | 1.5 TBS | 1500 | HP100-240 | 150 | 74 | 45 | 180 | 75 | 40 | 16 | 2,9 |
| 862400 | 3 TBS | 3000 | HP100-240 | 150 | 75 | 65 | 205 | 75 | 80 | 16 | 6 |

# VATEN HIJSEN




TERRIER LIFTING CLAMPS
MADE IN HOLLAND
QUALITY CLAMPS YOU CAN TRUST

# TVK

## Speciale lichtgewicht heavy duty klem voor het hijsen van vaten



### Toepassing:

- Ontworpen voor veilig hijsen, hanteren en transporteren van stalen (olie)vaten
- Enkele klem toepassing op lege of afgesloten vaten. TVK kan zowel enkel als per paar gebruikt worden
- Gevulde open vaten moeten gehesen worden met twee klemmen en een tweesprong
- Bek-opening verkrijgbaar vanaf: 0 tot 17 mm
- Capaciteit (WLL) 500 kg

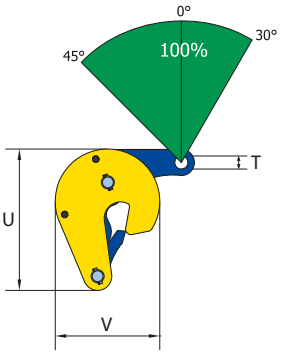


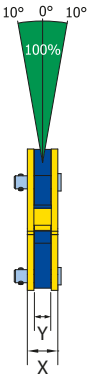


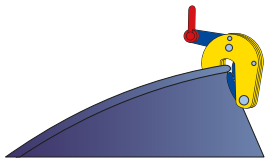

### Kenmerken en voordelen:

- Met automatisch vergrendelmechanisme
- Lichtgewicht ontwerp voor gemakkelijk hanteren
- Krachtige heavy duty gelaste behuizing
- Onderhoudsvriendelijk, gemakkelijk te verwisselen onderdelen die verkrijgbaar zijn op verzoek

| Artikel Nr. | Model | Capaciteit (kg/st) | Bek-opening (R) (mm) | Afmeting in mm | | | | | Gewicht (kg/st) |
|---|---|---|---|---|---|---|---|---|---|
| | | | | U | V | T | X | Y | |
| 828000 | TVK | 500 | 0 - 17 | 121 | 96 | 12 | 28 | 15 | 1,3 |

# TVKH

## Speciale lichtgewicht heavy duty klem voor het hijsen van rechtopstaande vaten



### Toepassing:

- Ontworpen voor hijsen, hanteren en transporteren van (olie)vaten, waarbij de vaten rechtop moeten blijven
- Enkele klem toepassing op lege of gevulde vaten
- Tijdens hijsen en transporteren bevindt het zwaartepunt van het vat zich altijd onder het hijsoog
- Bek-opening verkrijgbaar vanaf: 0 tot 25 mm
- Capaciteit (WLL) 600 kg

### Kenmerken en voordelen:

- Lichtgewicht en compact ontwerp om gemakkelijk in krappe ruimten tussen andere vaten te plaatsen
- Krachtige heavy duty gelaste behuizing
- Uitgerust met een handmatig veiligheidsvergrendelmechanisme zodat de klem in open toestand niet dichtvalt
- Onderhoudsvriendelijk, gemakkelijk te verwisselen onderdelen die verkrijgbaar zijn op verzoek

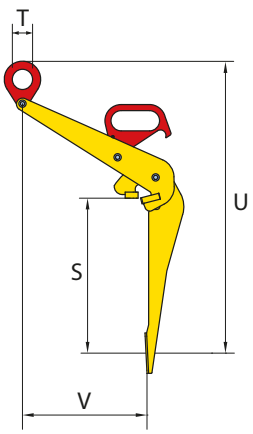





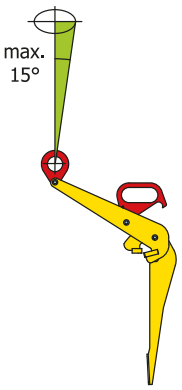


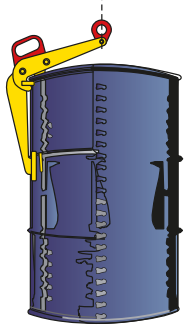

| Artikel Nr. | Model | Capaciteit (kg/st) | Bek-opening (R) (mm) | Afmeting in mm | | | | | | Gewicht (kg/st) |
|---|---|---|---|---|---|---|---|---|---|---|
| | | | | U | S | V | T | X | Y | |
| 828100 | TVKH | 600 | 0 - 25 | 765 | 434 | 305 | 50 | 100 | 10 | 7 |

# TVSH



## Speciale lichtgewicht heavy duty klem voor het hijsen van liggende vaten

### Toepassing:

- Ontworpen voor hijsen, hanteren en transporteren van (olie)vaten in liggende positie
- Enkele klem toepassing op lege of gevulde vaten
- Tijdens hijsen en transporteren bevindt het zwaartepunt van het vat zich altijd onder het hijsoog
- Bek-opening verkrijgbaar vanaf: 500 tot 900 mm
- Capaciteit (WLL) 600 kg

### Kenmerken en voordelen:

- Lichtgewicht en compact ontwerp om gemakkelijk in krappe ruimten tussen andere vaten te plaatsen
- Krachtige heavy duty gelaste behuizing
- Uitgerust met een handmatig veiligheidsvergrendelmechanisme zodat de klem in open toestand niet dichtvalt
- Onderhoudsvriendelijk, gemakkelijk te verwisselen onderdelen die verkrijgbaar zijn op verzoek

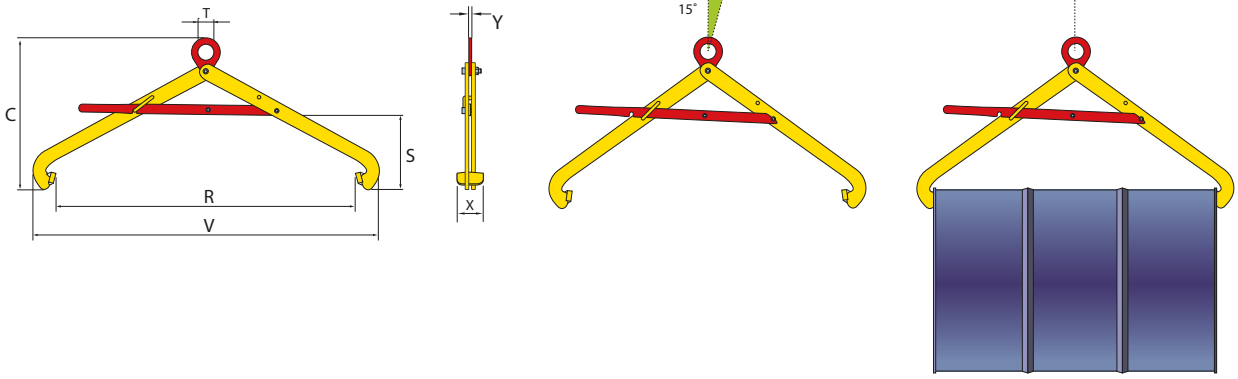


| Artikel Nr. | Model | Capaciteit (kg/st) | Bek-opening (R) (mm) | Afmeting in mm | | | | | | Gewicht (kg/st) |
|---|---|---|---|---|---|---|---|---|---|---|
| | | | | U | S | V | T | X | Y | |
| 828200 | TVSH | 600 | 500-900 | 475 | 230 | 1080 | 50 | 82 | 10 | 7 |

# BUIZEN HIJSEN



TERRIER LIFTING CLAMPS
MADE IN HOLLAND
QUALITY CLAMPS YOU CAN TRUST

# TPH / TPH-HD



## Heavy duty klem met hogedrukbestendig plastic voor horizontaal hijsen van buizen

### Toepassing:

- Voor horizontaal hijsen en transporteren van stalen en betonnen buizen zonder het product te beschadigen
- De TPH-HD versie is speciaal ontworpen voor extreem heavy duty hijssituaties (bijv. laden en lossen van schepen)
- Terrier TPH hijsklemmen moeten altijd in paren worden gebruikt
- Bek-openingen verkrijgbaar tot en met 70 mm
- Capaciteit (WLL) 1500 - 60000 kg per paar (hogere WLL verkrijgbaar op verzoek)

### Kenmerken en voordelen:

- TPH bek is bedekt met een speciaal hoogwaardig drukbestendig plastic
- TPH-HD bek is bedekt met een speciaal hoogwaardig extreem hogedrukbestendig plastic
- Onderhoudsvriendelijke klemmen, plastic drukbestendige covers zijn gemakkelijk te verwisselen
- TPH-HD heeft speciale hendel voor makkelijker gebruik
- Compact ontwerp en hoog hijsvermogen
- Lichtgewicht ontwerp om gemakkelijk te kunnen hanteren
- Krachtige kwaliteit heavy duty behuizing



### TPH

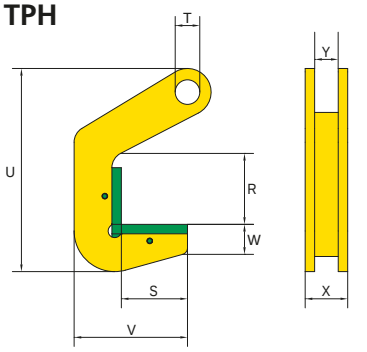


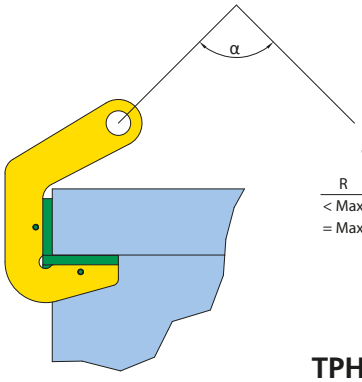


**TPH**

| R | α |
|---|---|
| < Max | 10 - 60° |
| = Max | 10 - 90° |

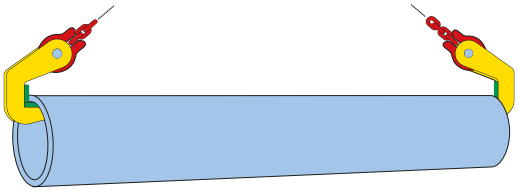

### TPH-HD

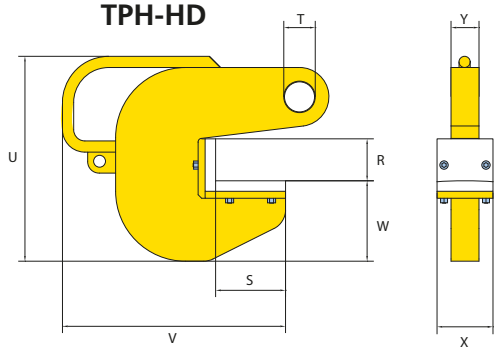


**TPH-HD**

| R | α |
|---|---|
| < Max | 10 - 90° |
| = Max | 10 - 120° |

| Artikel Nr. | Model | Capaciteit (kg/pair) | Bek-opening (R) (mm) | Afmeting in mm | | | | | | | Gewicht (kg/st) |
|---|---|---|---|---|---|---|---|---|---|---|---|
| | | | | V | S | W | U | T | X | Y | |
| 960150 | 1.5 TPH | 1500 | 0 - 40 | 120 | 70 | 50 | 185 | 16 | 41 | 25 | 2 |
| 960300 | 3 TPH | 3000 | 0 - 40 | 120 | 70 | 50 | 185 | 16 | 41 | 25 | 2 |
| 960400 | 4 TPH | 4000 | 0 - 40 | 140 | 70 | 58 | 204 | 26 | 41 | 25 | 3 |
| 960600 | 6 TPH | 6000 | 0 - 50 | 140 | 70 | 58 | 204 | 26 | 41 | 25 | 3 |
| 960800 | 8 TPH | 8000 | 0 - 70 | 140 | 70 | 58 | 224 | 26 | 45 | 25 | 3,4 |
| 960810 | 10TPH | 10000 | 0 - 70 | 140 | 70 | 58 | 224 | 26 | 85 | 45 | 7 |
| 960812 | 12TPH | 12000 | 0 - 70 | 140 | 70 | 58 | 224 | 26 | 85 | 45 | 7 |
| 960915 | 15TPH | 15000 | 0 - 70 | 155 | 70 | 76 | 250 | 26 | 100 | 60 | 9 |
| 960920 | 20TPH | 20000 | 0 - 70 | 155 | 70 | 76 | 250 | 26 | 100 | 60 | 9 |
| | | | | | | | | | | | |
| 965050 | 5 TPH-HD | 5000 | 0 - 60 | 309 | 100 | 85 | 232 | 26 | 80 | 20 | 6,7 |
| 965100 | 10 TPH-HD | 10000 | 0 - 60 | 319 | 100 | 85 | 236 | 36 | 80 | 30 | 9,7 |
| 965200 | 20 TPH-HD | 20000 | 0 - 60 | 362 | 100 | 105 | 285 | 51 | 80 | 35 | 14 |
| 965300 | 30 TPH-HD | 30000 | 0 - 60 | 387 | 100 | 115 | 310 | 58 | 80 | 40 | 19 |
| 965600 | 60 TPH-HD | 60000 | 0 - 60 | 418 | 100 | 115 | 350 | 85 | 80 | 60 | 35 |

# TBC / TBC-A



## Lichtgewicht klem met drukbestendig plastic segment voor verticaal hijsen van betonnen buizen

### Toepassing:

- Voor verticaal hijsen en transporteren van betonnen buizen en putten
- Terrier TBC / TBC-A hijsklemmen moeten altijd in paren worden gebruikt (of per drie klemmen)
- TBC bek-opening verkrijgbaar vanaf: 60 tot 120 mm
- TBC-A heeft een verstelbare extra grote bek-opening verkrijgbaar vanaf: 50 tot 220 mm (verstelbaar in stappen van 25 mm)
- Capaciteit (WLL) 1000 kg
- Grotere bek-openingen verkrijgbaar op verzoek

### Kenmerken en voordelen:

- Het segment is bedekt met een speciaal hoogwaardig drukbestendig plastic
- Onderhoudsvriendelijke klem, plastic drukbestendige drukvoet is gemakkelijk te verwisselen
- Krachtige heavy duty gelaste behuizing
- Lichtgewicht ontwerp om gemakkelijk te kunnen hanteren

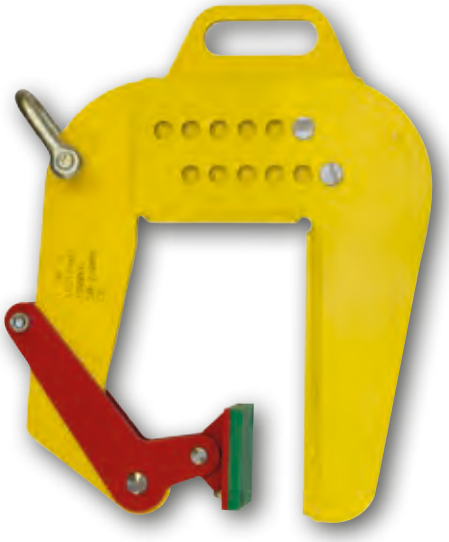

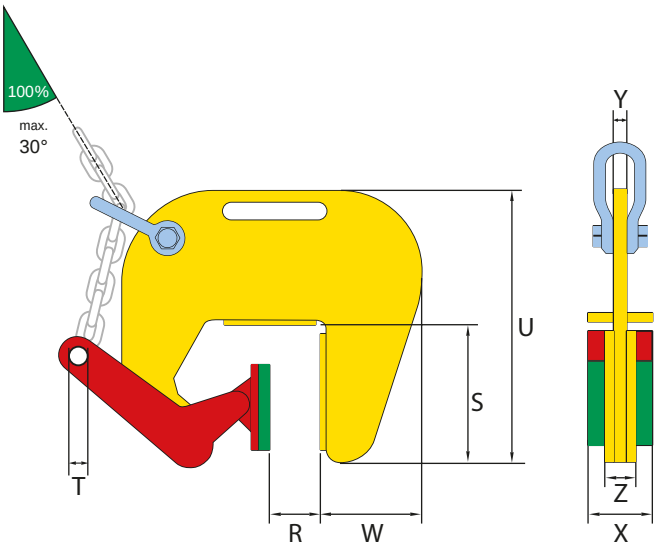


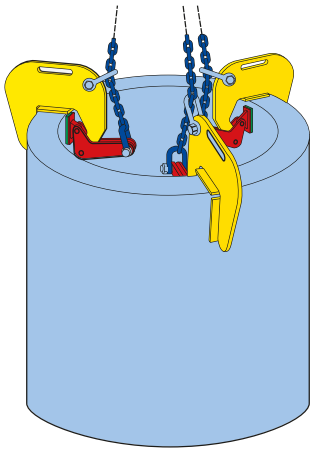

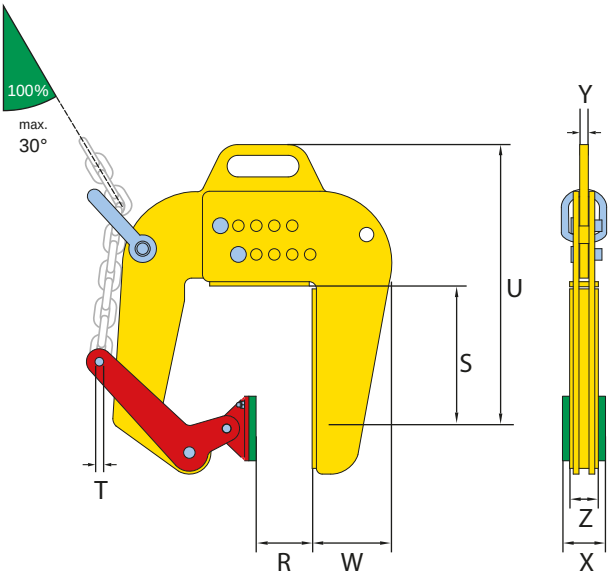


| Artikel Nr. | Model | Capaciteit (kg/pc) | Bek-opening (R) (mm) | Afmeting in mm | | | | | | | Gewicht (kg/pc) |
|---|---|---|---|---|---|---|---|---|---|---|---|
| | | | | U | S | W | T | X | Z | Y | |
| 870101 | 1 TBC | 1000 | 60 -120 | 326 | 169 | 97 | 12 | 60 | 40 | 12 | 10 |
| 870105 | 1 TBC-A | 1000 | 50 -220 | 459 | 262 | 106 | 12 | 60 | 40 | 12 | 15 |

# TTL

## Lichtgewicht klem voor horizontaal hijsen van buizen, pijpen en stevige ronde materialen



### Toepassing:

- Voor horizontaal hijsen en transporteren van buizen, pijpen, buizenbundels, rollen en andere stevige ronde materialen
- De klem is vergrendeld in de open stand. Om te hijsen moet de bediener de hendel activeren en deze omhoog houden terwijl de kracht op het hijsoog omhoog gaat. Als de last wordt neergezet, vergrendelt de klem zich automatisch in de open stand
- TTL bek-opening verkrijgbaar vanaf: 48,3 tot 508 mm
- Capaciteit (WLL) 500 - 3000 kg
- Hogere WLL of bek-openingen verkrijgbaar op verzoek

### Kenmerken en voordelen:

- Lichtgewicht ontwerp en gebruiksvriendelijk
- Krachtige behuizing
- Kan worden geleverd met bescherming om het beschadigen van de last te voorkomen

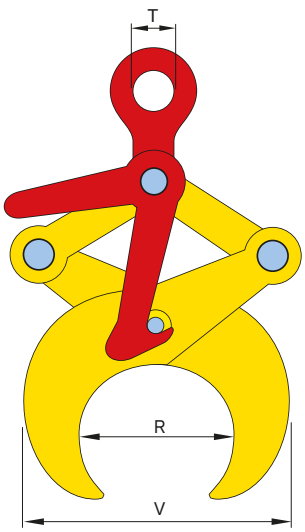


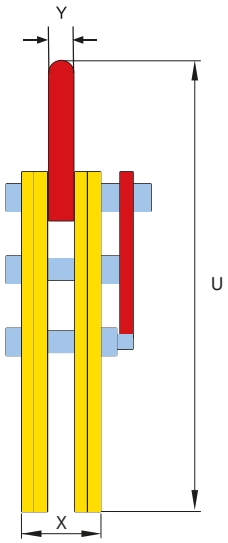


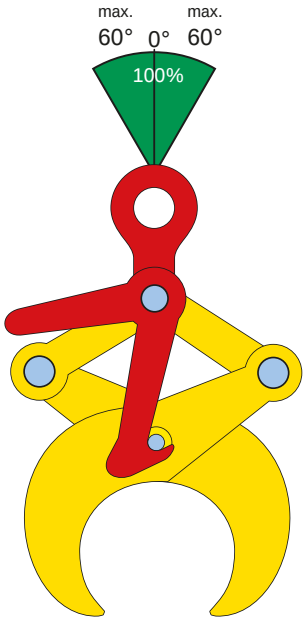


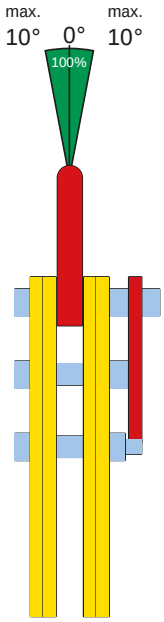


| Artikel Nr. | Model | Capaciteit (kg/st) | Bek-opening (R) (mm) | Afmeting in mm | | | | | Gewicht (kg/st) |
|---|---|---|---|---|---|---|---|---|---|
| | | | | V min-max | U min-max | T | X | Y | |
| 800550 | 0.5 TTL | 500 | 48,3 - 114,3 | 146-207 | 300-400 | 45 | 47 | 15 | 4,5 |
| 801011 | 1 TTL | 1000 | 114,3 - 219,1 | 225-320 | 430-615 | 45 | 47 | 15 | 9 |
| 802021 | 2 TTL | 2000 | 219,1 - 368 | 490-610 | 670-955 | 64 | 56 | 16 | 31 |
| 803036 | 3 TTL | 3000 | 368 - 508 | 590-710 | 875-1165 | 64 | 56 | 16 | 39 |

# SPECIAAL HIJSEN




TERRIER LIFTING CLAMPS
MADE IN HOLLAND
QUALITY CLAMPS YOU CAN TRUST

# EXTRA HARD STAAL



## Extra geharde taats en segment voor het hijsen van hardstaal

**Toepassing:**

- Voor verticaal hijsen, transporteren en draaien van alle staalplaten met een hardheid van max. 55 HRC. Vraag naar uitgebreide specificaties
- Controleer de toepassing, capaciteitsdiagrammen en hijsoogvarianten voor onderstaande typen op pagina's 9, 10 en 11
- Bek-openingen verkrijgbaar vanaf: 0 tot 55 mm. Capaciteit (WLL) 750 - 7500 kg
- Min. WLL is 10% van max. WLL.

**Opmerking: Het plaatoppervlak van het materiaal mag een hardheidsniveau hebben van max. HRC 55/560 Hb**

**Kenmerken en voordelen:**

- Uitgerust met een extra geharde taats en segment
- Segment is groen gekleurd om gemakkelijk te kunnen herkennen
- Altijd uitgerust met een veiligheidsmechanisme zodat de klem niet loslaat als er hijskracht wordt uitgeoefend en wanneer men de last laat zakken
- De klem is vergrendeld in gesloten en open stand
- Lichtgewicht ontwerp om gemakkelijk te kunnen hanteren
- Krachtige heavy duty gelaste behuizing
- Onderhoudsvriendelijk, gemakkelijk te verwisselen onderdelen die verkrijgbaar zijn op verzoek



| Artikel Nr. | Model | Capaciteit (kg/st) | Bek-opening (R) (mm) | Afmeting in mm | | | | | | | Gewicht (kg/st) |
|---|---|---|---|---|---|---|---|---|---|---|---|
| | | | | S | T | U | V | W | X | Y | |
| 850000.5 | 0.75 TS-H | 750 | 0 - 13 | 47 | 30 | 202 | 100 | 37 | 37 | 10 | 1,7 |
| 850880.5 | 1 TSE-H | 1000 | 0 - 25 | 56 | 45 | 263 | 141 | 37 | 47 | 15 | 3,5 |
| 850901.5 | 2 TSE-H | 2000 | 0 - 35 | 78 | 64 | 336 | 183 | 56 | 56 | 16 | 7 |
| 850331.5 | 3 TSE-H | 3000 | 0 - 35 | 78 | 64 | 336 | 183 | 56 | 56 | 16 | 7 |
| 850451.5 | 4.5 TSE-H | 4500 | 0 - 45 | 85 | 70 | 425 | 228 | 60 | 78 | 20 | 16 |
| 851411.5 | 6 TSE-H | 6000 | 0 - 50 | 114 | 75 | 490 | 259 | 82 | 78 | 20 | 21 |
| 851501.5 | 7.5 TSE-H | 7500 | 0 - 55 | 111 | 75 | 522 | 267 | 70 | 86 | 20 | 26 |
| | | | | | | | | | | | |
| 850010.5 | 0.75 TSMP-H | 750 | 0 - 13 | 47 | 30 | 307 | 100 | 37 | 37 | 10 | 2 |
| 850818.5 | 1 TSEMP-H | 1000 | 0 - 25 | 56 | 45 | 403 | 141 | 37 | 47 | 15 | 4,5 |
| 850911.5 | 2 TSEMP-H | 2000 | 0 - 35 | 78 | 64 | 516 | 183 | 56 | 56 | 16 | 8 |
| 850221.5 | 3 TSEMP-H | 3000 | 0 - 35 | 78 | 64 | 516 | 183 | 56 | 56 | 16 | 8 |
| 851401.5 | 4.5 TSEMP-H | 4500 | 0 - 45 | 85 | 70 | 650 | 228 | 60 | 78 | 20 | 19 |
| 850311.5 | 6 TSMP-H | 6000 | 0 - 32 | 114 | 75 | 760 | 225 | 78 | 78 | 20 | 24 |
| 851510.5 | 7.5 TSEMP-H | 7500 | 0 - 55 | 111 | 75 | 792 | 267 | 70 | 86 | 20 | 30,5 |
| | | | | | | | | | | | |
| 855000.5 | 0.75 TSU-H | 750 | 0 - 13 | 47 | 30 | 203 | 100 | 37 | 37 | 10 | 1,8 |
| 865800.5 | 1 TSEU-H | 1000 | 0 - 25 | 56 | 50 | 292 | 141 | 37 | 47 | 15 | 3,8 |
| 855601.5 | 2 TSEU-H | 2000 | 0 - 35 | 78 | 70 | 372 | 183 | 56 | 56 | 16 | 8 |
| 865331.5 | 3 TSEU-H | 3000 | 0 - 35 | 78 | 70 | 372 | 183 | 56 | 56 | 16 | 8 |
| 865301.5 | 4.5 TSEU-H | 4500 | 0 - 45 | 85 | 70 | 431 | 228 | 60 | 78 | 20 | 16,5 |
| 865411.5 | 6 TSEU-H | 6000 | 0 - 50 | 114 | 78 | 527 | 259 | 82 | 78 | 32 | 24 |
| 855400.5 | 7.5 TSEU-H | 7500 | 0 - 55 | 111 | 78 | 560 | 267 | 70 | 86 | 32 | 28 |

# BETON PLATEN



## Heavy duty plaathaken voor het hijsen van beton platen

**Toepassing:**
- Voor verticaal hijsen en transporteren van (beton)platen
- Alleen te gebruiken op platen met 2 gaten van 55 x 25 mm (standaard)
- Terrier plaathaken moeten altijd in paren worden gebruikt
- Capaciteit 1500 kg

**Let op: Ketting en toebehoren zijn NIET inbegrepen**

**Kenmerken en voordelen:**
- Lichtgewicht ontwerp om gemakkelijk te kunnen hanteren
- Krachtige verzinkte heavy duty haken

**Artikelnummer 862500 (zonder ketting en toebehoren)**
**Artikelnummer 862501 (met ketting)**

# TRC



## Lichtgewicht heavy duty klem voor horizontaal hijsen van (spoor)railprofielen

**Toepassing:**
- Voor horizontaal hijsen, transporteren en draaien van (spoor)railprofielen
- Bek-opening verkrijgbaar vanaf: 40 tot 75 mm. Capaciteit 1500 kg
- Vanwege de ruime keuze aan (spoor)railprofielen zijn andere profielafmetingen en capaciteiten verkrijgbaar op verzoek

**Kenmerken en voordelen:**
- Met speciaal segment voor (spoor)railprofielen
- Altijd uitgerust met een veiligheidsmechanisme zodat de klem niet loslaat als er hijskracht wordt uitgeoefend en wanneer men de last laat zakken
- De klem is vergrendeld in gesloten en open stand
- Lichtgewicht ontwerp om gemakkelijk te kunnen hanteren
- Krachtige heavy duty gelaste behuizing
- Onderhoudsvriendelijk, gemakkelijk te verwisselen onderdelen die verkrijgbaar zijn op verzoek

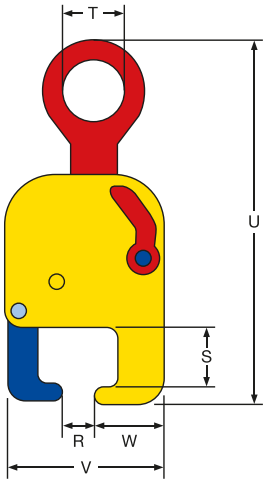





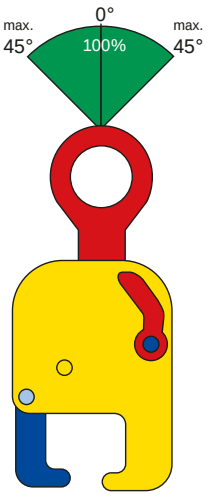


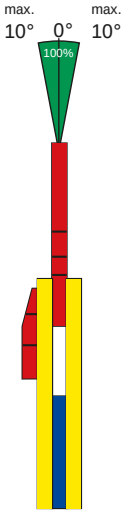




| Artikel Nr. | Model | Capaciteit (kg/st) | Bek-opening (R) (mm) | Afmeting in mm | | | | | | | Gewicht (kg/st) |
|---|---|---|---|---|---|---|---|---|---|---|---|
| | | | | S | T | U | V | W | X | Y | |
| 815000 | TRC | 1500 | 40-75 | 64 | 65 | 394 | 170 | 73 | 48 | 16 | 7 |

# RESERVEONDERDELEN

Alle reserveonderdelen zijn afzonderlijk of als reparatiesets verkrijgbaar. Terrier reserveonderdelensets worden geleverd met speciale korting. Het wordt aanbevolen beschadigde onderdelen onmiddellijk te vervangen om risico's te vermijden.

## Als u reserveonderdelen bestelt vermeld dan altijd: model, hijscapaciteit, bek-opening en serienummer van de klem, alsmede de benodigde onderdelen.

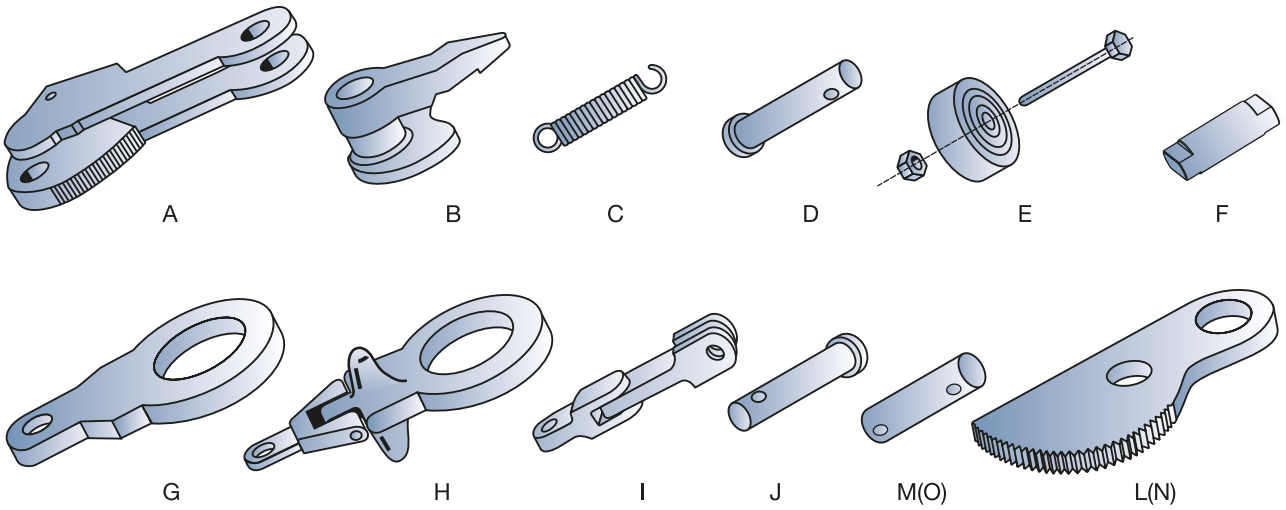


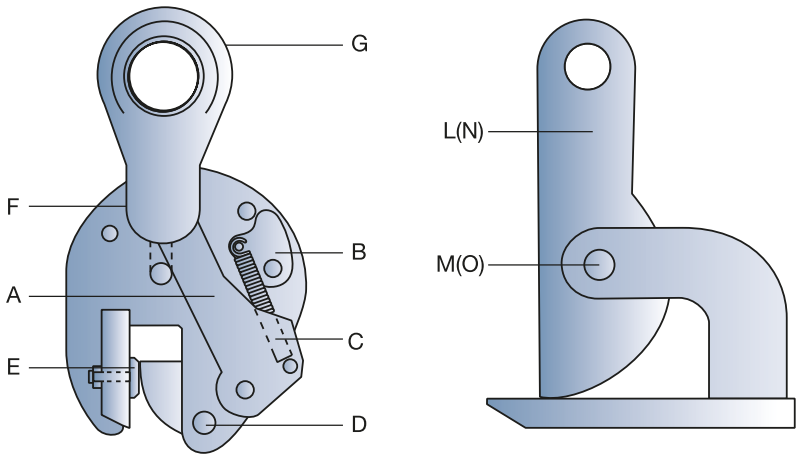


A Segmentassy
B Grendelassy
C Spanveer
D Segmentpen
E Taatsset compleet
F Hijsoogas
G Hijsoog voor TS-, STS-, MP-model
H Hijsoog voor TSU-, TSEU-model
I Gaffelset voor TSMP-, STSMP-model
J Scharnierpen voor MP-model
L Segment voor FHX-model
M Segmentpen voor FHX-model
N Segment voor FHSX-model
O Segmentpen voor FHSX-model

Voor alle verticale klemmen zijn revisiesets en reparatiesets verkrijgbaar.

De ***reparatiesets*** bevatten:
A: Segmentassy
C: Spanveer
D: Segmentpen
E: Taatsset compleet

De ***revisiesets*** bevatten:
A: Segmentassy
B: Grendelassy
C: Spanveer
D: Segmentpen
E: Taatsset compleet



Reparatieset

# TERRIER

LIFTING CLAMPS & EQUIPMENT

**WWW.DECORLUX.BE**

Find us on

YouTube

youtube.com/terrierliftingclamps




2020/2021 NL

DECORLUX
HIJSTECHNIEK
TECHNIQUE LEVAGE
HEBETECHNIK
LIFTING TECHNICS



- Lifting Beams
  Standard | Adjustable |Dismountable |Aluminium
- Spreader Beams
  Modular | Standard |Delta Spreader Plate |Adjustable
- Lifting Beams for Big-Bags
- Lifting beams & Spreader Beams for ISO-containers
- Lifting Beam Assembly Concrete Columns & vertical slabs

# Description of abbreviations, acronyms and designations

**WLL** Working Load Limit - The maximum load weight that can be lifted or supported safely and without permanent damage.

CE Declaration Of conformity — The product is marked with the CE conformity mark and has an EC declaration of conformity issued by the manufacturer, confirming that the marked product meets the requirements of the relevant EU directives.

**2006/42/EC** manufactured according to Directive — The product complies with the Machinery Directive 2006/42/EC, which confirms the performance of tasks leading to the fulfillment of health and safety requirements for machines placed on the market for the first time in the EU. If another Directive is indicated, it means the compliance of the product with the indicated Directive.

**-20+200°C** working temperature — Permissible product temperature range when operating at rated load. Some products can operate at higher temperatures provided the permissible load is reduced, some are permanently damaged when the temperature range is exceeded. Detailed information on this subject can be found in the product documentation.

**EN 13155** meets the Standard — The product meets the requirements of the EN 13157 standard "Cranes - Safety - Hand-operated lifting devices" for manual lifting devices such as chain winches, crane winches and multi-blocks

**INOX** — The product is made of stainless steel, resistant to corrosion from atmospheric agents, dilute acids and alkaline solutions.

**20 000** max. ilość cykli pracy — Operating life of the device assuming nominal operating conditions and nominal load. The given parameter can be used to estimate the technical condition of the device or the degree of wear.

**endurance test** 100% according to EN 13155 — Each product offered has been subjected to a strength test in accordance with the relevant annex to the harmonized standard PN-EN 13155

load WLL **1-5t** — Nominal load capacity. The range of lifting capacity values given refers to the entire range offered and not necessarily to a single model.

# Selection of devices depending on work intensity

The introduction of an additional classification of devices, depending on operating conditions, provides designers with a rational basis for designing mechanisms and supporting structures for specific operating conditions. On this basis, the user can select a device tailored to the desired operating conditions and ensure safe operation throughout the entire period of use.

The use of classifications according to operating conditions and related technical procedures improves operational safety by reducing the risks resulting from fatigue and aging of materials.
Users of mass-produced cranes are legally obliged to determine the actual period of use, constantly monitor the degree of resource utilization and, on this basis, carry out inspections, renovations or decommissioning.

Design differences between devices with the same main performance parameters and different classes can be significant.
For example: a 100t block in M7(4m) class may weigh three times more than a 100t block in the M3(1Bm) class.

There are several standardized classification systems in place:

- ISO 4301-1 standard classifying mechanisms in M1-M8 classes (mechanism load classes L1-L4 with intensity of use T0-T9) and entire cranes in A1-A8 classes (load classes Q1-Q4 with intensity of use U0-U9)
- The EN 13001-1 standard introducing classes Q0-Q5 for the load spectrum, U0-U9 for the number of work cycles, D0-D9 for average displacements, P0-P3 for auxiliary movements, S0-S9 for load history
- The FEM 9.755 standard (Fédération Européenne de la Manutention) introduces 8 work intensity classes: 1Dm, 1Cm, 1Bm, 1Am, 2m, 3m, 4m, 5m which are identical and interchangeable with classes according to ISO 4301

## Determining the mechanism work intensity M-class

To determine M-class of a mechanism (according to the ISO 4301-1 standard), two factors must be taken into account:

- the intensity of use by specifying the number of work cycles or average daily working time,
- L-class describing the multiplicity of loads that are part of the lifting capacity of the crane

## Mechanism load L-class

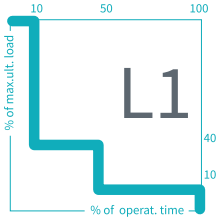


### **L1**-LIGHT

*Occasional heavy load. Usually light load. Low constant load.*

Working class - average daily working time [h]

| | ≤ 2 | 2-4 | 4-8 | 8-16 | ≤ 16 | > 16 |
|---|---|---|---|---|---|---|
| Recommended class | 1Bm (M3) | 1Am (M4) | 2m (M5) | 3m (M6) | 4m (M7) | 5m (M8) |

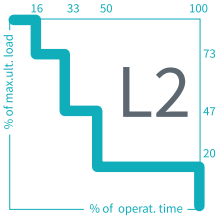


### **L2**-MIDDLE

*Occasional heavy load. Usually light load. Medium constant load.*

Working class - average daily working time [h]

| | ≤ 1 | 1-2 | 2-4 | 4-8 | 8-16 | ≤ 16 |
|---|---|---|---|---|---|---|
| Recommended class | 1Bm (M3) | 1Am (M4) | 2m (M5) | 3m (M6) | 4m (M7) | 5m (M8) |

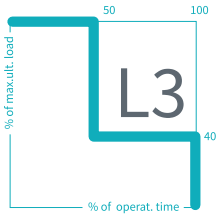


### **L3**-HEAVY

*Repetitive full load. Usually medium load. Heavy permanent load.*

Working class - average daily working time [h]

| | < 0,5 | 0,5-1 | 1-2 | 2-4 | 4-8 | 8-16 |
|---|---|---|---|---|---|---|
| Recommended class | 1Bm (M3) | 1Am (M4) | 2m (M5) | 3m (M6) | 4m (M7) | 5m (M8) |

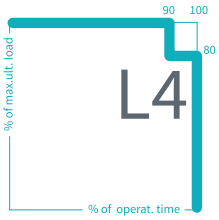


### **L4**-VERY HEAVY

*Usually almost full load. Very heavy permanent load.*

Working class - average daily working time [h]

| | ≤ 0,25 | 0,25-0,5 | 0,5-1 | 1-2 | 2-4 | 4-8 |
|---|---|---|---|---|---|---|
| Recommended class | 1Bm (M3) | 1Am (M4) | 2m (M5) | 3m (M6) | 4m (M7) | 5m (M8) |

| M-class of the mechanism considered as a whole | | (M1) | (M2) | 1Bm (M3) | 1Am (M4) | 2m (M5) | 3m (M6) | 4m (M7) | 5m (M8) |
|---|---|---|---|---|---|---|---|---|---|
| Load type | coeff $K_m$ | Resource D of the device (estimated working time) [h] | | | | | | | |
| L1 | < 0,125 | 800 | 1 600 | 3 200 | 6 300 | 12 500 | 25 000 | 50 000 | 100 000 |
| L2 | 0,125-0,25 | 400 | 800 | 1 600 | 3 200 | 6 300 | 12 500 | 25 000 | 50 000 |
| L3 | 0,25-0,5 | 200 | 400 | 800 | 1 600 | 3 200 | 6 300 | 12 500 | 25 000 |
| L4 | 0,5-1 | 100 | 200 | 400 | 800 | 1 600 | 3 200 | 6 300 | 12 500 |

The average theoretical service life of mass-produced lifting mechanisms should be 10 years.
Taking into account the load class, the following theoretical service life, expressed in the total number of hours worked, can be assigned to mechanisms with a specific M-class. It should be noted that each subsequent higher M-class means twice the theoretical service life.
Similarly, each subsequent load class L means twice as short theoretical service life.

Permissible number of cycles and working time for individual M-classes

| M-class | Intermittent operation cycles/h | Intermittent operation cycles/h | Working with short breaks duration min per hour |
|---|---|---|---|
| 1Bm (M3) | 25 | 250 | 15 |
| 1Am (M4) | 30 | 180 | 15 |
| 2m (M5) | 40 | 240 | 30 |
| 3m (M6) | 50 | 300 | 30 |
| 4m (M7) | 60 | 360 | 60 |
| 5m (M8) | 60 | 360 | 60 |

Knowing m-class of the device, you can determine the permissible number of work cycles and the duration of work with short breaks based on the table below.

# Corrosion protection

The offered products are protected against corrosion by machine shot-blasting and two-layer spray painting of finished structures with appropriately selected paint and primer.




The coating described above ensures, in accordance with the EN ISO 12944-2:2001 standard, corrosion class C2.

Higher corrosion class finishes are available on request as options.

An alternative method of anti-corrosion protection used on selected products and elements is zinc hot-dip galvanizing or electrogalvanizing.

Minimizing the risk of rapid corrosion of our products begins at the design and production stages and includes:

- selection of materials taking into account corrosion resistance,
- simplification of the structure (reducing the number of places of potential corrosion centers),
- joint analysis (reducing the number of weld rivets and screw connections),
- selection of anti-corrosion technologies at the production stage.

## Color

Base color:

RAL 1007 yellow narcissus

Complementary colors:

RAL 2008 orange
RAL 3020 Cuban red
RAL 9010 alpine white
RAL 7035 light gray
RAL 7043 dark gray
RAL 9004 signal black
RAL 5002 ultramarine
RAL 6001 emerald green

Samples of the above colors are shown in the drawing.
It is possible to finish our products with any other color available on the market.

DECORLUX
HIJSTECHNIEK
TECHNIQUE LEVAGE
HEBETECHNIK
LIFTING TECHNICS




# Lifting beams & Spreader Beams for ISO-containers

# Remarks to Lift a Shipping Container?

Hundreds of thousands of containers are lifted every day. Lifting a container is however not without risks.

For a number reasons (limited lifting height, limited crane capacity, ...) it is often asked if a spreader is really necessary to lift a container.

The answer is – in most cases – yes.

## Why lifting a container by its top corners, using only a 4-legged sling, is not permitted?

A typical 4-legged sling, attached to the four top corners of a container induces compression loads in the roof plane of the container, especially lengthwise. Containers are not designed to take this compression load at the roof plane in a lengthwise direction. The actual strength of the roof varies from container to container, depending on the manufacturer, age, size ... Therefore it is possible that several lifts are made with only a 4-legged sling, and that no particular problem is noticed.

The operator is lured into believing that this is a safe way of handling the containers.

However, due to this practice, unseen damage is done to the container and every lift can lead to the instant breaking of the container.

## Why a spreader should be used between the 4-legged sling and the container?

When using a spreader, the compression load is no longer induced on the roof of the container, but directly on the spreader (which is designed for this load).

The top frame of the container is thus free of compression loads.

The container is now lifted vertically in combination with a set of four TCO lifting lugs, in accordance with the attached operating instructions, which is allowed for top lifting, by the international standard (ISO 1496)

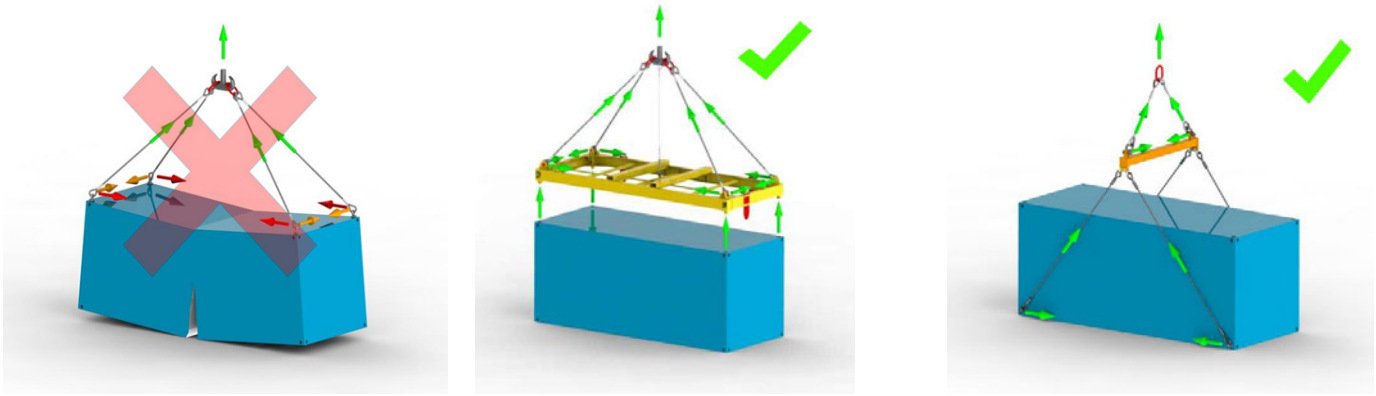

## What to do if no spreader is available?

There is still a possibillity to lift a container without a spreader, using bottom lifting lugs (TCU) These parts fit the side holes of the bottom corners of the container. In this case, the compression load in a lengthwise direction is taken by the floor frame of the container, which is a lot stronger than the roof plane.

The transverse compression load is absorbed by the crossbar- Spreader Beam.

This method of lifting is also mentioned in the ISO 1496 standard.

Another advantage of this system is that the required lifting height is in most cases less than when using a spreader.

The TCU lifting lug has been designed for bottom side lifting of ISO shipping containers. The lifting lugs must be used in accordance with the attached operating instructions for model TCU, also noting the reduced capacity in accordance with the angle of the slinging arrangement.

Fitting the lugs to the ends of the container using the correct ISO corners castings in accordance with ISO 1165 is also acceptable.

Each container corner, contrary to what we might think, have actually four different types of casting shapes used to make the eight corners of a typical ISO container, each side has a uniquely shaped insert hole.

The chosen type of Lifting lug must always suitable for the corresponding insert hole of the container.

**Top corner fittings**

Type 1 - upper left
(Type 2 mirror inverted - upper right)

In accordance with ISO 1161 (1984)

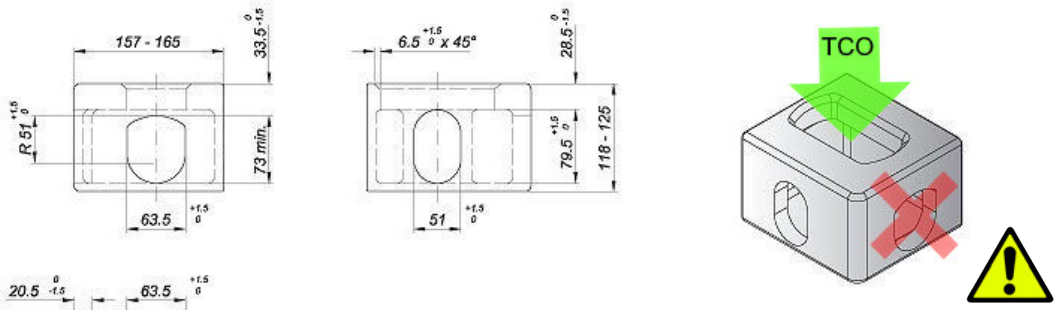


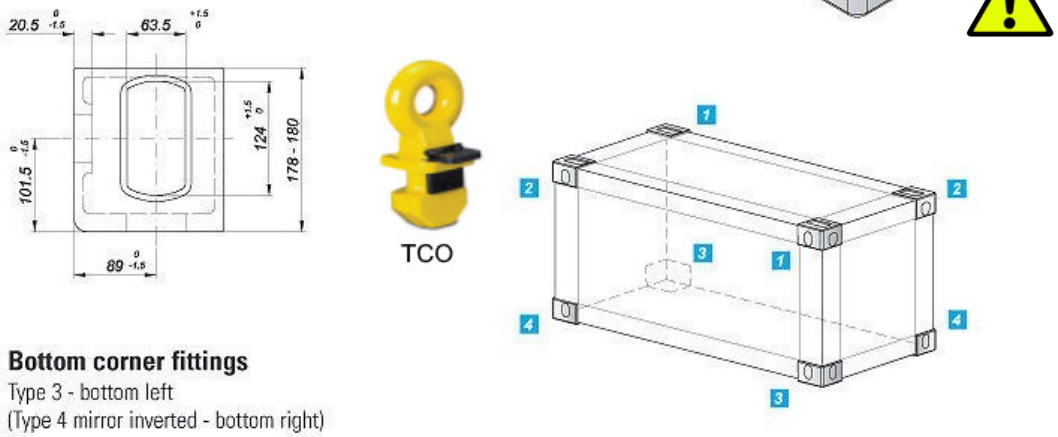


**Bottom corner fittings**

Type 3 - bottom left
(Type 4 mirror inverted - bottom right)

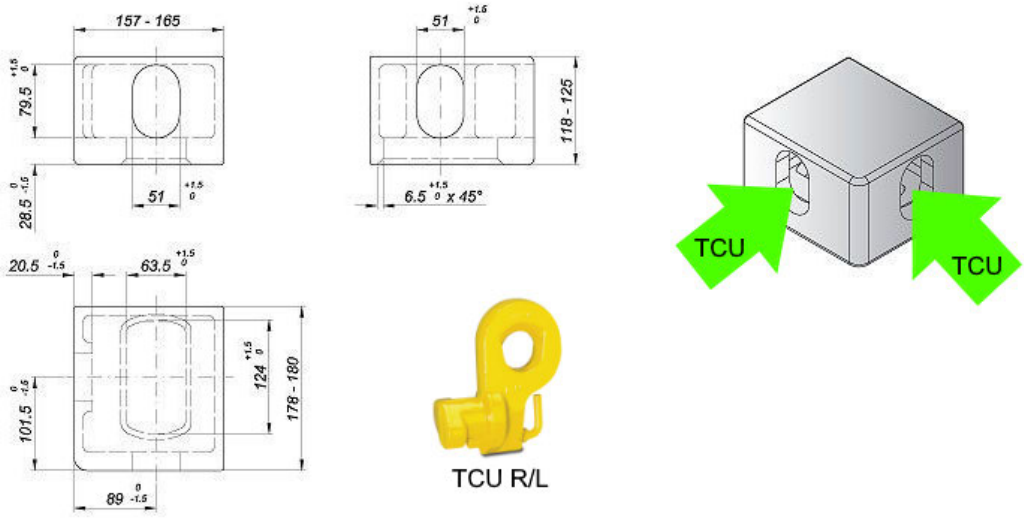


The stability of the load and structural strength of the ISO container during the loading and unloading operation is the responsibility of the operator, taking into consideration the centre of gravity of the load, the load distribution throughout the container and the environmental conditions prevailing whilst the lifting operation is being carried out.

Other lifting configurations/methods with container lugs can be suitable, but are fully on the responsibility of the operator.

General remarks :

Damaged lifting equipment, incorrect use, overloading can lead to serious accidents.
Always check the lifting equipment before each lifting operation.
Consult the instructions for use and respective WLL lifting tables before use.
The user must have the necessary competence in general lifting operations
The user has knowledge of the operation, application and technical properties of the used lifting equipment
(lifting angles, loads in the load-bearing lengths, sharp edges, shocks, environmental influences, etc.)
All our recommendations and / or calculations are never binding and do not belong to our liability.

# CONTAINER LIFTING

1. Spreader Beam adds stablity & safety

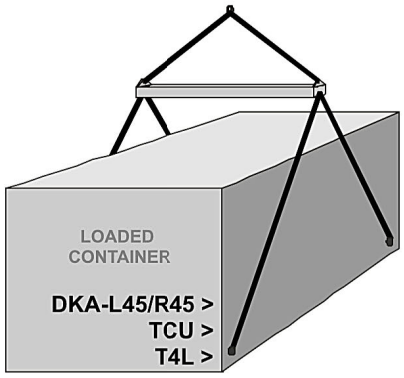


Container Lugs can be used in the top fittings

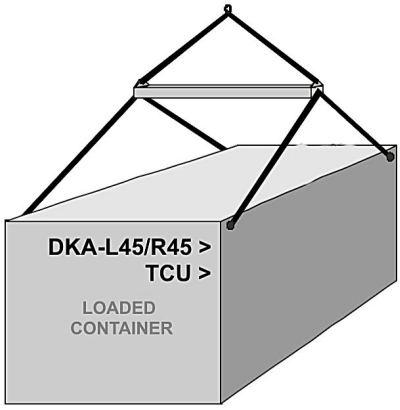


Un-symmetrically loaded containers
can be lifted by using
shortining devices in the Lifting slings

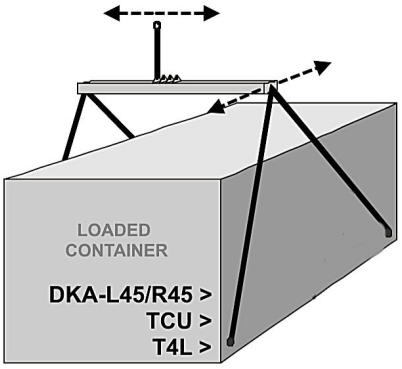


1. Spreader Frame with bottom side

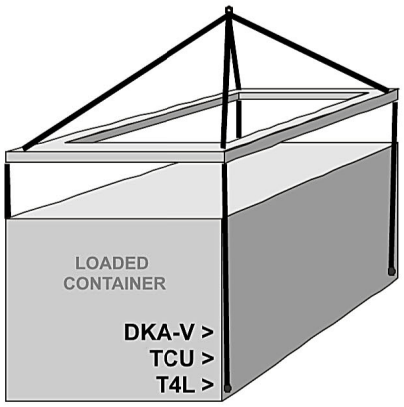


2. Speader Frame with top side

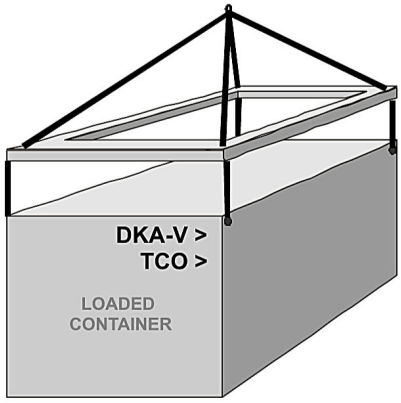


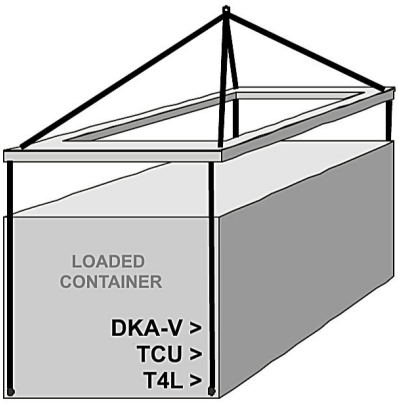


**NOT RECOMMENDED USE**

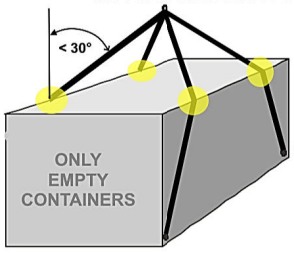


EDGE LOADING

Appropriate measures should also be taken to protect synthetic slings in case of contact with the corners of the container

Compression stress at contact points on side rail can damage container

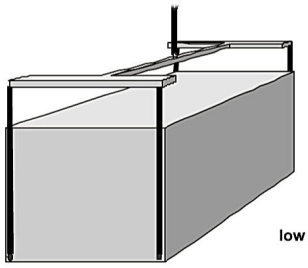

low stability

**UN-SAFE | DO NOT USE**

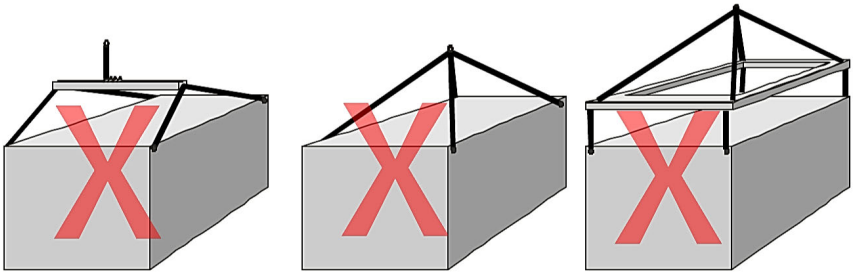

**Damaged lifting equipment, incorrect use, overloading can lead to serious accidents.**
**Always check the lifting equipment before each lifting operation.**
**Consult the instructions for use and respective WLL lifting tables before use.**
**The user must have the necessary competence in general lifting operations**
**The user has knowledge of the operation, application and technical properties of the used lifting equipment**
**(lifting angles, loads in the load-bearing lengths, sharp edges, shocks, environmental influences, etc.)**
**All our recommendations and / or calculations are never binding and do not belong to our liability.**

## ISO- containerhaak. / ISO- Anneau pour container / ISO- containerhook / ISO- containerhaak

**Type DKA**

| Hijsrichting<br>Direction de levage<br>Lifting direction<br>Hebe-richtung | | WLL<br>CMU<br>[t] | K<br>mm | E<br>mm | F<br>mm | T<br>mm | G<br>mm | H<br>mm | Kg | Art.NR<br>Code Art.<br>Stock No.<br>Art.Nr. | € |
|---|---|---|---|---|---|---|---|---|---|---|---|
| Verticaal-Vertical<br>Vertical-Vertikal | **DKA-V** | 12.50 | 192 | 70 | 45 | 25 | 75 | 48 | 4.0 | 09050004 | |
| 45°<br>Links-à gauche<br>Left-Links | **DKA-L45** | 12.50 | 192 | 70 | 45 | 25 | 75 | 48 | 4.0 | 09050003 | |
| 45°<br>Rechts-à droite<br>Right-Rechts | **DKA-R45** | 12.50 | 192 | 70 | 45 | 25 | 75 | 48 | 4.0 | 09050005 | |

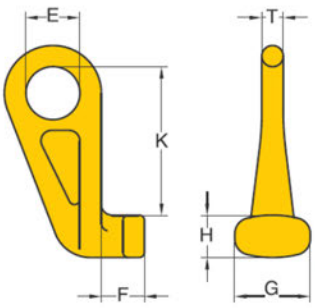




## ISO-Containerhaak met vergrendeling / Crochet ISO container avec bloccage / ISO-Containerlug with locking device / ISO-Container-Transport öse

**Type TCU**

| Nominale maat<br>Désignation<br>Nominal size<br>Nenngrösse | WLL<br>CMU<br>[t]<br>set of 4pcs . | A<br>mm | B<br>mm | C<br>mm | D<br>mm | E<br>mm | F<br>mm | G<br>mm | Kg | Art.NR<br>Code Art.<br>Stock No.<br>Art.Nr. | € |
|---|---|---|---|---|---|---|---|---|---|---|---|
| TCU32 | 32[t]-50° | 152 | 181 | 45 | 37 | 73 | 75 | 40 | 20 | 556927 | |
| TCU40 | 40[t]–36° | 152 | 181 | 45 | 37 | 73 | 75 | 40 | 20 | 556927 | |



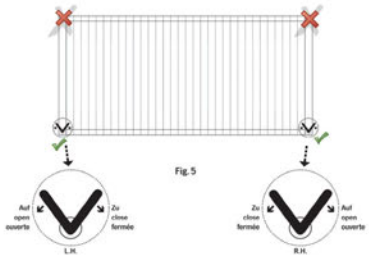


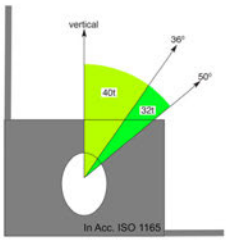


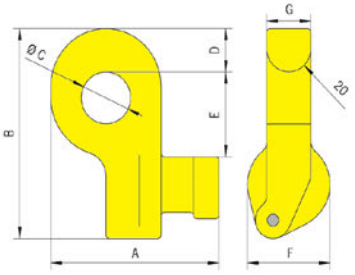


**Bottom Side Lifting**
**with set of 4 Lugs – 2x LH / 2x RH**
**Only for Corner Casting ISO 1161**

## ISO-Containerhaak met vergrendeling / Crochet ISO container avec bloccage / ISO-Containerlug with locking device / ISO Container-Transport öse

**Type TCO**

| Nominale maat<br>Désignation<br>Nominal size<br>Nenngrösse | WLL<br>CMU<br>[t]<br>set/4pcs . | A<br>mm | B<br>mm | C<br>mm | D<br>mm | E<br>mm | F<br>mm | G<br>mm | Kg | Art.NR<br>Code Art.<br>Stock No.<br>Art.Nr. | € |
|---|---|---|---|---|---|---|---|---|---|---|---|
| TCO56 | 56[t]- 0° | 123 | 217 | 45 | 39 | 57 | 101 | 121 | 30 | 556965 | |



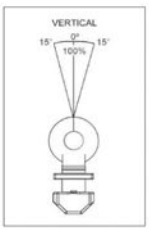


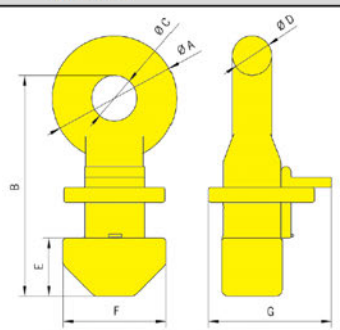


**Top Lifting with set of 4 Lugs**
**Only for Corner Casting ISO 1161**

www.DECORLUX.be
HIJSTECHNIEK
TECHNIQUE LEVAGE
HEBETECHNIK
LIFTING TECHNICS

## ISO-Containerhaak Universeel Type T4L | Crochet ISO container Universel Type T4L | ISO-Containerlug Universal Type T4L | Container-Transport öse Universal Type T4L








Rack Storage









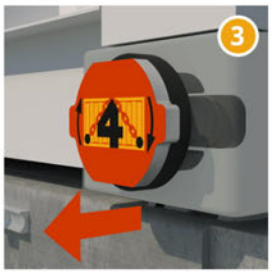





| Type | WLL CMU Each | WLL CMU Set of 4 Pcs | | Lifting configuration | Art.NR Code Art. Stock No. Art.Nr. | € |
|---|---|---|---|---|---|---|
| T4L10 | 10[t] | 40[t] | | Bottom Side Lifting in set of 4 Lugs - (Incl. Storage Rack) | T4L10 | |
| T4L14 | 14[t] | 56[t] | | Bottom Side Lifting in set of 4 Lugs - (Incl. Storage Rack) | T4L14 | |
| T4L10SP15 | | | | Spacer for T4L10 – 15mm | T4L10SP15 | |

Only suitable for Corner Casting ISO 1161 /

## Container/Gieterijhaak met oog Type WOX | Crochet de fonderie à œil Type WOX | Eye foundry hook Type WOX | Container/ weitmaulhaken mit ose Type WOX

| Nominale maat Désignation Nominal size Nenngrösse | WLL CMU [t] | A mm | D mm | G mm | H mm | O mm | R mm | Kg | Art.NR Code Art. Stock No. Art.Nr. | € |
|---|---|---|---|---|---|---|---|---|---|---|
| 6-8 | 1.12 | 53 | 11 | 22 | 26 | 15 | 102 | 0.61 | WOX8CY06 | |
| 7/8-8 | 2.00 | 62 | 13 | 25 | 29 | 24 | 128 | 0.92 | WOX8CY08 | |
| 10-8 | 3.15 | 76 | 14 | 23 | 30 | 32 | 150 | 1.77 | WOX8CY10 | |
| 13-8 | 5.30 | 89 | 17 | 38 | 40 | 27 | 173 | 2.82 | WOX8CY13 | |
| 16-8 | 8.00 | 102 | 24 | 45 | 48 | 47 | 210 | 5.03 | WOX8CY16 | |
| 20-8 | 12.50 | 114 | 28 | 54 | 60 | 56 | 260 | 7.6 | WOX8CY20 | |
| 22-8 | 15.00 | 127 | 32 | 65 | 69 | 47 | 265 | 13.78 | WOX8GH22 | |
| 26-8 | 21.20 | 136 | 34 | 72 | 80 | 54 | 305 | 19.21 | WOX8GH26 | |
| 32-8 | 31.50 | 165 | 37 | 83 | 95 | 60 | 327 | 24.8 | WOX8GH32 | |

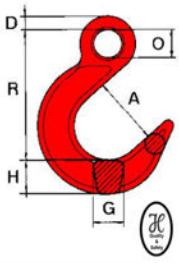


## Container/Gieterijhaak met gaffel Type CWGX | Crochet de fonderie à chappe Type CWGX | Clevis foundry hook Type CWGX | Container/ weitmaulhaken mit gabel Type CWGX

| Nominale maat Désignation Nominal size Nenngrösse | WLL CMU [t] | A mm | B mm | C mm | G mm | H mm | R mm | Kg | Art.NR Code Art. Stock No. Art.Nr. | € |
|---|---|---|---|---|---|---|---|---|---|---|
| 6-8 | 1.12 | 53.5 | 8.5 | 6.5 | 22 | 26 | 91 | 0.70 | CWGX8CYF06 | |
| 7/8-8 | 2.00 | 64 | 10 | 11.5 | 26 | 31 | 120.4 | 1.10 | CWGX8CYF08 | |
| 10-8 | 3.15 | 76 | 13 | 15 | 30 | 34 | 131 | 1.70 | CWGX8CYF10 | |
| 13-8 | 5.30 | 89 | 17 | 17.5 | 40 | 44.5 | 148 | 3.60 | CWGX8CYF13 | |
| 16-8 | 8.00 | 101 | 19 | 21.5 | 45 | 50.5 | 198.5 | 5.60 | CWGX8CYF16 | |

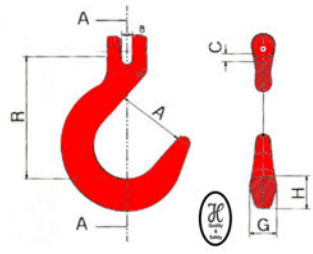


www.DECORLUX.be
HIJSTECHNIEK TECHNIQUE LEVAGE
HEBETECHNIK LIFTING TECHNICS

# DxL-TPK-A

## Lifting beam for ISO- containers

load WLL **16-30,5 t**

20ft 40ft

CE Declaration of conformity 2006/42/EC manufactured according to Directive Made in EU

20 000 max. no. of work cycles | endurance test 100% according to EN 13155 | EN 13155 meets the Standard

- Has a rating plate with: manufacturer's mark, CE mark, lifting capacity, factory number, year of production, size and weight
- Fixed working spacing
- Lifting beam sold with four single-leg chain or steel rope slings with KE-type hooks

### Top mounting

- eye welded to the supporting beam
- rounded working edges
- strengthening ribs

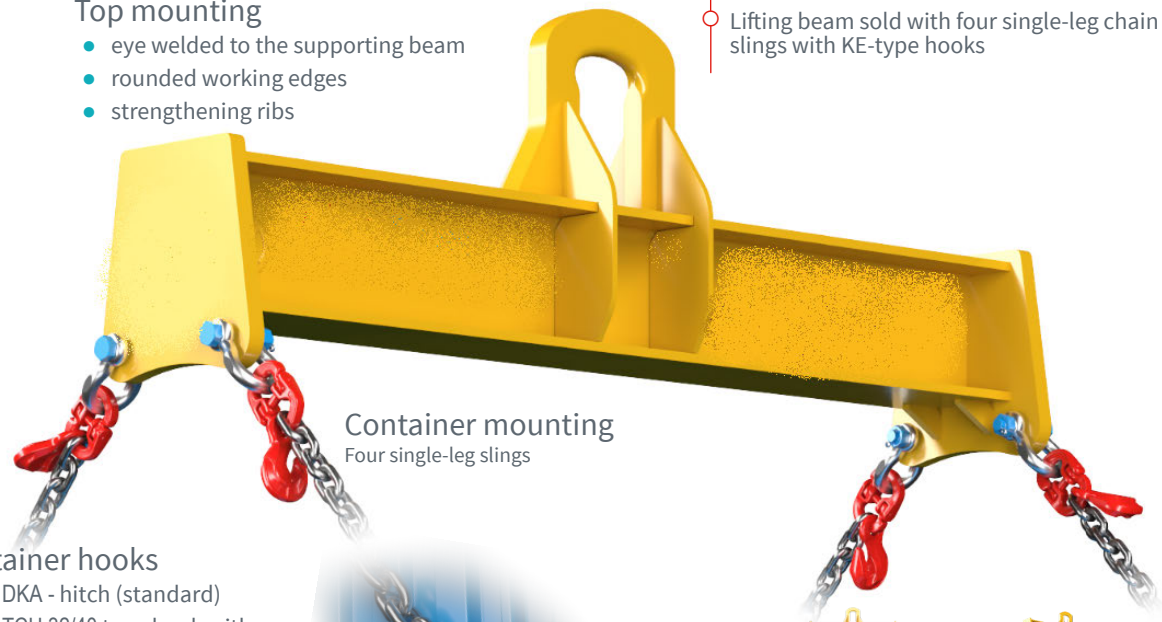

### Container mounting

Four single-leg slings

### Container hooks

- 4x DKA - hitch (standard)
- 4x TCU 32/40 type hook with protection against falling out (option)



TCU



DKA

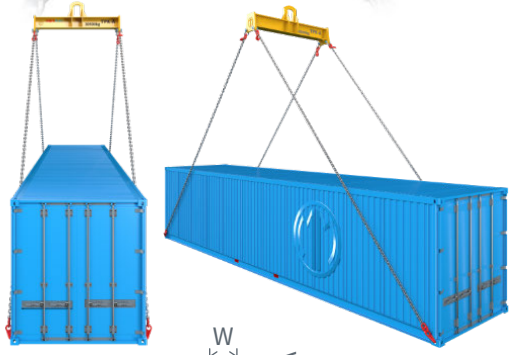

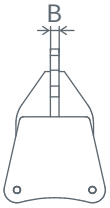


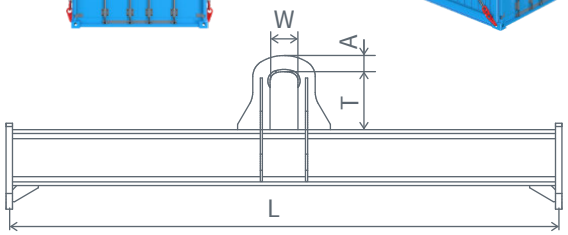


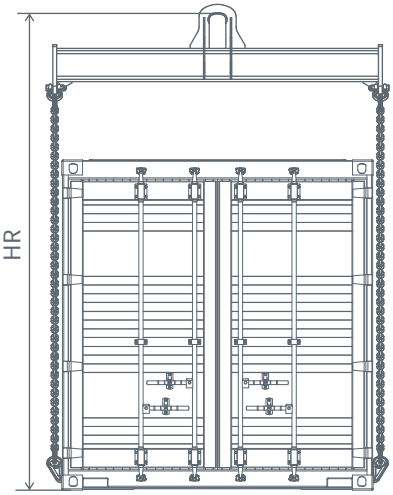


| Code | WLL [kg] | container | sling type | L [mm] | T [mm] | W [mm] | A [mm] | B [mm] | HR [mm] | Mass [kg] |
|---|---|---|---|---|---|---|---|---|---|---|
| **TPK-A 16-20 RS** | 16 000 | 20'/20'HC | wirerope sling | 2 550 | 270 | 130 | 75 | 40 | 3 800 | 436 |
| **TPK-A 16-20 CS** | 16 000 | 20'/20'HC | chain sling | 2 550 | 270 | 130 | 75 | 40 | 3 800 | 475 |
| **TPK-A 16-40 RS** | 16 000 | 40'/40'HC | wirerope sling | 2 550 | 270 | 130 | 75 | 40 | 7 100 | 473 |
| **TPK-A 16-40 CS** | 16 000 | 40'/40'HC | chain sling | 2 550 | 270 | 130 | 75 | 40 | 7 100 | 566 |
| **TPK-A 16-20/40 CS** | 16 000 | 40' i 20' | chain sling | 2 550 | 270 | 130 | 75 | 40 | 7 100 | 575 |
| **TPK-A 24-20 RS** | 24 000 | 20'/20'HC | wirerope sling | 2 550 | 350 | 150 | 90 | 50 | 3 900 | 605 |
| **TPK-A 24-20 CS** | 24 000 | 20'/20'HC | chain sling | 2 550 | 350 | 150 | 90 | 50 | 3 900 | 597 |
| **TPK-A 24-40 RS** | 24 000 | 40'/40'HC | wirerope sling | 2 550 | 350 | 150 | 90 | 50 | 7 200 | 670 |
| **TPK-A 24-40 CS** | 24 000 | 40'/40'HC | chain sling | 2 550 | 350 | 150 | 90 | 50 | 7 200 | 673 |
| **TPK-A 24-20/40 CS** | 24 000 | 40' i 20' | chain sling | 2 550 | 350 | 150 | 90 | 50 | 7 200 | 682 |
| **TPK-A 30.5-20 RS** | 30 500 | 20'/20'HC | wirerope sling | 2 550 | 370 | 200 | 105 | 60 | 4 100 | 780 |
| **TPK-A 30.5 -20 CS** | 30 500 | 20'/20'HC | chain sling | 2 550 | 370 | 200 | 105 | 60 | 4 100 | 745 |
| **TPK-A 30.5-40 RS** | 30 500 | 40'/40'HC | steel rope | 2 550 | 370 | 200 | 105 | 60 | 7 300 | 850 |
| **TPK-A 30.5-40 CS** | 30 500 | 40'/40'HC | chain sling | 2 550 | 370 | 200 | 105 | 60 | 7 300 | 878 |
| **TPK-A 30.5-20/40 CS** | 30 500 | 40' i 20' | chain sling | 2 550 | 370 | 200 | 105 | 60 | 7 300 | 895 |

# DxL-TPK-B

## Spreader beam for ISO-container

load WLL **16-30,5 t** | 20ft | 40ft

CE Declaration of conformity 2006/42/EC manufactured according to Directive | Made in EU

20 000 max. no. of work cycles | endurance test 100% according to EN 13155 | EN 13155 meets the Standard

- Has a rating plate with: manufacturer's mark, CE mark, lifting capacity, factory number, year of production, size and weight
- Fixed working spacing
- Lifting beam sold with four single-leg chain or steel rope slings with KE-type hooks

### Top mounting

- 2-leg chain or steel rope sling with a link

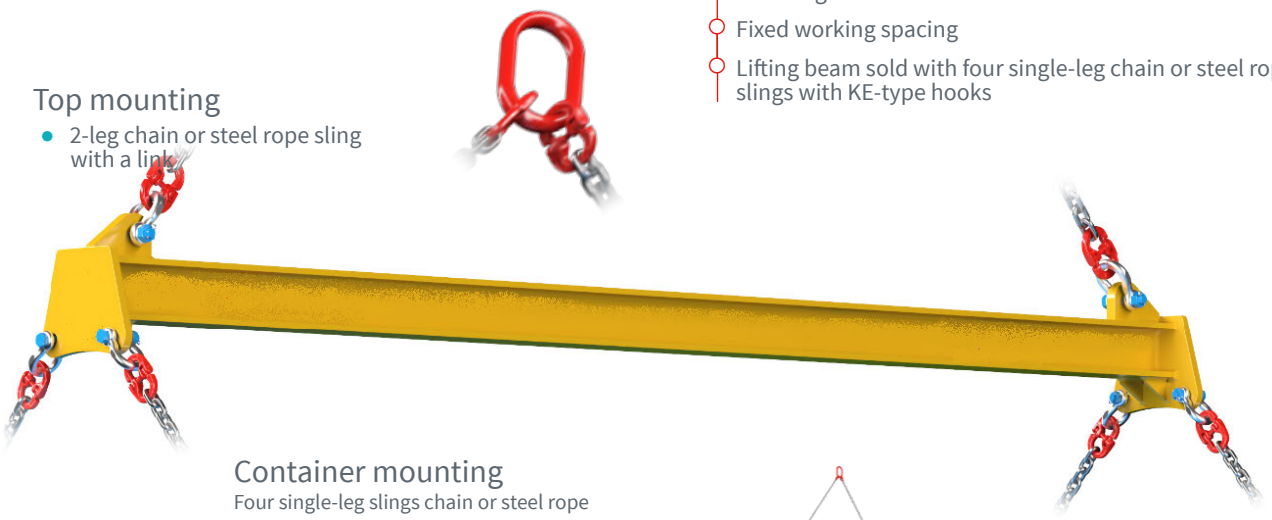

### Container mounting

Four single-leg slings chain or steel rope



TCU



DKA



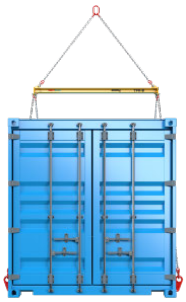

### Container hooks

- 4x DKA - hitch (standard)
- 4x TCU 32/40 type hook with protection against falling out (option)

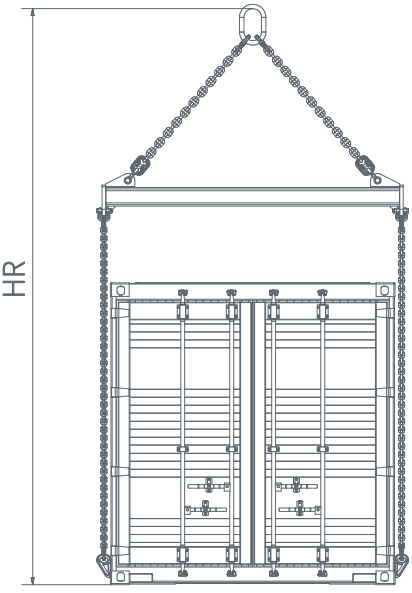


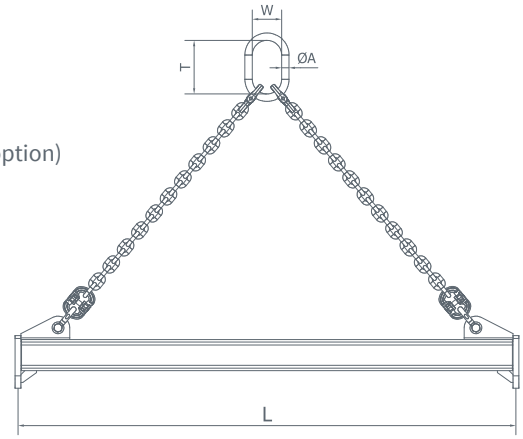




| Code | WLL [kg] | container | sling type | L [mm] | T [mm] | W [mm] | A [mm] | HR [mm] | Mass [kg] |
|---|---|---|---|---|---|---|---|---|---|
| TPK-B 16-20 RS | 16 000 | 20'/20'HC | wirerope sling | 2 550 | 275 | 150 | 38 | 4 700 | 345 |
| TPK-B 16-20 CS | 16 000 | 20'/20'HC | chain sling | 2 550 | 275 | 150 | 38 | 4 700 | 320 |
| TPK-B 16-40 RS | 16 000 | 40'/40'HC | wirerope sling | 2 550 | 275 | 150 | 38 | 7 800 | 390 |
| TPK-B 16-40 CS | 16 000 | 40'/40'HC | chain sling | 2 550 | 275 | 150 | 38 | 7 800 | 406 |
| TPK-B 16 CS | 16 000 | 40' / 20' | chain sling | 2 550 | 275 | 150 | 38 | 7 800 | 415 |
| TPK-B 24-20 RS | 24 000 | 20'/20'HC | wirerope sling | 2 550 | 260 | 140 | 36 | 4 900 | 560 |
| TPK-B 24-20 CS | 24 000 | 20'/20'HC | chain sling | 2 550 | 260 | 140 | 36 | 4 900 | 425 |
| TPK-B 24-40 RS | 24 000 | 40'/40'HC | wirerope sling | 2 550 | 260 | 140 | 36 | 7 900 | 630 |
| TPK-B 24-40 CS | 24 000 | 40'/40'HC | chain sling | 2 550 | 260 | 140 | 36 | 7 900 | 500 |
| TPK-B 24-20/40 CS | 24 000 | 40' / 20' | łańcuchowe | 2 550 | 260 | 140 | 36 | 7 900 | 510 |
| TPK-B 30.5-20 RS | 30 500 | 20'/20'HC | wirerope sling | 2 550 | 350 | 190 | 50 | 5 000 | 740 |
| TPK-B 30.5-20 CS | 30 500 | 20'/20'HC | chain sling | 2 550 | 350 | 190 | 50 | 5 000 | 600 |
| TPK-B 30.5-40 RS | 30 500 | 40'/40'HC | wirerope sling | 2 550 | 350 | 190 | 50 | 8 000 | 815 |
| TPK-B 30.5-40 CS | 30 500 | 40'/40'HC | chain sling | 2 550 | 350 | 190 | 50 | 8 000 | 753 |
| TPK-B 30.5-20/40 CS | 30 500 | 40' / 20' | chain sling | 2 550 | 350 | 190 | 50 | 8 000 | 770 |

# DxL-TPK-C

## Lifting beam for ISO-container

load WLL 30,5 t | 20ft | 40ft

CE Declaration of conformity 2006/42/EC manufactured according to Directive | Made in EU

20 000 max. no. of work cycles | endurance test 100% according to EN 13155 | EN 13155 meets the Standard

- Has a rating plate with: manufacturer's mark, CE mark, lifting capacity, factory number, year of production, size and weight
- Lifting beam sold with four single-leg chain or steel rope slings with KE-type hooks and a BX type upper shackle

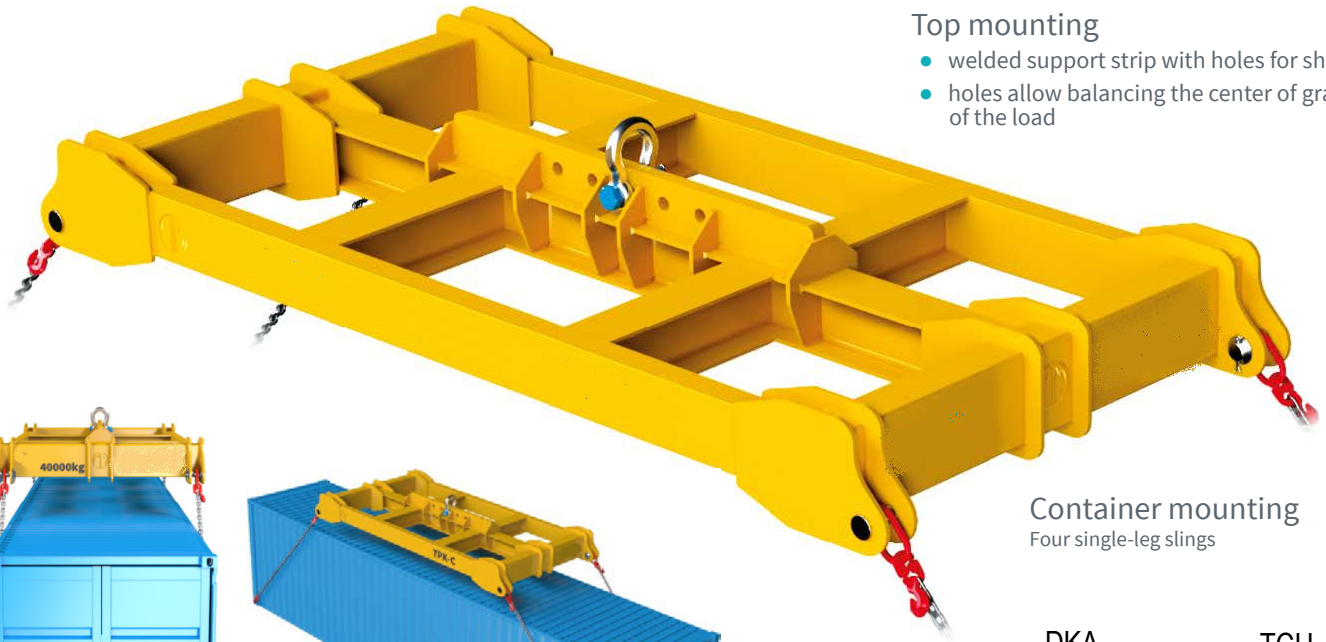

### Top mounting

- welded support strip with holes for shackles
- holes allow balancing the center of gravity of the load







### Container mounting

Four single-leg slings

DKA



TCU

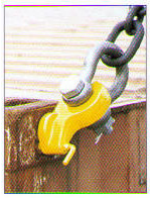

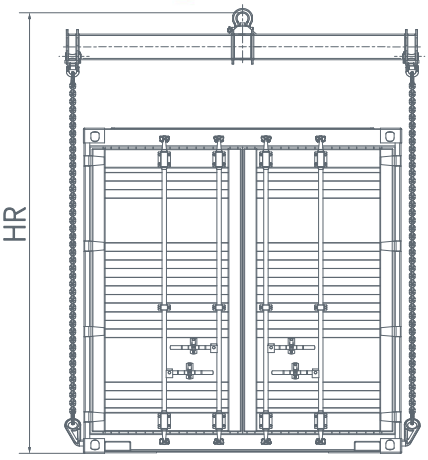


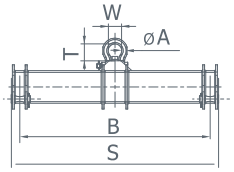


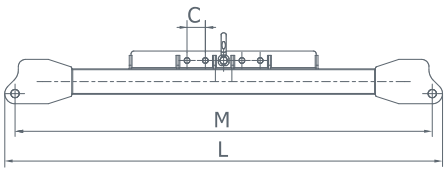


### Container hooks

- 4x DKA - hitch (standard)
- 4x TCU 32/40 type hook with protection against falling out (option)

| Code | DOR [kg] | contaier | sling type | L [mm] | M [mm] | C [mm] | S [mm] | B [mm] | T [mm] | W [mm] | A [mm] | HR [mm] | Mass [kg] |
|---|---|---|---|---|---|---|---|---|---|---|---|---|---|
| **TPK-C 16-20 RS** | 16 000 | 20'/20'HC | wirerope sling | 2 750 | 2600 | 100 | 1770 | 1 660 | 97 | 98,5 | 41 | 4529 | 750 |
| **TPK-C 16-20 CS** | 16 000 | 20'/20'HC | chain sling | 2 750 | 2600 | 100 | 1770 | 1 660 | 97 | 98,5 | 41 | 4529 | 815 |
| **TPK-C 16-20/40 CS** | 16 000 | 40' / 20' | chain sling | 2 750 | 2600 | 100 | 1770 | 1 660 | 97 | 98,5 | 41 | 6594 | 920 |
| **TPK-C 24-20 RS** | 24 000 | 20'/20'HC | wirerope sling | 2 780 | 2600 | 100 | 1680 | 1 500 | 119 | 125 | 57 | 4555 | 1094 |
| **TPK-C 24-20 CS** | 24 000 | 20'/20'HC | chain sling | 2 750 | 2600 | 100 | 1680 | 1 500 | 119 | 125 | 57 | 4555 | 1070 |
| **TPK-C 24-20/40 CS** | 24 000 | 40' / 20' | chain sling | 2 780 | 2600 | 100 | 1680 | 1 500 | 124 | 125 | 57 | 8045 | 1140 |
| **TPK-C 30.5-20 RS** | 30 500 | 20'/20'HC | wirerope sling | 2 800 | 2600 | 125 | 1700 | 1 500 | 116 | 142 | 57 | 4500 | 1252 |
| **TPK-C 30.5-20 CS** | 30 500 | 20'/20'HC | chain sling | 2 800 | 2600 | 125 | 1700 | 1 500 | 116 | 142 | 57 | 4500 | 1225 |
| **TPK-C 30.5-20/40 CS** | 30 500 | 40' / 20' | chain sling | 2 800 | 2600 | 130 | 1990 | 1 840 | 124 | 142 | 57 | 8440 | 1425 |

# DxL-TPK-D

## Lifting beam for cargo containers

CE Declaration of conformity 2006/42/EC manufactured according to Directive — Made in EU

20 000 max. no. of work cycles — endurance test 100% according to EN 13155 — EN 13155 meets the Standard

load WLL **16-30,5 t** — 20ft — 40ft

- Has a rating plate with: manufacturer's mark, CE mark, lifting capacity, factory number, year of production, size and weight
- sold with a 4-leg chain sling or steel rope sling with a collecting link
- Equipped with bumpers positioning the traverse in relation to the container, an automatic system for opening and closing bayonet hooks, and a system of indicators determining the position of each bayonet hook

### Top mounting

- 4-leg chain or steel rope sling with a collecting link
- 4x welded lifting point

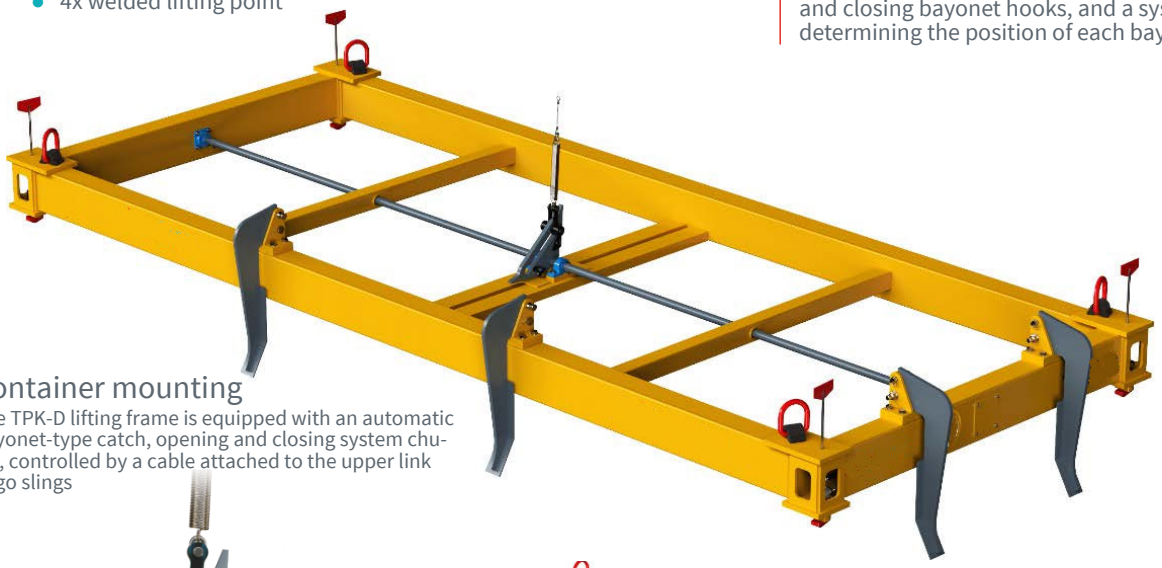

### Container mounting

The TPK-D lifting frame is equipped with an automatic bayonet-type catch, opening and closing system chutes, controlled by a cable attached to the upper link nego slings



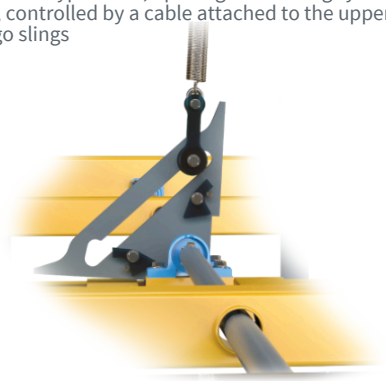







When lifting, the rope tie attached to the sling activates the bayonet rotation mechanism in the container's carrying handles.

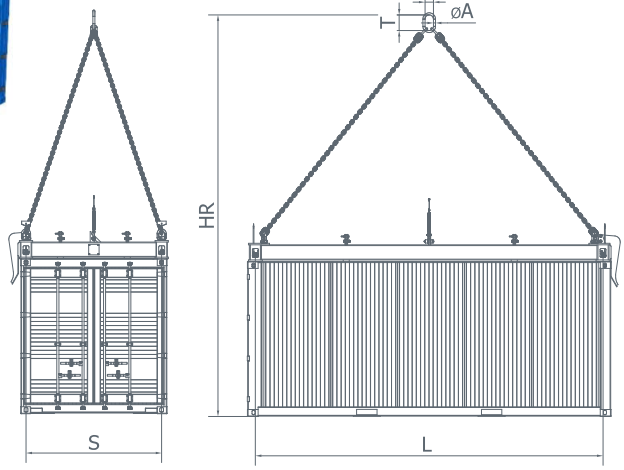


| Code | WLL [kg] | container | sling type | L [mm] | S [mm] | A [mm] | W [mm] | T [mm] | HR [mm] | Mass [kg] |
|---|---|---|---|---|---|---|---|---|---|---|
| **TPK-D 16-20 RS** | 16 000 | 20'/20'HC | wirerope sling | 5 852 | 2 260 | 38 | 150 | 275 | 6 300 | 1 300 |
| **TPK-D 16-20 CS** | 16 000 | 20'/20'HC | chain sling | 5 852 | 2 260 | 38 | 150 | 275 | 6 300 | 1 300 |
| **TPK-D 16-40 RS** | 16 000 | 40'/40'HC | wirerope sling | 11 987 | 2 260 | 38 | 150 | 275 | 10 000 | 2 000 |
| **TPK-D 16-40 CS** | 16 000 | 40'/40'HC | chain sling | 11 987 | 2 260 | 38 | 150 | 275 | 10 000 | 2 000 |
| **TPK-D 30.5-20 RS** | 30 500 | 20'/20'HC | wirerope sling | 5 852 | 2 260 | 50 | 190 | 350 | 6 300 | 1 800 |
| **TPK-D 30.5-20 CS** | 30 500 | 20'/20'HC | chain sling | 5 852 | 2 260 | 50 | 190 | 350 | 6 300 | 1 800 |
| **TPK-D 30.5-40 RS** | 30 500 | 40'/40'HC | wirerope sling | 11 987 | 2 260 | 50 | 800 | 100 | 10 000 | 3 000 |
| **TPK-D 30.5-40 CS** | 30 500 | 40'/40'HC | chain sling | 11 987 | 2 260 | 50 | 800 | 100 | 10 000 | 3 000 |

DECORLUX
HIJSTECHNIEK
TECHNIQUE LEVAGE
HEBETECHNIK
LIFTING TECHNICS




# Lifting beams for BIG-BAGS

# DxL-TBB-A BIG-BAG lifting beam

CE Declaration of conformity 2006/42/EC manufactured according to Directive Made in EU

20 000 max. no. of work cycles | endurance test 100% according to EN 13155 | EN 13155 meets the Standard

1-2 t -lifting capacity (WLL)
750/800/900/1000/1150 mm - BIG-BAG size

- Designed for carrying industrial FIBC containers (BIG-BAG, JUMBO, super sack, tonne bag) with belt slings
- The TBB-A lifting beam allows unloading of bags with a lower discharge hopper or an opening bottom



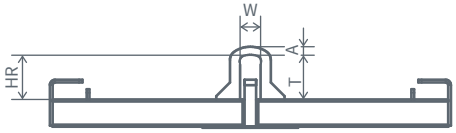


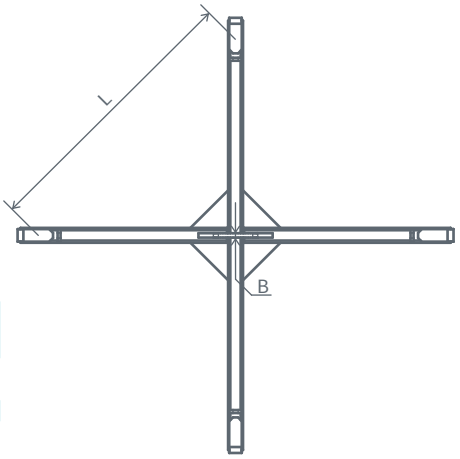


| Code | WLL [kg] | L [mm] | T [mm] | W [mm] | A [mm] | B [mm] | HR [mm] | BIG-BAG size [mm] | Mass [kg] |
|---|---|---|---|---|---|---|---|---|---|
| TBB-A 1-0.75 | 1 000 | 750 | 130 | 60 | 25 | 12 | 130 | 750x750, 800x800 | 20 |
| TBB-A 1-0.90 | 1 000 | 900 | 130 | 60 | 25 | 12 | 130 | 900x900, 1000x1000 | 22 |
| TBB-A 1-1.05 | 1 000 | 1050 | 130 | 60 | 25 | 12 | 130 | 1050x1050, 1150x1150 | 26 |
| TBB-A 2-0.75 | 2 000 | 750 | 160 | 75 | 35 | 15 | 160 | 750x750, 800x800 | 33 |
| TBB-A 2-0.90 | 2 000 | 900 | 160 | 75 | 35 | 15 | 160 | 900x900,1000x1000 | 38 |
| TBB-A 2-1.05 | 2 000 | 1 050 | 160 | 75 | 35 | 15 | 160 | 1050x1050, 1150x1150 | 42 |

# DxL-TBB-B BIG-BAG lifting beam

CE Declaration of conformity 2006/42/EC manufactured according to Directive Made in EU

20 000 max. no. of work cycles | endurance test 100% according to EN 13155 | EN 13155 meets the Standard

1-2 t -lifting capacity (WLL)
750/800/900/1000/1150 mm -BIG-BAG size

- Designed for carrying industrial FIBC containers (BIG-BAG, JUMBO, super sack, tonne bag) with belt slings
- The TBB-B lifting beam allows unloading of bags with a lower discharge hopper or an opening bottom



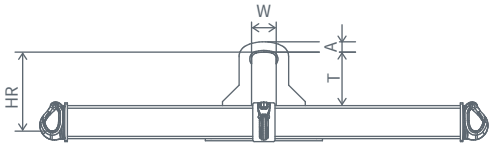


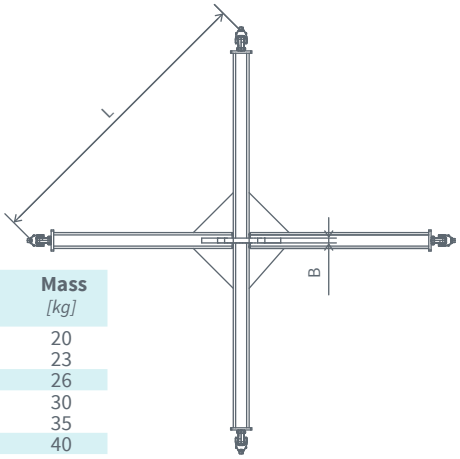


| Code | WLL [kg] | L [mm] | T [mm] | W [mm] | A [mm] | B [mm] | HR [mm] | BIG-BAG size [mm] | Mass [kg] |
|---|---|---|---|---|---|---|---|---|---|
| TBB-B 1-0.75 | 1 000 | 750 | 130 | 60 | 25 | 12 | 187 | 750x750, 800x800 | 20 |
| TBB-B 1-0.90 | 1 000 | 900 | 130 | 60 | 25 | 12 | 187 | 900x900, 1000x1000 | 23 |
| TBB-B 1-1.05 | 1 000 | 1050 | 130 | 60 | 25 | 12 | 187 | 1050x1050, 1150x1150 | 26 |
| TBB-B 2-0.75 | 2 000 | 750 | 160 | 75 | 35 | 15 | 222 | 750x750, 800x800 | 30 |
| TBB-B 2-0.90 | 2 000 | 900 | 160 | 75 | 35 | 15 | 222 | 900x900,1000x1000 | 35 |
| TBB-B 2-1.05 | 2 000 | 1050 | 160 | 75 | 35 | 15 | 222 | 1050x1050, 1150x1150 | 40 |

# DxL-TBB-INOX

## Stainless steel lifting beam for BIG-BAG containers

CE Declaration of conformity 2006/42/EC manufactured according to Directive — Made in EU

20 000 max. no. of work cycles — endurance test 100% according to EN 13155 — EN 13155 meets the Standard

1-2 t -lifting capacity (WLL)
750/800/900/1000/1050/1150 mm BIG-BAG size

- Designed for carrying industrial FIBC containers (BIG-BAG, JUMBO, super sack, tonne bag) with belt slings
- The TBB-INOX lifting beam allows unloading of bags with a lower discharge hopper or an opening bottom

INOX

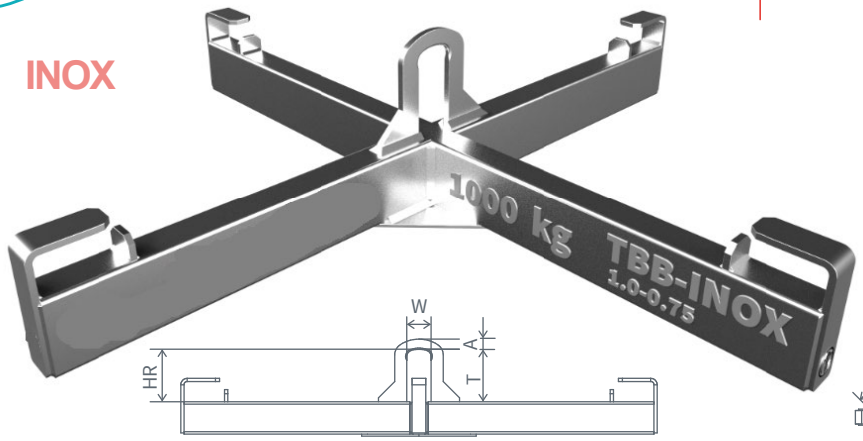


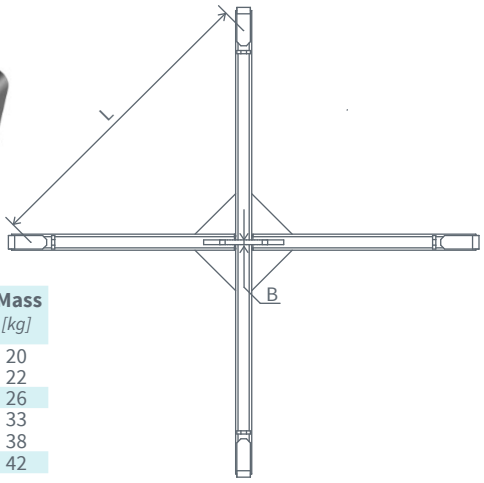


| Code | WLL [kg] | L [mm] | T [mm] | W [mm] | A [mm] | B [mm] | HR [mm] | BIG-BAG size [mm] | Mass [kg] |
|---|---|---|---|---|---|---|---|---|---|
| TBB-INOX 1-0,75 | 1 000 | 750 | 130 | 60 | 25 | 12 | 130 | 750x750, 800x800 | 20 |
| TBB-INOX 1-0,90 | 1 000 | 900 | 130 | 60 | 25 | 12 | 130 | 900x900, 1000x1000 | 22 |
| TBB-INOX 1-1,05 | 1 000 | 1050 | 130 | 60 | 25 | 12 | 130 | 1050x1050, 1150x1150 | 26 |
| TBB-INOX 2-0,75 | 2 000 | 750 | 160 | 75 | 35 | 15 | 160 | 750x750, 800x800 | 33 |
| TBB-INOX 2-0,90 | 2 000 | 900 | 160 | 75 | 35 | 15 | 160 | 900x900, 1000x1000 | 38 |
| TBB-INOX 2-1,05 | 2 000 | 1 050 | 160 | 75 | 35 | 15 | 160 | 1050x1050, 1150x1150 | 42 |

# DxL-TBB-R

## Lifting beam for BIG-BAG containers

CE Declaration of conformity 2006/42/EC manufactured according to Directive — Made in EU

20 000 max. no. of work cycles — endurance test 100% according to EN 13155 — EN 13155 meets the Standard

1-2 t -lifting capacity (WLL)
800/900/1150 mm -BIG-BAG size

- Designed for carrying industrial FIBC containers (BIG-BAG, JUMBO, super sack, tonne bag) with belt slings
- The TBB-R lifting beam allows unloading of bags with a lower discharge hopper or an opening bottom
- Adjustable arm length for bags 800/900/1050mm
- Lifting Beam with automatic hooks for lifting BIG-BAGs
- Lifting Beam equipped with a release cord. Pulling the rope releases all four hooks
- The standard length of the release cord is 5m

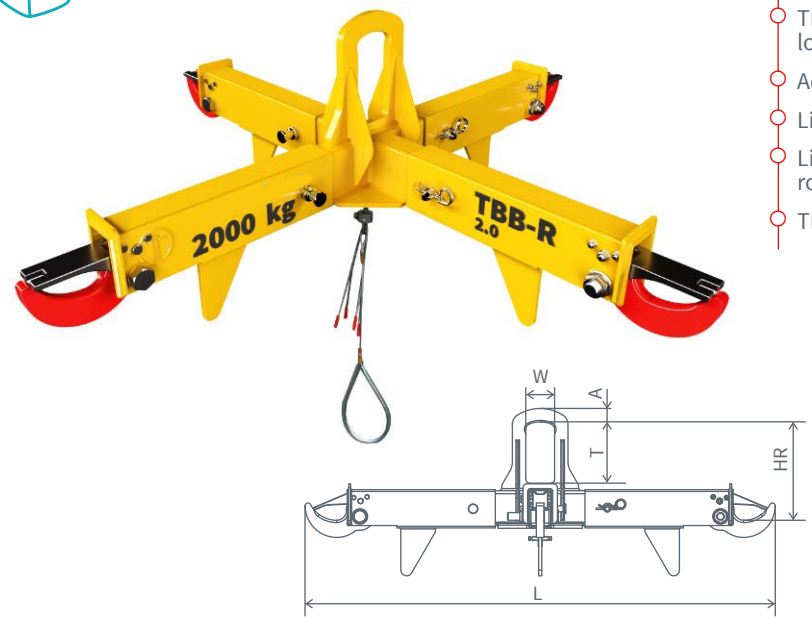


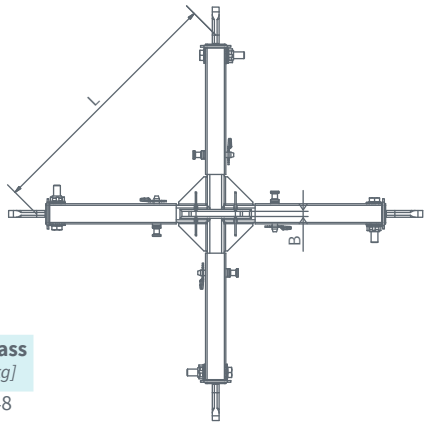


| Code | WLL [kg] | L [mm] | T [mm] | W [mm] | A [mm] | B [mm] | HR [mm] | BIG-BAG size [mm] | Mass [kg] |
|---|---|---|---|---|---|---|---|---|---|
| TBB-R 2.0 | 2 000 | 750/850/1000 | 160 | 75 | 35 | 15 | 257 | 800x800, 900x900, 1050x1050 | 48 |

## DxL-TBB-A PRV BIG-BAG lifting beam

Declaration of conformity 2006/42/EC manufactured according to Directive Made in EU

20 000 max. no. of work cycles | endurance test 100% according to EN 13155 | EN 13155 meets the Standard




- Designed for carrying industrial FIBC containers (BIG-BAG, JUMBO, super sack, tonne bag) with belt slings
- The TBB-A PRV lifting beam allows unloading of bags with a lower discharge hopper or an opening bottom

| Code | WLL [t] | BIG-BAG size [mm] | Mass [kg] |
|---|---|---|---|
| **TBB-A PRV 0.5-0.64** | 0,5 | 640x640 | 18 |

0,5 t -load capacity (WLL)
640x640 mm - BIG-BAG size

## DxL-TBB-B PRV BIG-BAG lifting beam

Declaration of conformity 2006/42/EC manufactured according to Directive Made in EU

20 000 max. no. of work cycles | endurance test 100% according to EN 13155 | EN 13155 meets the Standard




- Designed for carrying industrial FIBC containers (BIG-BAG, JUMBO, super sack, tonne bag) with belt slings
- The TBB-B PRV lifting beam allows unloading of bags with a lower discharge hopper or an opening bottom

| Code | WLL [t] | BIG-BAG size [mm] | Mass [kg] |
|---|---|---|---|
| **TBB-B PRV 1.0-0.5** | 1,0 | 500x500 | 15 |

1,0 t -load capacity (WLL)
500x500 mm - BIG-BAG size

## DxL-TBB-XB BIG-BAG lifting beam

Declaration of conformity 2006/42/EC manufactured according to Directive Made in EU

20 000 max. no. of work cycles | endurance test 100% according to EN 13155 | EN 13155 meets the Standard




- Designed for carrying industrial FIBC containers (BIG-BAG, JUMBO, super sack, tonne bag) with belt slings
- The TBB-XB lifting beam allows unloading of bags with a lower discharge hopper or an opening bottom

| Code | WLL [t] | BIG-BAG size [mm] | Mass [kg] |
|---|---|---|---|
| **TBB-XB 1.0-0.9** | 1,0 | 900x900 | 29 |
| **TBB-XB 1.0-1.0** | 1,0 | 1000x1000 | 29 |

1,0 t -load capacity (WLL)
900x900 1000x1000 mm -BIG-BAG size

## **DxL-TBB-DA** BIG-BAG lifting beam

CE Declaration of conformity 2006/42/EC manufactured according to Directive Made in EU

20 000 max. no. of work cycles | endurance test 100% according to EN 13155 | EN 13155 meets the Standard

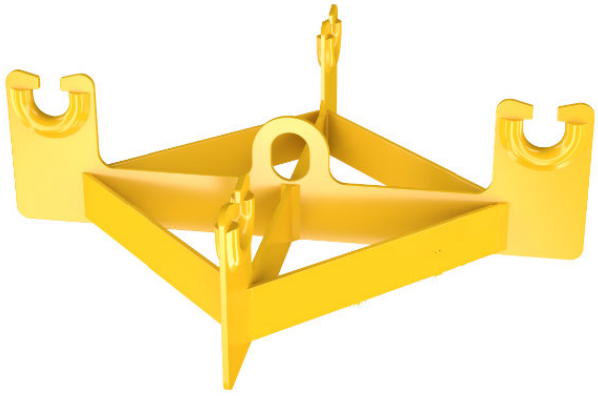

- Designed for carrying industrial FIBC containers (BIG-BAG, JUMBO, super sack, tonne bag) with belt slings
- The TBB-DA lifting beam allows unloading of bags with a lower discharge hopper or an opening bottom

| Code | WLL [t] | BIG-BAG size [mm] | Mass [kg] |
|---|---|---|---|
| **TBB-DA 1.5-0.54-0.45** | 1,5 | 540x450 | 29 |

1,5 t - load capacity (WLL)
540x450 mm - BIG-BAG size

## **DxL-TBB-EA** BIG-BAG lifting beam

CE Declaration of conformity 2006/42/EC manufactured according to Directive Made in EU

20 000 max. no. of work cycles | endurance test 100% according to EN 13155 | EN 13155 meets the Standard

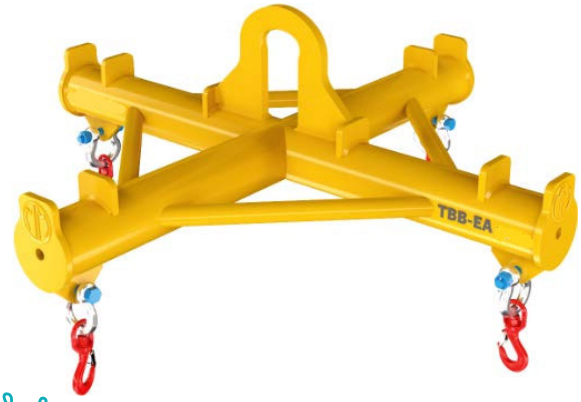


- Designed for carrying industrial FIBC containers (BIG-BAG, JUMBO, super sack, tonne bag) with belt slings
- The TBB-EA lifting beam allows unloading of bags with a lower discharge hopper or an opening bottom

| Code | WLL [t] | BIG-BAG size [mm] | Mass [kg] |
|---|---|---|---|
| **TBB-EA 1.0-0.83** | 1,0 | 830x830 | 33 |
| **TBB-EA 6.0-0.9** | 6,0 | 900x900 | 110 |

1,0 &6,0 t - load capacity (WLL)
830x830 i 900x900 mm - BIG-BAG size

## **DxL-TBB-FA** BIG-BAG lifting beam

CE Declaration of conformity 2006/42/EC manufactured according to Directive Made in EU

20 000 max. no. of work cycles | endurance test 100% according to EN 13155 | EN 13155 meets the Standard



- Designed for carrying industrial FIBC containers (BIG-BAG, JUMBO, super sack, tonne bag) with belt slings
- The TBB-FA lifting beam allows unloading of bags with a lower discharge hopper or an opening bottom

| Code | WLL [t] | BIG-BAG size [mm] | Mass [kg] |
|---|---|---|---|
| **TBB-FA 1.0-0.8** | 1,0 | 800x800 | 26 |

1,0 t - load capacity (WLL)
800x800 mm - BIG-BAG size

# DxL-TBB-KA BIG-BAG lifting beam

Declaration of conformity 2006/42/EC manufactured according to Directive Made in EU

20 000 max. no. of work cycles | endurance test 100% according to EN 13155 | EN 13155 meets the Standard



- Designed for carrying industrial FIBC containers (BIG-BAG, JUMBO, super sack, tonne bag) with belt slings
- The TBB-KA lifting beam allows unloading of bags with a lower discharge hopper or an opening bottom
- It is possible to suspend the entire load (WLL)on the rotating central hook

| Code | WLL [t] | BIG-BAG size [mm] | Mass [kg] |
|---|---|---|---|
| **TBB-KB 1.2-0.86** | 1,2 | 860x860 | 42 |

1,2 t - load capacity (WLL)
860x860 mm - BIG-BAG size

# DxL-TBB-KB BIG-BAG lifting beam

Declaration of conformity 2006/42/EC manufactured according to Directive Made in EU

20 000 max. no. of work cycles | endurance test 100% according to EN 13155 | EN 13155 meets the Standard



- Designed for carrying industrial FIBC containers (BIG-BAG, JUMBO, super sack, tonne bag) with belt slings
- The TBB-KB lifting beam allows unloading of bags with a lower discharge hopper or an opening bottom
- It is possible to suspend the entire load (WLL)on the rotating central hook

| Code | WLL [t] | BIG-BAG size [mm] | Mass [kg] |
|---|---|---|---|
| **TBB-KB 1.2-1.05** | 1,2 | 1050x1050 | 42 |

1,2 t - load capacity (WLL)
1050x1050 mm - BIG-BAG size

# DxL-TBB-JA BIG-BAG lifting beam

Declaration of conformity 2006/42/EC manufactured according to Directive Made in EU

20 000 max. no. of work cycles | endurance test 100% according to EN 13155 | EN 13155 meets the Standard

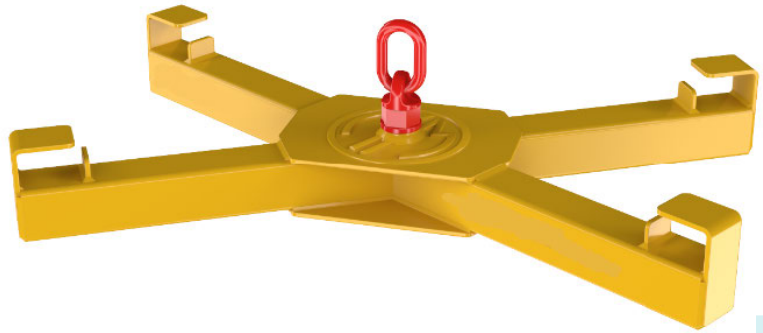

- Designed for carrying industrial FIBC containers (BIG-BAG, JUMBO, super sack, tonne bag) with belt slings
- The TBB-JA lifting beam allows unloading of bags with a lower discharge hopper or an opening bottom
- The TBB-JA lifting beam is suspended on a swivel and tilt point WSI hitch with a link

| Code | WLL [t] | BIG-BAG size [mm] | Mass [kg] |
|---|---|---|---|
| **TBB-JA 2.0-0.9** | 2,0 | 900x900 | 30 |

2,0 t - load capacity (WLL)
900x900 mm - BIG-BAG size

## DxL-TBB-SA BIG-BAG lifting beam

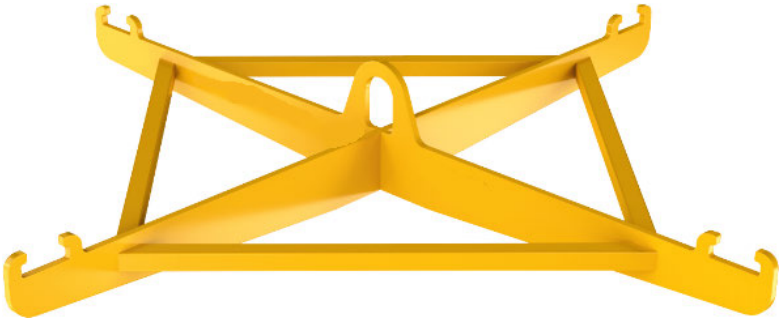

CE Declaration of conformity 2006/42/EC manufactured according to Directive Made in EU

20 000 max. no. of work cycles | endurance test 100% according to EN 13155 | EN 13155 meets the Standard

- Designed for carrying industrial FIBC containers (BIG-BAG, JUMBO, super sack, tonne bag) with belt slings
- The TBB-SA lifting beam allows unloading of bags with a lower discharge hopper or an opening bottom

| Code | WLL [t] | BIG-BAG size [mm] | Mass [kg] |
|---|---|---|---|
| **TBB-SA 1.2-1.3** | 1,2 | 1000x1000 | 29 |

1,2 t - load capacity (WLL)
1000x1000 mm - BIG-BAG size

## DxL-TBB-UA BIG-BAG lifting beam



CE Declaration of conformity 2006/42/EC manufactured according to Directive Made in EU

20 000 max. no. of work cycles | endurance test 100% according to EN 13155 | EN 13155 meets the Standard

- Designed for carrying industrial FIBC containers (BIG-BAG, JUMBO, super sack, tonne bag) with belt slings
- The TBB-UA lifting beam allows unloading of bags with a lower discharge hopper or an opening bottom

| Code | WLL [t] | BIG-BAG size [mm] | Mass [kg] |
|---|---|---|---|
| **TBB-UA 1.5-1.05** | 1,5 | 1050x1050, 1150x1150 | 54 |

1,5 t - load capacity (WLL)
1050x1050 i 1150x1150 mm - BIG-BAG size

## DxL-TBB-GB BIG-BAG lifting beam



CE Declaration of conformity 2006/42/EC manufactured according to Directive Made in EU

20 000 max. no. of work cycles | endurance test 100% according to EN 13155 | EN 13155 meets the Standard

- Designed for carrying industrial FIBC containers (BIG-BAG, JUMBO, super sack, tonne bag) with belt slings
- The TBB-GB lifting beam allows unloading of bags with a lower discharge hopper or an opening bottom

| Code | WLL [t] | BIG-BAG size [mm] | Mass [kg] |
|---|---|---|---|
| **TBB-GB 1.5-0.95** | 1,5 | 950x950 | 41 |
| **TBB-GB 2.0-0.95** | 2,0 | 950x950 | 45 |

1,5 i 2,0 t - load capacity (WLL)
950x950 mm - BIG-BAG size

## **TBB-INOX-HA** BIG-BAG lifting beam

CE Declaration of conformity 2006/42/EC manufactured according to Directive Made in EU

20 000 max. no. of work cycles | endurance test 100% according to EN 13155 | EN 13155 meets the Standard

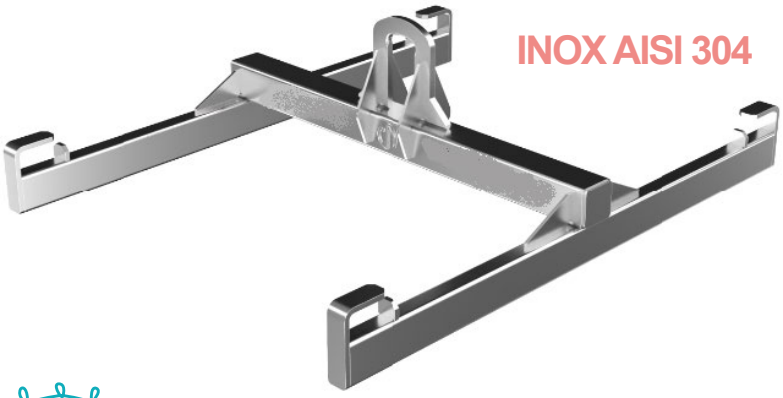

INOX AISI 304

- Designed for carrying industrial FIBC containers (BIG-BAG, JUMBO, super sack, tonne bag) with belt slings
- The TBB-INOX-HA lifting beam allows unloading of bags with a lower discharge hopper or an opening bottom

| Code | WLL [t] | BIG-BAG size [mm] | Mass [kg] |
|---|---|---|---|
| **TBB-INOX HA 2.0-0.9-1.1** | 2,0 | 1100x900 | 39 |

2,0 t - load capacity (WLL)
1100x900 mm - BIG-BAG size

## **DxL-TBB-INOX-YA** BIG-BAG lifting beam

CE Declaration of conformity 2006/42/EC manufactured according to Directive Made in EU

20 000 max. no. of work cycles | endurance test 100% according to EN 13155 | EN 13155 meets the Standard

INOX AISI 304



- Designed for carrying industrial FIBC containers (BIG-BAG, JUMBO, super sack, tonne bag) with belt slings
- The TBB-INOX-YA lifting beam allows unloading of bags with a lower discharge hopper or an opening bottom

| Code | WLL [t] | BIG-BAG size [mm] | Mass [kg] |
|---|---|---|---|
| **TBB-INOX-YA 1.25-0.8** | 1,25 | 800x800 | 26 |

1,25 t - load capacity (WLL)
800x800 mm - BIG-BAG size

## **DxL-TBB-C** BIG-BAG lifting beam

CE Declaration of conformity 2006/42/EC manufactured according to Directive Made in EU

20 000 max. no. of work cycles | endurance test 100% according to EN 13155 | EN 13155 meets the Standard



- Designed for carrying industrial FIBC containers (BIG-BAG, JUMBO, super sack, tonne bag) with belt slings
- The TBB-C lifting beam allows unloading of bags with a lower discharge hopper or an opening bottom

| Code | WLL [t] | BIG-BAG size [mm] | Mass [kg] |
|---|---|---|---|
| **TBB-C 0.43-0.85** | 0,43 | 850x850 | 105 |

0,43 t - load capacity (WLL)
850x850 mm - BIG-BAG size

# DxL-TBB-W BIG-BAG lifting beam

CE Declaration of conformity | 2006/42/EC manufactured according to Directive | Made in EU

20 000 max. no. of work cycles | endurance test 100% according to EN 13155 | EN 13155 meets the Standard

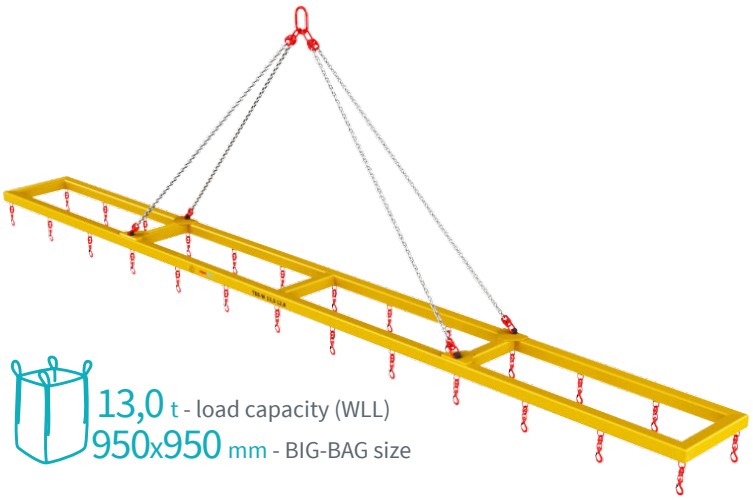

13,0 t - load capacity (WLL)
950x950 mm - BIG-BAG size

- Designed for carrying industrial FIBC containers (BIG-BAG, JUMBO, super sack, tonne bag) with belt slings
- The TBB-W lifting beam allows unloading of bags with a lower discharge hopper or an opening bottom

| Code | WLL [t] | BIG-BAG size [mm] | Mass [kg] |
|---|---|---|---|
| **TBB-W 13.0-12** | 13 | 12szt. 950x950 | 1115 |

# DxL-TBB-ZA BIG-BAG lifting beam

CE Declaration of conformity | 2006/42/EC manufactured according to Directive | Made in EU

20 000 max. no. of work cycles | endurance test 100% according to EN 13155 | EN 13155 meets the Standard

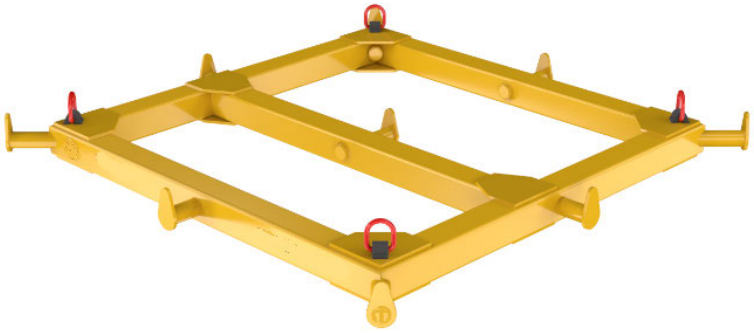

5,4 t - load capacity (WLL)

- Designed for carrying industrial FIBC containers (BIG-BAG, JUMBO, super sack, tonne bag) with belt slings
- The TBB-ZA lifting beam allows unloading of bags with a lower discharge hopper or an opening bottom

| Code | WLL [t] | BIG-BAG size | Mass [kg] |
|---|---|---|---|
| **TBB-ZA 5.4-9.0** | 5,4 | 9 bags max 600kg | 100 |

# DxL-TBB-VA BIG-BAG lifting beam

CE Declaration of conformity | 2006/42/EC manufactured according to Directive | Made in EU

20 000 max. no. of work cycles | endurance test 100% according to EN 13155 | EN 13155 meets the Standard



1,0, 1,6 i 2,0 t - load capacity (WLL)
850x850 mm - BIG-BAG size

- Designed for carrying industrial FIBC containers (BIG-BAG, JUMBO, super sack, tonne bag) with belt slings
- The TBB-VA lifting beam allows unloading of bags with a lower discharge hopper or an opening bottom

| Code | WLL [t] | BIG-BAG size [mm] | Mass [kg] |
|---|---|---|---|
| **TBB-VA 1.0-0.85** | 1,0 | 850x850 | 21 |
| **TBB-VA 1.6-0.85** | 1,6 | 850x850 | 30 |
| **TBB-VA 2.0-0.85** | 2,0 | 850x850 | 32 |

# DxL-TBB-MA BIG-BAG lifting beam

CE Declaration of conformity 2006/42/EC manufactured according to Directive Made in EU

20 000 max. no. of work cycles | endurance test 100% according to EN 13155 | EN 13155 meets the Standard



- PDesigned for carrying industrial FIBC containers (BIG-BAG, JUMBO, super sack, tonne bag) with belt slings
- The TBB-MA lifting beam allows unloading of bags with a lower discharge hopper or an opening bottom
- Ballast stabilizes the position of the load during transport. Single ballast weight: 72 kg

| Code | WLL [t] | BIG-BAG size [mm] | Mass [kg] |
|---|---|---|---|
| TBB-MA 1.0-0.87 | 1,0 | 870x870 | 182 |

1,0 t - load capacity (WLL)
870x870 mm - BIG-BAG size

# DxL-TBB-O BIG-BAG lifting beam

CE Declaration of conformity 2006/42/EC manufactured according to Directive Made in EU

20 000 max. no. of work cycles | endurance test 100% according to EN 13155 | EN 13155 meets the Standard



- PDesigned for carrying industrial FIBC containers (BIG-BAG, JUMBO, super sack, tonne bag) with belt slings
- The TBB-O lifting beam allows unloading of bags with a lower discharge hopper or an opening bottom
- Screws equipped with double safety pins

| Code | WLL [t] | BIG-BAG size [mm] | Mass [kg] |
|---|---|---|---|
| TBB-O 1.8-1.05 | 1,8 | 1050x1050 | 63 |

1,8 t - load capacity (WLL)
1050x1050 mm - BIG-BAG size

# DxL-TBB-L BIG-BAG lifting beam

CE Declaration of conformity 2006/42/EC manufactured according to Directive Made in EU

20 000 max. no. of work cycles | endurance test 100% according to EN 13155 | EN 13155 meets the Standard



- Designed for carrying industrial FIBC containers (BIG-BAG, JUMBO, super sack, tonne bag) with belt slings
- The TBB-L lifting beam allows unloading of bags with a lower discharge hopper or an opening bottom

| Code | WLL [t] | BIG-BAG size [mm] | Mass [kg] |
|---|---|---|---|
| TBB-L 1.8-3 | 1,8 | 3 szt. max 600kg | 300 |

1,8 t - load capacity (WLL)
600 kg - max. load on a single hook

DECORLUX
HIJSTECHNIEK
TECHNIQUE LEVAGE
HEBETECHNIK
LIFTING TECHNICS




# Lifting beams

- Standard
- Adjustable
- Dismountable
- Aluminium

# DxL-TR A-M Standard lifting beam

CE Declaration of conformity 2006/42/EC manufactured according to Directive Made in EU

20 000 max. no. of work cycles | endurance test 100% according to EN 13155 | EN 13155 meets the Standard

load WLL 0,5-20 t

1-8 m

- Has a rating plate with: manufacturer's mark, CE mark, lifting capacity, factory number, year of production, size and weight
- Fixed working spacing
- Sold with accessories: 2x AOW handle welded to the supporting beam, 2x C-type connector, 2x WHE swivel hook with bearings

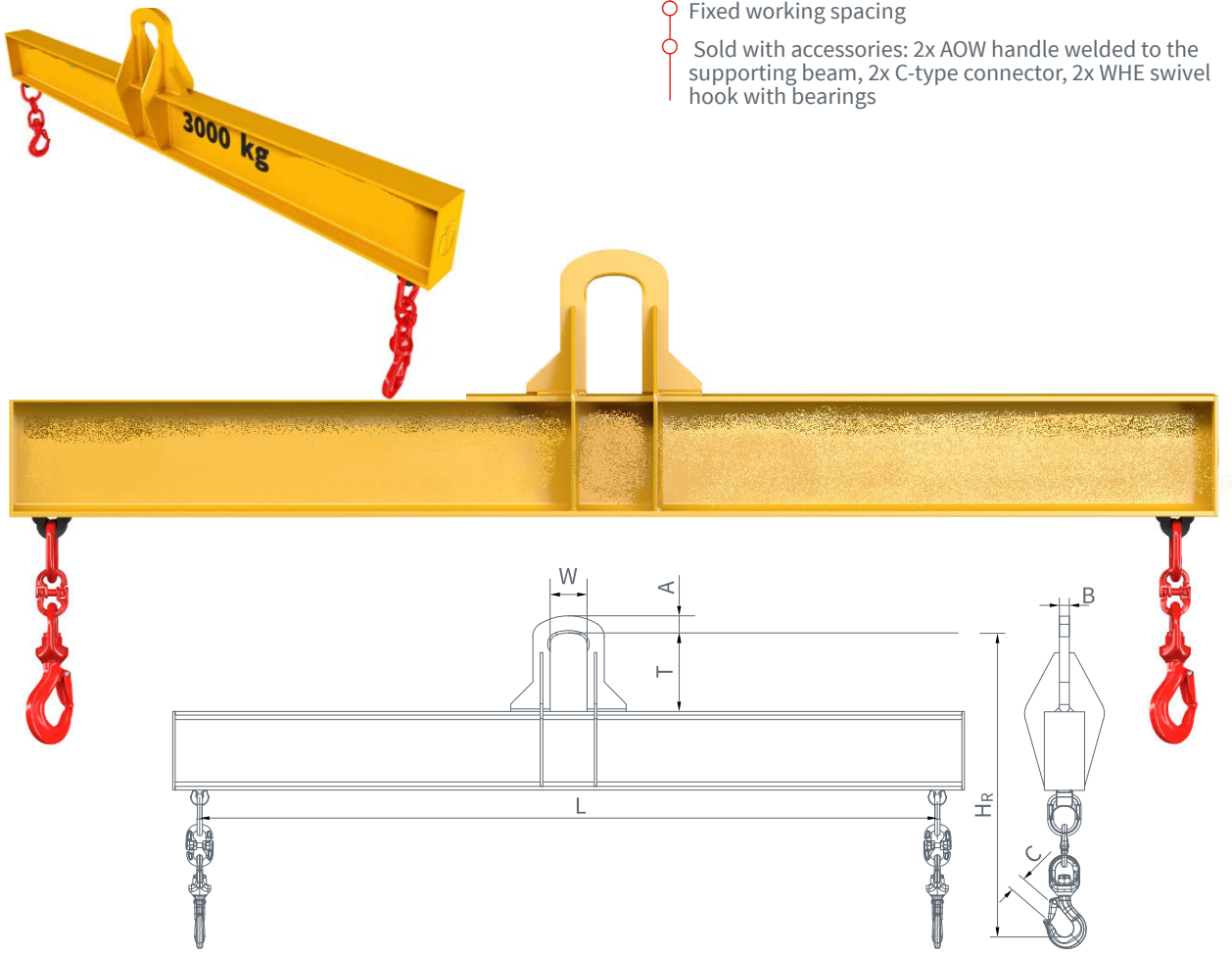


## Working length L [m]

| WLL [t] | Dimensions [mm] | | 1 | 1,5 | 2 | 2,5 | 3 | 3,5 | 4 | 4,5 | 5 | 5,5 | 6 | 7 | 8 |
|---|---|---|---|---|---|---|---|---|---|---|---|---|---|---|---|
| 0,5 | A=20 B=10 C=20 W=60 T=130 | Code TR A-M | 0.5-1.0 | 0.5-1.5 | 0.5-2.0 | 0.5-2.5 | 0.5-3.0 | 0.5-3.5 | 0.5-4.0 | 0.5-4.5 | 0.5-5.0 | 0.5-5.5 | 0.5-6.0 | 0.5-7.0 | 0.5-8.0 |
| | | HR [mm] | 395 | 395 | 415 | 435 | 435 | 455 | 475 | 475 | 495 | 495 | 415 | 435 | 435 |
| | | Mass [kg] | 20 | 25 | 35 | 45 | 50 | 70 | 85 | 95 | 120 | 130 | 150 | 210 | 240 |
| 1,0 | A=25 B=12 C=20 W=60 T=130 | Code TR A-M | 1.0-1.0 | 1.0-1.5 | 1.0-2.0 | 1.0-2.5 | 1.0-3.0 | 1.0-3.5 | 1.0-4.0 | 1.0-4.5 | 1.0-5.0 | 1.0-5.5 | 1.0-6.0 | 1.0-7.0 | 1.0-8.0 |
| | | HR [mm] | 415 | 415 | 435 | 455 | 475 | 495 | 495 | 515 | 435 | 435 | 455 | 455 | 475 |
| | | Mass [kg] | 25 | 30 | 40 | 55 | 70 | 85 | 95 | 125 | 160 | 175 | 230 | 265 | 380 |
| 2,0 | A=35 B=15 C=20 W=75 T=160 | Code TR A-M | 2.0-1.0 | 2.0-1.5 | 2.0-2.0 | 2.0-2.5 | 2.0-3.0 | 2.0-3.5 | 2.0-4.0 | 2.0-4.5 | 2.0-5.0 | 2.0-5.5 | 2.0-6.0 | 2.0-7.0 | 2.0-8.0 |
| | | HR [mm] | 465 | 485 | 505 | 525 | 545 | 485 | 485 | 485 | 505 | 505 | 505 | 525 | 545 |
| | | Mass [kg] | 30 | 40 | 55 | 75 | 100 | 145 | 165 | 185 | 245 | 270 | 295 | 400 | 550 |
| 3,0 | A=35 B=20 C=22 W=75 T=160 | Code TR A-M | 3.0-1.0 | 3.0-1.5 | 3.0-2.0 | 3.0-2.5 | 3.0-3.0 | 3.0-3.5 | 3.0-4.0 | 3.0-4.5 | 3.0-5.0 | 3.0-5.5 | 3.0-6.0 | 3.0-7.0 | 3.0-8.0 |
| | | HR [mm] | 527 | 547 | 567 | 587 | 527 | 547 | 547 | 547 | 567 | 567 | 567 | 587 | 607 |
| | | Mass [kg] | 35 | 45 | 65 | 85 | 130 | 185 | 210 | 235 | 290 | 320 | 350 | 470 | 630 |
| 5,0 | A=45 B=25 C=33 W=100 T=200 | Code TR A-M | 5.0-1.0 | 5.0-1.5 | 5.0-2.0 | 5.0-2.5 | 5.0-3.0 | 5.0-3.5 | 5.0-4.0 | 5.0-4.5 | 5.0-5.0 | 5.0-5.5 | 5.0-6.0 | 5.0-7.0 | 5.0-8.0 |
| | | HR [mm] | 621 | 661 | 601 | 621 | 621 | 641 | 641 | 661 | 661 | 681 | 681 | 701 | 721 |
| | | Mass [kg] | 45 | 65 | 100 | 140 | 165 | 225 | 255 | 330 | 360 | 460 | 495 | 650 | 830 |
| 7,5 | A=55 B=30 C=34 W=110 T=220 | Code TR A-M | 7.5-1.0 | 7.5-1.5 | 7.5-2.0 | 7.5-2.5 | 7.5-3.0 | 7.5-3.5 | 7.5-4.0 | 7.5-4.5 | 7.5-5.0 | 7.5-5.5 | 7.5-6.0 | 7.5-7.0 | 7.5-8.0 |
| | | HR [mm] | 754 | 714 | 734 | 734 | 754 | 754 | 774 | 774 | 794 | 794 | 814 | 834 | 854 |
| | | Mass [kg] | 55 | 100 | 145 | 175 | 240 | 270 | 350 | 385 | 490 | 535 | 650 | 820 | 1100 |
| 10,0 | A=60 B=35 C=34 W=120 T=250 | Code TR A-M | 10.0-1.0 | 10.0-1.5 | 10.0-2.0 | 10.0-2.5 | 10.0-3.0 | 10.0-3.5 | 10.0-4.0 | 10.0-4.5 | 10.0-5.0 | 10.0-5.5 | 10.0-6.0 | 10.0-7.0 | 10.0-8.0 |
| | | HR [mm] | 744 | 764 | 784 | 784 | 804 | 804 | 824 | 844 | 844 | 864 | 864 | 884 | 904 |
| | | Mass [kg] | 80 | 130 | 180 | 210 | 285 | 320 | 420 | 500 | 550 | 660 | 710 | 950 | 1200 |
| 15,0 | A=70 B=45 C=48 W=130 T=270 | Code TR A-M | 15.0-1.0 | 15.0-1.5 | 15.0-2.0 | 15.0-2.5 | 15.0-3.0 | 15.0-3.5 | 15.0-4.0 | 15.0-4.5 | 15.0-5.0 | 15.0-5.5 | 15.0-6.0 | 15.0-7.0 | 15.0-8.0 |
| | | HR [mm] | 866 | 886 | 886 | 906 | 926 | 926 | 946 | 966 | 966 | 986 | 986 | 1026 | 1066 |
| | | Mass [kg] | 110 | 170 | 205 | 300 | 380 | 430 | 510 | 620 | 680 | 800 | 865 | 1100 | 1400 |
| 20,0 | A=80 B=45 C=45 W=150 T=330 | Code TR A-M | 20.0-1.0 | 20.0-1.5 | 20.0-2.0 | 20.0-2.5 | 20.0-3.0 | 20.0-3.5 | 20.0-4.0 | 20.0-4.5 | 20.0-5.0 | 20.0-5.5 | 20.0-6.0 | 20.0-7.0 | 20.0-8.0 |
| | | HR [mm] | 1010 | 1030 | 1050 | 1070 | 1070 | 1090 | 1110 | 1110 | 1130 | 1150 | 1190 | 1240 | 1290 |
| | | Mass [kg] | 170 | 225 | 290 | 360 | 410 | 510 | 610 | 675 | 780 | 900 | 1050 | 1350 | 1700 |

# DxL-TRR A-M

## Adjustable lifting beam

load WLL **0,5-20 t**

**1-8 m**

Declaration of conformity 2006/42/EC manufactured according to Directive Made in EU

20 000 max. no. of work cycles | endurance test 100% according to EN 13155 | EN 13155 meets the Standard

- Has a rating plate with: manufacturer's mark, CE mark, lifting capacity, factory number, year of production, size and weight
- Adjustable working spacing - floating frame with maneuvering handle
- Sold with accessories: 2x BX type shackle, 2x WHE swivel hook with bearings



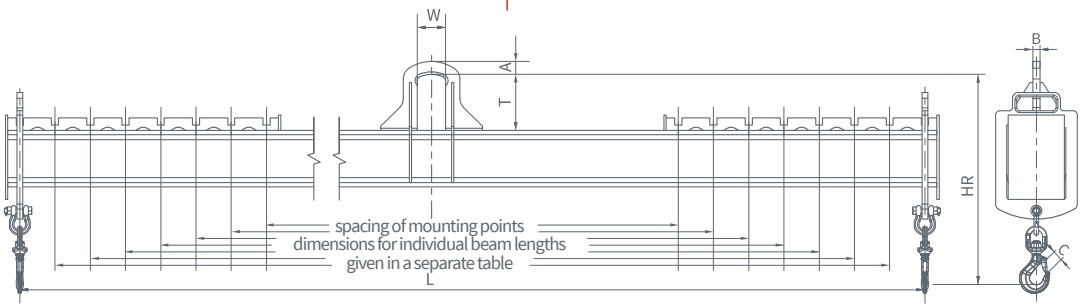


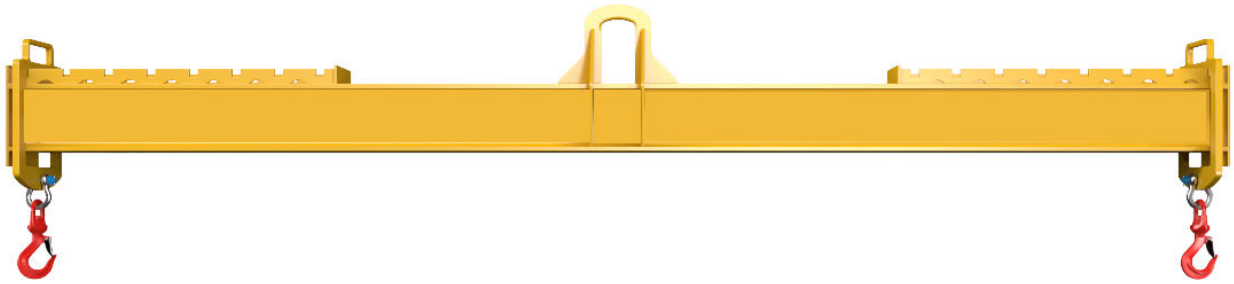

## Working length L [m]

| WLL [t] | Dimensions [mm] | | 1 | 1,5 | 2 | 2,5 | 3 | 3,5 | 4 | 4,5 | 5 | 5,5 | 6 | 7 | 8 |
|---|---|---|---|---|---|---|---|---|---|---|---|---|---|---|---|
| 0,5 | A=20 B=10 C=20 W=60 T=130 | Code TRR A-M | 0.5-1.0 | 0.5-1.5 | 0.5-2.0 | 0.5-2.5 | 0.5-3.0 | 0.5-3.5 | 0.5-4.0 | 0.5-4.5 | 0.5-5.0 | 0.5-5.5 | 0.5-6.0 | 0.5-7.0 | 0.5-8.0 |
| | | HR [mm] | 378 | 398 | 398 | 418 | 438 | 458 | 458 | 478 | 398 | 398 | 418 | 418 | 438 |
| | | Mass [kg] | 25 | 35 | 40 | 50 | 60 | 80 | 90 | 105 | 135 | 145 | 190 | 215 | 300 |
| 1,0 | A=25 B=12 C=20 W=60 T=130 | Code TRR A-M | 1.0-1.0 | 1.0-1.5 | 1.0-2.0 | 1.0-2.5 | 1.0-3.0 | 1.0-3.5 | 1.0-4.0 | 1.0-4.5 | 1.0-5.0 | 1.0-5.5 | 1.0-6.0 | 1.0-7.0 | 1.0-8.0 |
| | | HR [mm] | 420 | 440 | 460 | 480 | 500 | 520 | 520 | 440 | 440 | 460 | 460 | 480 | 480 |
| | | Mass [kg] | 30 | 40 | 50 | 70 | 85 | 110 | 120 | 150 | 165 | 215 | 235 | 340 | 385 |
| 2,0 | A=35 B=15 C=20 W=75 T=160 | Code TRR A-M | 2.0-1.0 | 2.0-1.5 | 2.0-2.0 | 2.0-2.5 | 2.0-3.0 | 2.0-3.5 | 2.0-4.0 | 2.0-4.5 | 2.0-5.0 | 2.0-5.5 | 2.0-6.0 | 2.0-7.0 | 2.0-8.0 |
| | | HR [mm] | 482 | 502 | 542 | 562 | 482 | 502 | 502 | 522 | 522 | 522 | 542 | 542 | 562 |
| | | Mass [kg] | 40 | 50 | 70 | 100 | 125 | 155 | 175 | 235 | 260 | 285 | 360 | 410 | 560 |
| 3,0 | A=35 B=20 C=22 W=75 T=160 | Code TRR A-M | 3.0-1.0 | 3.0-1.5 | 3.0-2.0 | 3.0-2.5 | 3.0-3.0 | 3.0-3.5 | 3.0-4.0 | 3.0-4.5 | 3.0-5.0 | 3.0-5.5 | 3.0-6.0 | 3.0-7.0 | 3.0-8.0 |
| | | HR [mm] | 502 | 542 | 562 | 502 | 502 | 522 | 522 | 542 | 542 | 562 | 562 | 592 | 592 |
| | | Mass [kg] | 45 | 60 | 85 | 125 | 140 | 195 | 220 | 275 | 300 | 390 | 420 | 570 | 640 |
| 5,0 | A=45 B=25 C=33 W=100 T=200 | Code TRR A-M | 5.0-1.0 | 5.0-1.5 | 5.0-2.0 | 5.0-2.5 | 5.0-3.0 | 5.0-3.5 | 5.0-4.0 | 5.0-4.5 | 5.0-5.0 | 5.0-5.5 | 5.0-6.0 | 5.0-7.0 | 5.0-8.0 |
| | | HR [mm] | 628 | 648 | 608 | 608 | 628 | 628 | 648 | 648 | 678 | 678 | 698 | 718 | 718 |
| | | Mass [kg] | 65 | 80 | 135 | 155 | 215 | 240 | 315 | 345 | 440 | 475 | 625 | 750 | 845 |
| 7,5 | A=55 B=30 C=34 W=110 T=220 | Code TRR A-M | 7.5-1.0 | 7.5-1.5 | 7.5-2.0 | 7.5-2.5 | 7.5-3.0 | 7.5-3.5 | 7.5-4.0 | 7.5-4.5 | 7.5-5.0 | 7.5-5.5 | 7.5-6.0 | 7.5-7.0 | 7.5-8.0 |
| | | HR [mm] | 728 | 688 | 708 | 708 | 728 | 758 | 758 | 778 | 778 | 798 | 798 | 838 | 838 |
| | | Mass [kg] | 75 | 120 | 165 | 195 | 260 | 335 | 370 | 470 | 510 | 625 | 670 | 1000 | 1120 |
| 10,0 | A=60 B=35 C=34 W=120 T=250 | Code TRR A-M | 10.0-1.5 | 10.0-1.5 | 10.0-2.0 | 10.0-2.5 | 10.0-3.0 | 10.0-3.5 | 10.0-4.0 | 10.0-4.5 | 10.0-5.0 | 10.0-5.5 | 10.0-6.0 | 10.0-7.0 | 10.0-8.0 |
| | | HR [mm] | 718 | 738 | 758 | 758 | 788 | 808 | 808 | 828 | 848 | 848 | 868 | 898 | 938 |
| | | Mass [kg] | 110 | 160 | 210 | 240 | 315 | 410 | 450 | 530 | 640 | 690 | 865 | 1100 | 1320 |
| 15,0 | A=70 B=45 C=48 W=130 T=270 | Code TRR A-M | 15.0-1.0 | 15.0-1.5 | 15.0-2.0 | 15.0-2.5 | 15.0-3.0 | 15.0-3.5 | 15.0-4.0 | 15.0-4.5 | 15.0-5.0 | 15.0-5.5 | 15.0-6.0 | 15.0-7.0 | 15.0-8.0 |
| | | HR [mm] | 884 | 914 | 934 | 934 | 954 | 974 | 974 | 994 | 1024 | 1044 | 1064 | 1104 | 1154 |
| | | Mass [kg] | 150 | 210 | 300 | 340 | 420 | 500 | 550 | 660 | 775 | 885 | 1050 | 1285 | 1560 |
| 20,0 | A=80 B=45 C=45 W=150 T=330 | Code TRR A-M | 20.0-1.0 | 20.0-1.5 | 20.0-2.0 | 20.0-2.5 | 20.0-3.0 | 20.0-3.5 | 20.0-4.0 | 20.0-4.5 | 20.0-5.0 | 20.0-5.5 | 20.0-6.0 | 20.0-7.0 | 20.0-8.0 |
| | | HR [mm] | 1044 | 1064 | 1084 | 1104 | 1124 | 1124 | 1154 | 1174 | 1194 | 1234 | 1284 | 1334 | 1384 |
| | | Mass [kg] | 220 | 275 | 340 | 410 | 500 | 560 | 660 | 765 | 880 | 1025 | 1230 | 1565 | 1850 |

## Spacing of mounting points [m] for individual working lengths of the TRR A-M lifting beam [m]

| Working length L [m] | 1 | 1,5 | 2 | 2,5 | 3 | 3,5 | 4 | 4,5 | 5 | 5,5 | 6 | 7 | 8 |
|---|---|---|---|---|---|---|---|---|---|---|---|---|---|
| | 1,0 | 1,5 | 2,0 | 2,5 | 3,0 | 3,5 | 4,0 | 4,5 | 5,0 | 5,5 | 6,0 | 7,0 | 8,0 |
| | 0,5 | 1,0 | 1,5 | 2,0 | 2,5 | 3,0 | 3,5 | 4,0 | 4,5 | 5,0 | 5,5 | 6,5 | 7,5 |
| | | 0,5 | 1,0 | 1,5 | 2,0 | 2,5 | 3,0 | 3,5 | 4,0 | 4,5 | 5,0 | 6,0 | 7,0 |
| | | | | 1,0 | 1,5 | 2,0 | 2,5 | 3,0 | 3,5 | 4,0 | 4,5 | 5,5 | 6,5 |
| | | | | | | 1,5 | 2,0 | 2,5 | 3,0 | 3,5 | 4,0 | 5,0 | 6,0 |
| | | | | | | | | | 2,5 | 3,0 | 3,5 | 4,5 | 5,5 |
| | | | | | | | | | | | 3,0 | 4,0 | 5,0 |
| | | | | | | | | | | | | 3,5 | 4,5 |
| | | | | | | | | | | | | | 4,0 |

# DxL-TRS A-M

## Standard demountable lifting beam

Declaration of conformity 2006/42/EC manufactured according to Directive Made in EU

20 000 max. no. of work cycles | endurance test 100% according to EN 13155 | EN 13155 meets the Standard

load WLL 0,5-20 t | 1-8 m

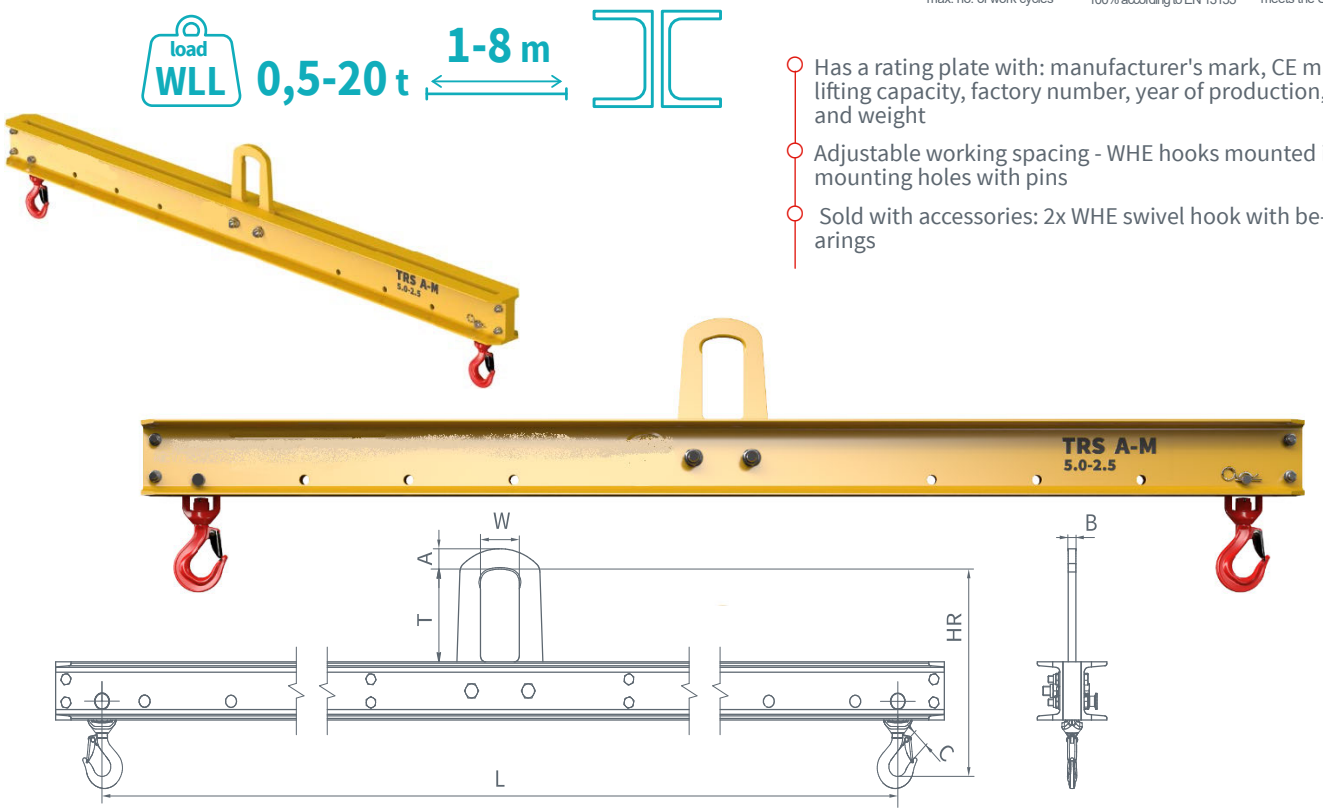


- Has a rating plate with: manufacturer's mark, CE mark, lifting capacity, factory number, year of production, size and weight
- Adjustable working spacing - WHE hooks mounted in-mounting holes with pins
- Sold with accessories: 2x WHE swivel hook with bearings

## Working length L [m]

| WLL [t] | Dimensions [mm] | | 1 | 1,5 | 2 | 2,5 | 3 | 3,5 | 4 | 4,5 | 5 | 5,5 | 6 | 7 | 8 |
|---|---|---|---|---|---|---|---|---|---|---|---|---|---|---|---|
| 0,5 | A=20 B=15 C=27,5 W=60 T=130 | Code TRS A-M | 0.5-1.0 | 0.5-1.5 | 0.5-2.0 | 0.5-2.5 | 0.5-3.0 | 0.5-3.5 | 0.5-4.0 | 0.5-4.5 | 0.5-5.0 | 0.5-5.5 | 0.5-6.0 | 0.5-7.0 | 0.5-8.0 |
| | | HR [mm] | 320 | 335 | 345 | 366 | 366 | 386 | 386 | 405 | 405 | 405 | 424 | 424 | 424 |
| | | Mass [kg] | 26 | 34 | 42 | 61 | 72 | 103 | 116 | 153 | 169 | 185 | 235 | 318 | 416 |
| 1,0 | A=20 B=15 C=27,5 W=60 T=130 | Code TRS A-M | 1.0-1.0 | 1.0-1.5 | 1.0-2.0 | 1.0-2.5 | 1.0-3.0 | 1.0-3.5 | 1.0-4.0 | 1.0-4.5 | 1.0-5.0 | 1.0-5.5 | 1.0-6.0 | 1.0-7.0 | 1.0-8.0 |
| | | HR [mm] | 375 | 394 | 394 | 414 | 432 | 432 | 432 | 451 | 451 | 460 | 460 | 480 | 500 |
| | | Mass [kg] | 35 | 51 | 61 | 87 | 117 | 133 | 149 | 192 | 211 | 270 | 292 | 385 | 502 |
| 2,0 | A=30 B=20 C=27,5 W=75 T=160 | Code TRS A-M | 2.0-1.0 | 2.0-1.5 | 2.0-2.0 | 2.0-2.5 | 2.0-3.0 | 2.0-3.5 | 2.0-4.0 | 2.0-4.5 | 2.0-5.0 | 2.0-5.5 | 2.0-6.0 | 2.0-7.0 | 2.0-8.0 |
| | | HR [mm] | 482 | 502 | 542 | 562 | 482 | 502 | 502 | 522 | 522 | 522 | 542 | 542 | 562 |
| | | Mass [kg] | 40 | 50 | 70 | 100 | 125 | 155 | 175 | 235 | 260 | 285 | 360 | 410 | 560 |
| 3,0 | A=35 B=20 C=27,5 W=75 T=160 | Code TRS A-M | 3.0-1.0 | 3.0-1.5 | 3.0-2.0 | 3.0-2.5 | 3.0-3.0 | 3.0-3.5 | 3.0-4.0 | 3.0-4.5 | 3.0-5.0 | 3.0-5.5 | 3.0-6.0 | 3.0-7.0 | 3.0-8.0 |
| | | HR [mm] | 390 | 410 | 410 | 429 | 448 | 448 | 456 | 456 | 476 | 476 | 476 | 496 | 516 |
| | | Mass [kg] | 45 | 65 | 80 | 105 | 140 | 160 | 215 | 240 | 295 | 320 | 355 | 460 | 585 |
| 5,0 | A=45 B=25 C=34,5 W=100 T=200 | Code TRS A-M | 5.0-1.0 | 5.0-1.5 | 5.0-2.0 | 5.0-2.5 | 5.0-3.0 | 5.0-3.5 | 5.0-4.0 | 5.0-4.5 | 5.0-5.0 | 5.0-5.5 | 5.0-6.0 | 5.0-7.0 | 5.0-8.0 |
| | | HR [mm] | 480 | 500 | 520 | 538 | 538 | 548 | 568 | 568 | 588 | 588 | 608 | 608 | 624 |
| | | Mass [kg] | 55 | 75 | 105 | 140 | 165 | 225 | 280 | 310 | 380 | 420 | 505 | 585 | 725 |
| 7,5 | A=55 B=25 C=34,5 W=110 T=220 | Code TRS A-M | 7.5-1.0 | 7.5-1.5 | 7.5-2.0 | 7.5-2.5 | 7.5-3.0 | 7.5-3.5 | 7.5-4.0 | 7.5-4.5 | 7.5-5.0 | 7.5-5.5 | 7.5-6.0 | 7.5-7.0 | 7.5-8.0 |
| | | HR [mm] | 555 | 590 | 614 | 632 | 625 | 640 | 670 | 660 | 680 | 680 | 696 | 715 | 715 |
| | | Mass [kg] | 70 | 105 | 145 | 195 | 230 | 295 | 365 | 390 | 485 | 525 | 625 | 915 | 980 |
| 10,0 | A=60 B=35 C=38,3 W=120 T=250 | Code TRS A-M | 10.0-1.0 | 10.0-1.5 | 10.0-2.0 | 10.0-2.5 | 10.0-3.0 | 10.0-3.5 | 10.0-4.0 | 10.0-4.5 | 10.0-5.0 | 10.0-5.5 | 10.0-6.0 | 10.0-7.0 | 10.0-8.0 |
| | | HR [mm] | 620 | 639 | 659 | 679 | 698 | 684 | 700 | 720 | 720 | 740 | 740 | 770 | 800 |
| | | Mass [kg] | 110 | 140 | 185 | 235 | 310 | 360 | 445 | 535 | 590 | 775 | 840 | 980 | 1150 |
| 15,0 | A=70 B=40 C=44,5 W=130 T=270 | Code TRS A-M | 15.0-1.0 | 15.0-1.5 | 15.0-2.0 | 15.0-2.5 | 15.0-3.0 | 15.0-3.5 | 15.0-4.0 | 15.0-4.5 | 15.0-5.0 | 15.0-5.5 | 15.0-6.0 | | |
| | | HR [mm] | 720 | 760 | 760 | 780 | 799 | 818 | 818 | 830 | 860 | 878 | 878 | | |
| | | Mass [kg] | 150 | 215 | 255 | 315 | 390 | 540 | 605 | 680 | 780 | 930 | 1040 | | |
| 20,0 | A=80 B=45 C=64 W=150 T=300 | Code TRS A-M | 20.0-1.0 | 20.0-1.5 | 20.0-2.0 | 20.0-2.5 | 20.0-3.0 | 20.0-3.5 | 20.0-4.0 | 20.0-4.5 | | | | | |
| | | HR [mm] | 802 | 822 | 842 | 862 | 892 | 908 | 922 | 922 | | | | | |
| | | Mass [kg] | 250 | 300 | 365 | 495 | 560 | 645 | 785 | 865 | | | | | |

## Spacing of mounting points [m] for individual working lengths of the TRS A-M lifting beam [m]

| Working length L [m] | 1 | 1,5 | 2 | 2,5 | 3 | 3,5 | 4 | 4,5 | 5 | 5,5 | 6 | 7 | 8 |
|---|---|---|---|---|---|---|---|---|---|---|---|---|---|
| | 1 | 1,5 | 2 | 2,5 | 3 | 3,5 | 4 | 4,5 | 5 | 5,5 | 6 | 7 | 8 |
| | 0,5 | 1 | 1,5 | 2 | 2,5 | 3 | 3,5 | 4 | 4,5 | 5 | 5,5 | 6,5 | 7,5 |
| | | 0,5 | 1 | 1,5 | 2 | 2,5 | 3 | 3,5 | 4 | 4,5 | 5 | 6 | 7 |
| | | | 0,5 | 1 | 1,5 | 2 | 2,5 | 3 | 3,5 | 4 | 4,5 | 5,5 | 6,5 |
| | | | | | 1 | 1,5 | 2 | 2,5 | 3 | 3,5 | 4 | 5 | 6 |
| | | | | | | 1 | 1,5 | 2 | 2,5 | 3 | 3,5 | 4,5 | 5,5 |
| | | | | | | | | 1,5 | 2 | 2,5 | 3 | 4 | 5 |
| | | | | | | | | | | 2 | 2,5 | 3,5 | 4,5 |
| | | | | | | | | | | | | 3 | 4 |
| | | | | | | | | | | | | | 3,5 |
| | | | | | | | | | | | | | 3 |

# DxL-TRAL A-M

## Aluminum lifting beam

load WLL **0,25-4 t** **0,5-6 m**

Declaration of conformity 2006/42/EC manufactured according to Directive Made in EU

20 000 max. no. of work cycles | endurance test 100% according to EN 13155 | EN 13155 meets the Standard

- Has a rating plate with: manufacturer's mark, CE mark, lifting capacity, factory number, year of production, size and weight
- Adjustable working spacing - WHE hooks mounted in-mounting holes with pins
- Sold with accessories: 2x WHE swivel hook with bearings

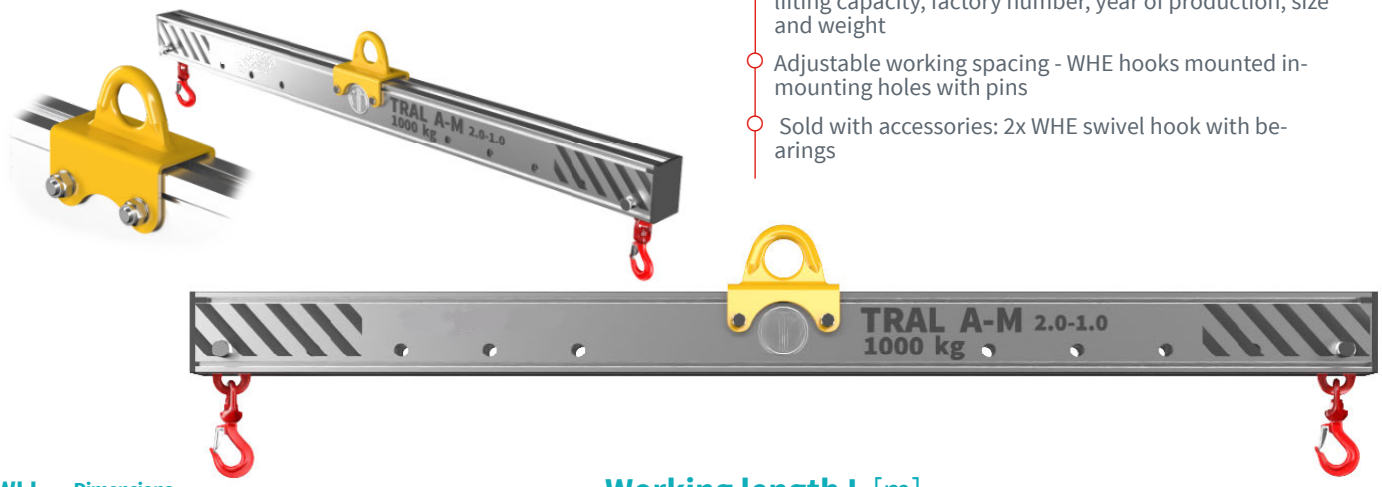


## Working length L [m]

| WLL [t] | Dimensions [mm] | | 0,5 | 1 | 1,5 | 2 | 2,5 | 3 | 3,5 | 4 | 4,5 | 5 | 5,5 | 6 |
|---|---|---|---|---|---|---|---|---|---|---|---|---|---|---|
| 0,25 | A=50 B=150 ØD=65 ØE=26 | Code TRAL A-M | 0.25-0.5 | 0.25-1.0 | 0.25-1.5 | 0.25-2.0 | 0.25-2.5 | 0.25-3.0 | 0.25-3.5 | 0.25-4.0 | 0.25-4.5 | 0.25-5.0 | 0.25-5.5 | 0.25-6.0 |
| | | HR [mm] | 356 | 356 | 356 | 356 | 356 | 356 | 391 | 391 | 391 | 448 | 488 | 488 |
| | | Mass [kg] | 10,5 | 13 | 16 | 18,5 | 21 | 24 | 32,5 | 36 | 39,5 | 53 | 65 | 70 |
| 0,5 | A=50 B=150 ØD=65 ØE=26 | Code TRAL A-M | 0.5-0.5 | 0.5-1.0 | 0.5-1.5 | 0.5-2.0 | 0.5-2.5 | 0.5-3.0 | 0.5-3.5 | 0.5-4.0 | 0.5-4.5 | 0.5-5.0 | 0.5-5.5 | 0.5-6.0 |
| | | HR [mm] | 356 | 356 | 356 | 356 | 391 | 391 | 448 | 448 | 488 | 533 | 533 | 533 |
| | | Mass [kg] | 10,5 | 13 | 16 | 18,5 | 25,5 | 29 | 40 | 44,5 | 55 | 96,5 | 105 | 114 |
| 0,75 | A=50 B=150 ØD=65 ØE=26 | Code TRAL A-M | 0.75-0.5 | 0.75-1.0 | 0.75-1.5 | 0.75-2.0 | 0.75-2.5 | 0.75-3.0 | 0.75-3.5 | 0.75-4.0 | 0.75-4.5 | 0.75-5.0 | 0.75-5.5 | 0.75-6.0 |
| | | HR [mm] | 356 | 356 | 356 | 391 | 391 | 448 | 488 | 488 | 533 | 533 | 533 | 613 |
| | | Mass [kg] | 10,5 | 13 | 16 | 22 | 25,5 | 36 | 45 | 50 | 88 | 96,5 | 105 | 151 |
| 1,0 | A=50 B=150 ØD=65 ØE=26 | Code TRAL A-M | 1.0-0.5 | 1.0-1.0 | 1.0-1.5 | 1.0-2.0 | 1.0-2.5 | 1.0-3.0 | 1.0-3.5 | 1.0-4.0 | 1.0-4.5 | 1.0-5.0 | 1.0-5.5 | |
| | | HR [mm] | 356 | 356 | 391 | 391 | 448 | 488 | 488 | 533 | 533 | 613 | 613 | |
| | | Mass [kg] | 10,5 | 13 | 18,5 | 22 | 32 | 40 | 45 | 79 | 88 | 129 | 140 | |
| 1,25 | A=50 B=150 ØD=65 ØE=26 | Code TRAL A-M | 1.25-0.5 | 1.25-1.0 | 1.25-1.5 | 1.25-2.0 | 1.25-2.5 | 1.25-3.0 | 1.25-3.5 | 1.25-4.0 | 1.25-4.5 | 1.25-5.0 | | |
| | | HR [mm] | 356 | 391 | 391 | 448 | 448 | 488 | 533 | 533 | 533 | 613 | | |
| | | Mass [kg] | 10,5 | 15 | 18,5 | 27,5 | 32 | 40 | 70 | 79 | 88 | 129 | | |
| 1,5 | A=50 B=150 ØD=65 ØE=26 | Code TRAL A-M | 1.5-0.5 | 1.5-1.0 | 1.5-1.5 | 1.5-2.0 | 1.5-2.5 | 1.5-3.0 | 1.5-3.5 | 1.5-4.0 | 1.5-4.5 | 1.5-5.0 | | |
| | | HR [mm] | 391 | 391 | 448 | 448 | 488 | 488 | 533 | 533 | 613 | 613 | | |
| | | Mass [kg] | 11,5 | 15 | 23 | 27,5 | 35 | 40 | 70 | 79 | 116 | 129 | | |
| 1,75 | A=50 B=150 ØD=65 ØE=26 | Code TRAL A-M | 1.75-0.5 | 1.75-1.0 | 1.75-1.5 | 1.75-2.0 | 1.75-2.5 | 1.75-3.0 | 1.75-3.5 | 1.75-4.0 | 1.75-4.5 | | | |
| | | HR [mm] | 391 | 391 | 448 | 488 | 488 | 533 | 533 | 613 | 613 | | | |
| | | Mass [kg] | 11,5 | 15 | 23 | 30 | 35 | 61,5 | 70 | 105,5 | 116 | | | |
| 2,0 | A=50 B=150 ØD=65 ØE=26 | Code TRAL A-M | 2.0-0.5 | 2.0-1.0 | 2.0-1.5 | 2.0-2.0 | 2.0-2.5 | 2.0-3.0 | 2.0-3.5 | 2.0-4.0 | | | | |
| | | HR [mm] | 391 | 391 | 448 | 488 | 533 | 533 | 533 | 613 | | | | |
| | | Mass [kg] | 11,5 | 15 | 23 | 30 | 53 | 61,5 | 70 | 105,5 | | | | |
| 2,5 | A=50 B=150 ØD=65 ØE=26 | Code TRAL A-M | 2.5-0.5 | 2.5-1.0 | 2.5-1.5 | 2.5-2.0 | 2.5-2.5 | 2.5-3.0 | 2.5-3.5 | 2.5-4.0 | | | | |
| | | HR [mm] | 448 | 448 | 488 | 533 | 533 | 533 | 613 | 613 | | | | |
| | | Mass [kg] | 15 | 19 | 25 | 44 | 53 | 61,5 | 95 | 105,5 | | | | |
| 3,0 | A=50 B=150 ØD=65 ØE=26 | Code TRAL A-M | 3.0-0.5 | 3.0-1.0 | 3.0-1.5 | 3.0-2.0 | 3.0-2.5 | 3.0-3.0 | 3.0-3.5 | | | | | |
| | | HR [mm] | 448 | 448 | 488 | 533 | 533 | 613 | 613 | | | | | |
| | | Mass [kg] | 15 | 19 | 25 | 44 | 53 | 84 | 95 | | | | | |
| 3,5 | A=50 B=150 ØD=65 ØE=26 | Code TRAL A-M | 3.5-0.5 | 3.5-1.0 | 3.5-1.5 | 3.5-2.0 | 3.5-2.5 | 3.5-3.0 | | | | | | |
| | | HR [mm] | 533 | 533 | 533 | 533 | 533 | 613 | | | | | | |
| | | Mass [kg] | 18 | 26,5 | 35 | 44 | 53 | 84 | | | | | | |
| 4,0 | A=50 B=150 ØD=65 ØE=26 | Code TRAL A-M | 4.0-0.5 | 4.0-1.0 | 4.0-1.5 | 4.0-2.0 | 4.0-2.5 | 4.0-3.0 | | | | | | |
| | | HR [mm] | 533 | 533 | 533 | 533 | 613 | 613 | | | | | | |
| | | Mass [kg] | 18 | 26,5 | 35 | 44 | 73 | 84 | | | | | | |

## Spacing of mounting points [m] for individual working lengths of the TRS A-M lifting beam [m]

| Working lenght L [m] | 0,5 | 1 | 1,5 | 2 | 2,5 | 3 | 3,5 | 4 | 4,5 | 5 | 5,5 | 6 |
|---|---|---|---|---|---|---|---|---|---|---|---|---|
| | 0,4 | 0,9 | 1,4 | 1,9 | 2,4 | 2,9 | 3,4 | 3,9 | 4,4 | 4,9 | 5,4 | 5,9 |
| | | 0,6 | 1,1 | 1,6 | 2,1 | 2,6 | 3,1 | 3,6 | 4,1 | 4,6 | 5,1 | 5,6 |
| | | | 0,8 | 1,3 | 1,8 | 2,3 | 2,8 | 3,3 | 3,8 | 4,3 | 4,8 | 5,3 |
| | | | | 1 | 1,5 | 2 | 2,5 | 3 | 3,5 | 4 | 4,5 | 5 |
| | | | | 0,7 | 1,2 | 1,7 | 2,2 | 2,7 | 3,2 | 3,7 | 4,2 | 4,7 |
| | | | | 0,9 | 1,4 | 1,9 | 2,4 | 2,9 | 3,4 | 3,9 | 4,4 | |
| | | | | | 1,1 | 1,6 | 2,1 | 2,6 | 3,1 | 3,6 | 4,1 | |
| | | | | | | 1,3 | 1,8 | 2,3 | 2,8 | 3,3 | 3,8 | |
| | | | | | | | | 2 | 2,5 | 3 | 3,5 | |
| | | | | | | | | | 2,2 | 2,7 | 3,2 | |
| | | | | | | | | | | 2,4 | 2,9 | |
| | | | | | | | | | | | 2,6 | |

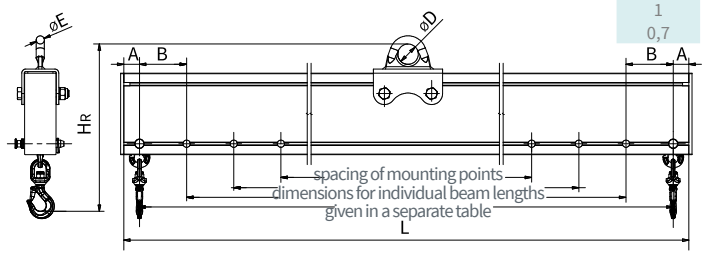


MBEA-2412 v.03

DECORLUX
HIJSTECHNIEK
TECHNIQUE LEVAGE
HEBETECHNIK
LIFTING TECHNICS




# Spreader beams

- Modular
- Standard
- Delta spreader Plate

# DxL-TS

## Modular spreader beam

load WLL **6-170 t**

**1-24 m**

CE Declaration of conformity 2006/42/EC manufactured according to Directive — Made in EU

20 000 max. no. of work cycles — endurance test 100% according to EN 13155 — EN 13155 meets the Standard

- Has a rating plate with: manufacturer's mark, CE mark, lifting capacity, factory number, year of production, size and weight
- Working spacing adjustable by combining modules of different lengths
- Sold with accessories in the form of four shackles on end modules and a set of connecting screws
- Designed to work with a 2-leg sling
- Maximum angle of deviation from the vertical - 45°




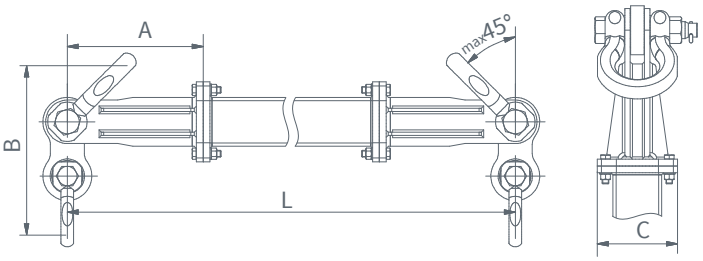


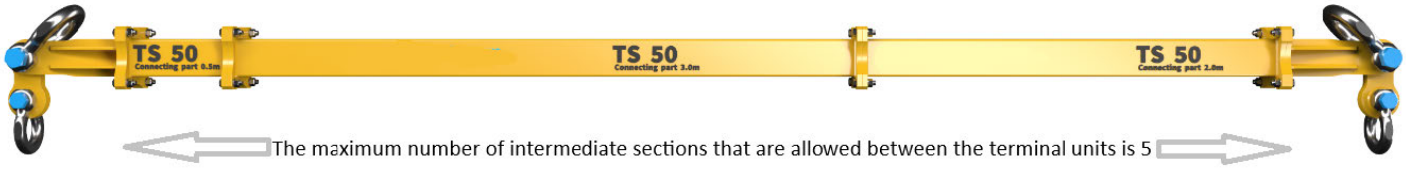


The maximum number of intermediate sections that are allowed between the terminal units is 5

| | TS 170 | | TS 70 | | TS 50 | | TS 34 | | TS 19 | | TS 12 | | TS 6 | |
|---|---|---|---|---|---|---|---|---|---|---|---|---|---|---|
| **WLL (max):** | **170[t]** | | **70[t]** | | **50[t]** | | **34[t]** | | **19[t]** | | **12[t]** | | **6[t]** | |
| **L max** | **24m** | | **20m** | | **16m** | | **14m** | | **9m** | | **7m** | | **4,5m** | |
| **Intermediate Connecting Parts** | **L** | Mass/Pcs | **L** | Mass/Pcs | **L** | Mass/Pcs | **L** | Mass/Pcs | **L** | Mass/Pcs | **L** | Mass/Pcs | **L** | Mass/Pcs |
| | **6,0m** | 744Kg | **6,0m** | 363Kg | | | | | | | | | | |
| | **4,0m** | 532Kg | **4,0m** | 258Kg | **4,0m** | 198Kg | **4,0m** | 137Kg | **4,0m** | 65Kg | | | | |
| | **3,0m** | 426Kg | **3,0m** | 205Kg | **3,0m** | 156Kg | **3,0m** | 107Kg | **3,0m** | 50Kg | | | | |
| | **2,0m** | 320Kg | **2,0m** | 152Kg | **2,0m** | 113Kg | **2,0m** | 77Kg | **2,0m** | 35,5Kg | **2,0m** | 30Kg | **2,0m** | 22Kg |
| | **1,0m** | 214Kg | **1,0m** | 100Kg | **1,0m** | 70Kg | **1,0m** | 47Kg | **1,0m** | 21Kg | **1,0m** | 17Kg | **1,0m** | 12Kg |
| | **0,5m** | 161Kg | **0,5m** | 73Kg | **0,5m** | 49Kg | **0,5m** | 32Kg | **0,5m** | 13,5Kg | **0,5m** | 10Kg | **0,5m** | 7Kg |
| | | | | | | | | | **0,25m** | 10Kg | **0,25m** | 7Kg | **0,25m** | 4Kg |
| **Terminal Unit** | **1,0m** | 281Kg | **0,5m** | 72Kg | **0,5m** | 53Kg | **0,25m** | 35Kg | **0,25m** | 9,5Kg | **0,25m** | 6,5Kg | **0,25m** | 4Kg |
| Dimensions /mm | | | | | | | | | | | | | | |
| A | 1000 | | 600 | | 500 | | 500 | | 250 | | 250 | | 250 | |
| B (30°) | 1019 | | 805 | | 618 | | 493 | | 404 | | 312 | | 203 | |
| B (45°) | 953 | | 748 | | 579 | | 461 | | 378 | | 293 | | 190 | |
| C | 490 | | 350 | | 295 | | 260 | | 178 | | 148 | | 120 | |
| **Connectors** | 95Kg | | 25Kg | | 20Kg | | 11Kg | | 5Kg | | 2,5Kg | | 0,8Kg | |
| **Type Upper shackles** | **AM120** | 120Kg | **AM55** | 45Kg | **AM42,5** | 33Kg | **AM25** | 16Kg | **AM17** | 10Kg | **AM9,5** | 4Kg | **AM4,75** | 1,3Kg |
| **Type Lower shackles** | **AM85** | 70Kg | **AM35** | 24Kg | **AM25** | 16Kg | **AM17** | 10Kg | **AM9,5** | 4Kg | **AM6,5** | 2Kg | **AM3,25** | 0,8Kg |
| **Mounting screws** | **M24x90 - 10.9** | | **M24x90 - 8.8** | | **M24x90- 8.8** | | **M20x80 8.8** | | **M16x65 8.8** | | **M12x50 8.8** | | **M12x50 8.8** | |

TS spreader beams can be combined into sets

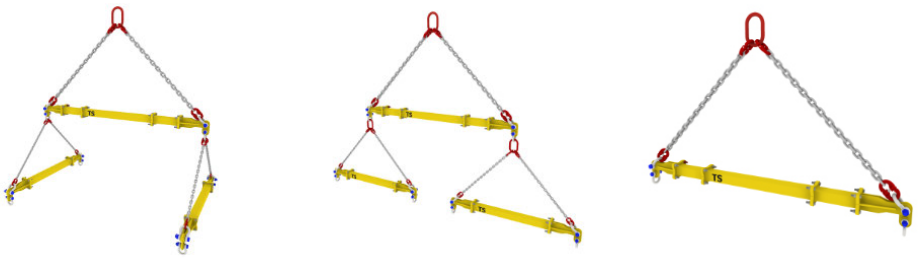

# DxL-TS

## Modular spreader beam - load capacity table

CE Declaration of conformity | 2006/42/EC manufactured according to Directive | Made in EU

20 000 max. no. of work cycles | endurance test 100% according to EN 13155 | EN 13155 meets the Standard

load WLL **6-170 t** | **1-24 m**

- Has a rating plate with: manufacturer's mark, CE mark, lifting capacity, factory number, year of production, size and weight
- Working spacing adjustable by combining modules of different lengths
- Sold with accessories in the form of four shackles on end modules and a set of connecting screws
- Designed to work with a 2-leg sling
- Maximum angle of deviation from the vertical - 45°)

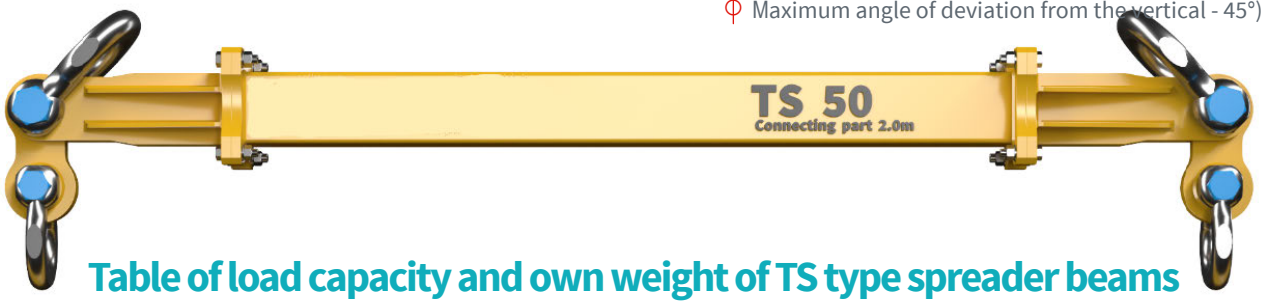


## Table of load capacity and own weight of TS type spreader beams

| Length | TS 170 WLL [t] | | mass | TS 70 WLL [t] | | mass | TS 50 WLL [t] | | mass | TS 34 WLL [t] | | mass | TS 19 WLL [t] | | mass | TS 12 WLL [t] | | mass | TS 6 WLL [t] | | mass |
|---|---|---|---|---|---|---|---|---|---|---|---|---|---|---|---|---|---|---|---|---|---|
| L [m] | 45° | 30° | max [kg] | 45° | 30° | max [kg] | 45° | 30° | max [kg] | 45° | 30° | max [kg] | 45° | 30° | max [kg] | 45° | 30° | max [kg] | 45° | 30° | max [kg] |
| 0,5 | — | — | — | — | — | — | — | — | — | — | — | — | 19 | 19 | 54 | 12 | 12 | 25 | 6 | 6 | 14 |
| 1,0 | — | — | — | 70 | 70 | 308 | 50 | 50 | 238 | 34 | 34 | 138 | 19 | 19 | 74 | 12 | 12 | 42 | 6 | 6 | 23 |
| 1,5 | — | — | — | 70 | 70 | 381 | 50 | 50 | 287 | 34 | 34 | 170 | 19 | 19 | 94 | 12 | 12 | 56 | 6 | 6 | 32 |
| 2,0 | 170 | 170 | 1 102 | 70 | 70 | 454 | 50 | 50 | 336 | 34 | 34 | 202 | 19 | 19 | 108 | 12 | 12 | 66 | 6 | 6 | 39 |
| 2,5 | 170 | 170 | 1 263 | 70 | 70 | 527 | 50 | 50 | 385 | 34 | 34 | 234 | 19 | 19 | 115 | 12 | 12 | 72 | 6 | 6 | 44 |
| 3,0 | 170 | 170 | 1 424 | 70 | 70 | 600 | 50 | 50 | 434 | 34 | 34 | 266 | 19 | 19 | 122 | 12 | 12 | 78 | 6 | 6 | 49 |
| 3,5 | 170 | 170 | 1 585 | 70 | 70 | 673 | 50 | 50 | 483 | 34 | 34 | 298 | 19 | 19 | 129 | 12 | 12 | 85 | 6 | 6 | 54 |
| 4,0 | 170 | 170 | 1 746 | 70 | 70 | 700 | 50 | 50 | 504 | 34 | 34 | 313 | 15 | 19 | 137 | 11 | 12 | 92 | 5 | 6 | 59 |
| 4,5 | 170 | 170 | 1 907 | 70 | 70 | 727 | 50 | 50 | 525 | 34 | 34 | 328 | 12 | 19 | 144 | 9 | 12 | 99 | 4 | 6 | 64 |
| 5,0 | 170 | 170 | 1 960 | 70 | 70 | 754 | 50 | 50 | 546 | 34 | 34 | 343 | 10 | 17 | 152 | 7 | 12 | 106 | 3 | 5 | 69 |
| 5,5 | 170 | 170 | 2 013 | 70 | 70 | 781 | 50 | 50 | 567 | 34 | 34 | 358 | 8 | 14 | 159 | 6 | 10 | 113 | | | |
| 6,0 | 170 | 170 | 2 066 | 70 | 70 | 808 | 50 | 50 | 588 | 34 | 34 | 373 | 7 | 12 | 166 | 5 | 9 | 119 | | | |
| 6,5 | 170 | 170 | 2 119 | 70 | 70 | 833 | 50 | 50 | 610 | 30 | 34 | 388 | 5,5 | 10 | 174 | 4 | 7 | 126 | | | |
| 7,0 | 170 | 170 | 2 172 | 70 | 70 | 860 | 45 | 50 | 631 | 26 | 34 | 403 | 5 | 8 | 181 | 3,5 | 6 | 132 | | | |
| 7,5 | 170 | 170 | 2 225 | 67 | 70 | 885 | 38 | 50 | 653 | 23 | 34 | 418 | 4 | 7 | 188 | | | | | | |
| 8,0 | 170 | 170 | 2 278 | 60 | 70 | 912 | 35 | 50 | 674 | 20 | 34 | 433 | 3,5 | 6 | 195 | | | | | | |
| 8,5 | 170 | 170 | 2 331 | 54 | 70 | 937 | 31 | 50 | 696 | 18 | 31 | 448 | 3 | 5 | 203 | | | | | | |
| 9,0 | 170 | 170 | 2 384 | 49 | 70 | 964 | 27 | 48 | 717 | 16 | 27 | 463 | 2,5 | 4,5 | 210 | | | | | | |
| 9,5 | 170 | 170 | 2 437 | 44 | 70 | 989 | 24 | 43 | 739 | 14 | 24 | 478 | | | | | | | | | |
| 10,0 | 170 | 170 | 2 490 | 40 | 69 | 1 016 | 22 | 38 | 760 | 12 | 22 | 493 | | | | | | | | | |
| 10,5 | 160 | 170 | 2 543 | 36 | 62 | 1 043 | 20 | 34 | 781 | 11 | 19 | 508 | | | | | | | | | |
| 11,0 | 150 | 170 | 2 596 | 32 | 56 | 1 070 | 18 | 31 | 802 | 10 | 17 | 523 | | | | | | | | | |
| 11,5 | 141 | 170 | 2 649 | 29 | 51 | 1 095 | 16 | 28 | 823 | 9 | 16 | 538 | | | | | | | | | |
| 12,0 | 132 | 170 | 2 702 | 27 | 47 | 1 122 | 14 | 25 | 844 | 8 | 14 | 553 | | | | | | | | | |
| 12,5 | 123 | 170 | 2 755 | 24 | 42 | 1 149 | 13 | 23 | 866 | 7 | 13 | 568 | | | | | | | | | |
| 13,0 | 115 | 170 | 2 808 | 22 | 39 | 1 176 | 12 | 21 | 887 | 6,5 | 11 | 583 | | | | | | | | | |
| 13,5 | 108 | 170 | 2 861 | 20 | 35 | 1 201 | 11 | 19 | 909 | 6 | 10 | 598 | | | | | | | | | |
| 14,0 | 100 | 170 | 2 914 | 18 | 32 | 1 228 | 10 | 17 | 930 | 5,5 | 9 | 613 | | | | | | | | | |
| 14,5 | 94 | 162 | 2 967 | 17 | 30 | 1 255 | 9 | 16 | 951 | | | | | | | | | | | | |
| 15,0 | 88 | 152 | 3 020 | 15 | 27 | 1 282 | 8 | 14 | 971 | | | | | | | | | | | | |
| 15,5 | 82 | 142 | 3 073 | 14 | 25 | 1 307 | 7,5 | 13 | 994 | | | | | | | | | | | | |
| 16,0 | 76 | 133 | 3 126 | 13 | 23 | 1 334 | 7 | 12 | 1 015 | | | | | | | | | | | | |
| 16,5 | 71 | 124 | 3 179 | 12 | 21 | 1 360 | | | | | | | | | | | | | | | |
| 17,0 | 67 | 116 | 3 232 | 11 | 19 | 1 387 | | | | | | | | | | | | | | | |
| 17,5 | 63 | 109 | 3 285 | 10 | 18 | 1 413 | | | | | | | | | | | | | | | |
| 18,0 | 59 | 102 | 3 338 | 9,5 | 16 | 1 440 | | | | | | | | | | | | | | | |
| 18,5 | 55 | 96 | 3 391 | 9 | 15 | 1 465 | | | | | | | | | | | | | | | |
| 19,0 | 52 | 90 | 3 444 | 8 | 14 | 1 492 | | | | | | | | | | | | | | | |
| 19,5 | 48 | 84 | 3 497 | 7,5 | 13 | 1 518 | | | | | | | | | | | | | | | |
| 20,0 | 45 | 79 | 3 550 | 7 | 12 | 1 545 | | | | | | | | | | | | | | | |
| 20,5 | 43 | 74 | 3 603 | | | | | | | | | | | | | | | | | | |
| 21,0 | 40 | 70 | 3 656 | | | | | | | | | | | | | | | | | | |
| 21,5 | 38 | 66 | 3 709 | | | | | | | | | | | | | | | | | | |
| 22,0 | 35 | 62 | 3 762 | | | | | | | | | | | | | | | | | | |
| 22,5 | 33 | 58 | 3 815 | | | | | | | | | | | | | | | | | | |
| 23,0 | 31 | 55 | 3 868 | | | | | | | | | | | | | | | | | | |
| 23,5 | 30 | 52 | 3 921 | | | | | | | | | | | | | | | | | | |
| 24,0 | 28 | 49 | 3 974 | | | | | | | | | | | | | | | | | | |






- The WLL value depends on the length of the traverse and the angle of the sling at which the beam is suspended
- The maximum number of connecting parts allowed between end members is 5

# DxL-TPC

## Spreader beam

Declaration of conformity 2006/42/EC manufactured according to Directive — Made in EU

-10+50°C working temperature — EN 13155 meets the Standard

load WLL 60 t — 2-8 m







- Has a rating plate with: manufacturer's mark, CE mark, lifting capacity, factory number, year of production, size and weight
- Working span adjustable with a stroke of 250 mm, individual working positions locked with a pin secured with a cotter pin
- Spreader beam sold without removable accessories (i.e. without slings, hooks, shackles, connectors, etc.)
- Designed to work with a 2-leg sling (maximum angle of deviation from the vertical - 45°)




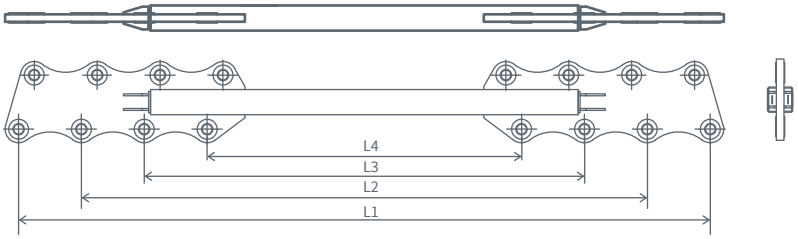


| Code | WLL [kg] | Working range L [m] |
|---|---|---|
| TPC 060.0 - 03.0 | 60 000 | 3,0 - 2,0 |
| TPC 060.0 - 05.5 | 60 000 | 5,5 - 2,5 |
| TPC 060.0 - 08.0 | 60 000 | 8,0 - 3,0 |

# TP Spreader beam

Declaration of conformity 2006/42/EC manufactured according to Directive — Made in EU

-10+50°C working temperature — EN 13155 meets the Standard

load WLL 2,8-50 t — 1-8 m

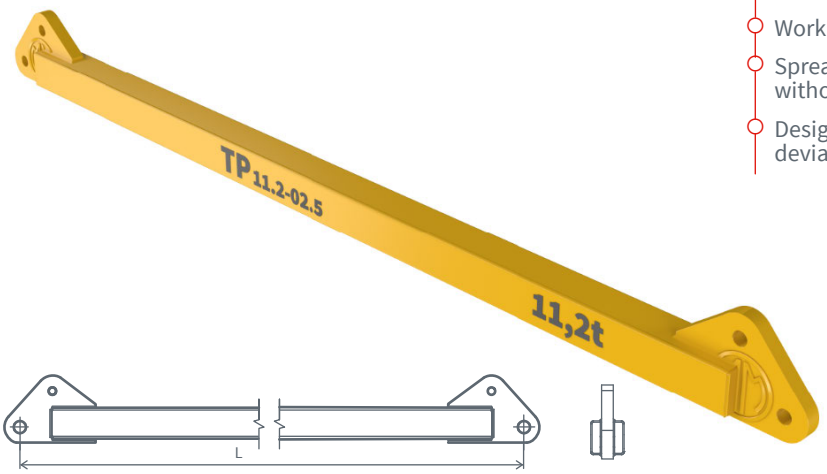





- Has a rating plate with: manufacturer's mark, CE mark, lifting capacity, factory number, year of production, size and weight
- Working span fixed
- Spreader beam sold without removable accessories (i.e. without slings, hooks, shackles, connectors, etc.)
- Designed to work with a 2-leg sling (maximum angle of deviation from the vertical - 45°)

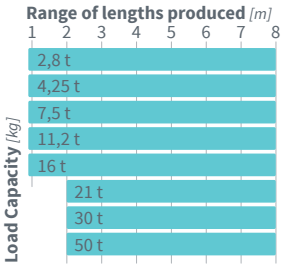


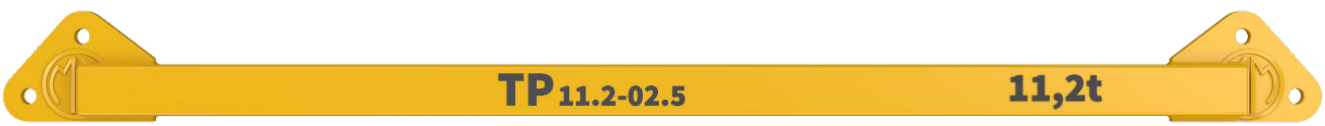

# DxL-TPO-A Delta spreader Plate

CE Declaration of conformity 2006/42/EC manufactured according to Directive Made in EU

-10+50°C working temperature EN 13155 meets the Standard

load WLL 3-110 t

0,45-0,9 m



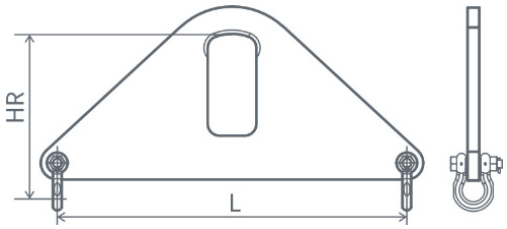


- Has a rating plate with: manufacturer's mark, CE mark, lifting capacity, factory number, year of production, size and weight
- Working span fixed
- Spreader beam sold with accessories (i.e. two BX type shackles)

| Code | WLL [t] | Working range L [mm] | Usable height HR [mm] | Ear dimensions [mm] | Shackle type |
|---|---|---|---|---|---|
| TPO-A 003.0-0.45 | 3 | 450 | 300 | 130x75 | UBX 3,25 |
| TPO-A 003.0-0.9 | 3 | 900 | 300 | 130x75 | UBX 3,25 |
| TPO-A 013.0-0.45 | 13 | 450 | 500 | 230x130 | UBX 6,5 |
| TPO-A 013.0-0.9 | 13 | 900 | 500 | 230x130 | UBX 6,5 |
| TPO-A 024.0-0.45 | 24 | 450 | 600 | 300x150 | UBX 12 |
| TPO-A 024.0-0.9 | 24 | 900 | 600 | 300x150 | UBX 12 |
| TPO-A 034.0-0.45 | 34 | 450 | 800 | 340x180 | UBX 17 |
| TPO-A 034.0-0.9 | 34 | 900 | 800 | 340x180 | UBX 17 |
| TPO-A 050.0-0.45 | 50 | 450 | 900 | 400x190 | UBX 25 |
| TPO-A 050.0-0.9 | 50 | 900 | 900 | 400x190 | UBX 25 |
| TPO-A 070.0-0.45 | 70 | 450 | 1 100 | 450x200 | UBX 35 |
| TPO-A 070.0-0.9 | 70 | 900 | 1 100 | 450x200 | UBX 35 |
| TPO-A 110.0-0.45 | 110 | 450 | 1 200 | 500x220 | UBX 55 |
| TPO-A 110.0-0.9 | 110 | 900 | 1 200 | 500x220 | UBX 55 |

# TPO-B Plate spreader beam

CE Declaration of conformity 2006/42/EC manufactured according to Directive Made in EU

-10+50°C working temperature EN 13155 meets the Standard

load WLL 3-110 t

0,45-0,9 m

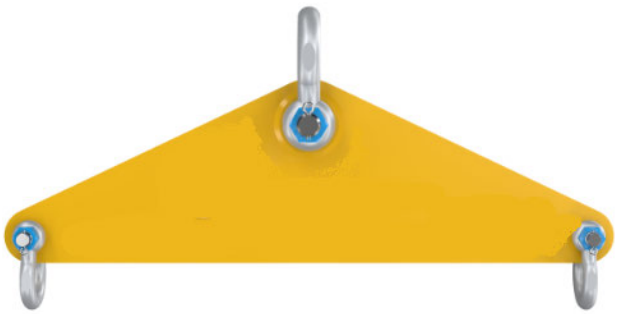

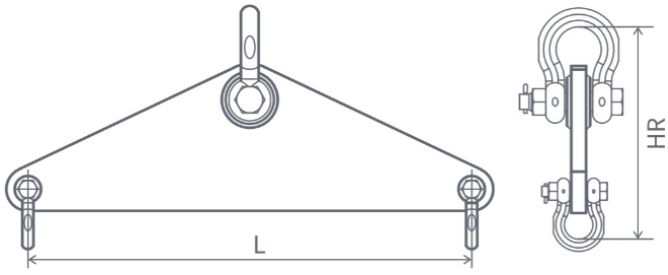


- Has a rating plate with: manufacturer's mark, CE mark, lifting capacity, factory number, year of production, size and weight
- Working span fixed
- Spreader beam sold with accessories (i.e. three BX type shackles)

| Code | WLL [t] | Working range L [mm] | Usable height HR [mm] | Top shackle type | Lower shackle type |
|---|---|---|---|---|---|
| TPO-B 003.0-0.45 | 3 | 450 | 250 | UBX 3,25 | UBX 3,25 |
| TPO-B 003.0-0.9 | 3 | 900 | 250 | UBX 3,25 | UBX 3,25 |
| TPO-B 013.0-0.45 | 13 | 450 | 450 | UBX 13,5 | UBX 6,5 |
| TPO-B 013.0-0.9 | 13 | 900 | 450 | UBX 13,5 | UBX 6,5 |
| TPO-B 024.0-0.45 | 24 | 450 | 550 | UBX 25 | UBX 12 |
| TPO-B 024.0-0.9 | 24 | 900 | 550 | UBX 25 | UBX 12 |
| TPO-B 034.0-0.45 | 34 | 450 | 750 | UBX 35 | UBX 17 |
| TPO-B 034.0-0.9 | 34 | 900 | 750 | UBX 35 | UBX 17 |
| TPO-B 050.0-0.45 | 50 | 450 | 850 | UBX 55 | UBX 25 |
| TPO-B 050.0-0.9 | 50 | 900 | 850 | UBX 55 | UBX 25 |
| TPO-B 070.0-0.45 | 70 | 450 | 1 050 | UBX 85 | UBX 35 |
| TPO-B 070.0-0.9 | 70 | 900 | 1 050 | UBX 85 | UBX 35 |
| TPO-B 110.0-0.45 | 110 | 450 | 1 150 | UBX 120 | UBX 55 |
| TPO-B 110.0-0.9 | 110 | 900 | 1 150 | UBX 120 | UBX 55 |

DECORLUX
HIJSTECHNIEK
TECHNIQUE LEVAGE
HEBETECHNIK
LIFTING TECHNICS



# Adjustable spreader beams

# DxL-TPR

## Telescopic spreader beam with adjustable span

CE Declaration of conformity 2006/42/EC manufactured according to Directive Made in EU

-10+50°C working temperature EN 13155 meets the Standard

load WLL 2,8-30 t 1,1-8 m

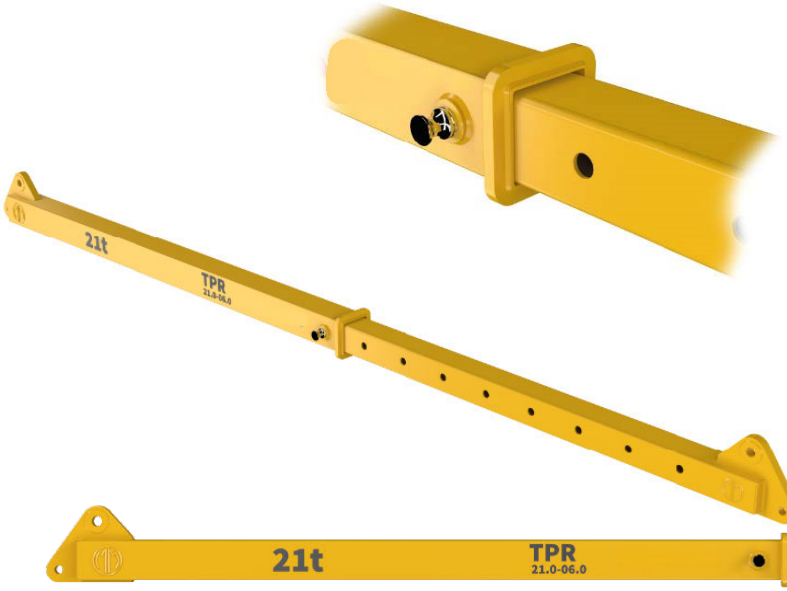


- Has a rating plate with: manufacturer's mark, CE mark, lifting capacity, factory number, year of production, size and weight
- Working length adjustable with a stroke of 287.5mm
- Sold without accessories (i.e. without slings, hooks, shackles, etc.)
- Designed to work with a 2-leg sling (maximum angle of deviation from the vertical - 45°)

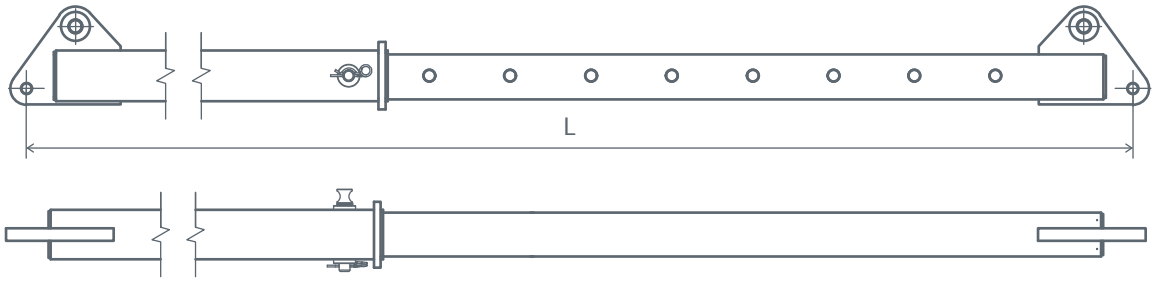


| Code | WLL | Working length L |
|---|---|---|
| | [kg] | [m] |
| **TPR 02.8 - 01.5** | 2 800 | 1,5 - 1,1 |
| **TPR 02.8 - 02.0** | 2 800 | 2,0 - 1,35 |
| **TPR 02.8 - 03.0** | 2 800 | 3,0 - 1,9 |
| **TPR 02.8 - 04.0** | 2 800 | 4,0 - 2,4 |
| **TPR 02.8 - 05.0** | 2 800 | 5,0 - 3,0 |
| **TPR 02.8 - 06.0** | 2 800 | 6,0 - 3,5 |
| **TPR 02.8 - 07.0** | 2 800 | 7,0 - 4,5 |
| **TPR 02.8 - 08.0** | 2 800 | 8,0 - 5,0 |
| | | |
| **TPR 04.25 - 01.2** | 4 250 | 1,2 - 0,8 |
| **TPR 04.25 - 01.5** | 4 250 | 1,5 - 1,2 |
| **TPR 04.25 - 02.5** | 4 250 | 2,5 - 1,7 |
| **TPR 04.25 - 03.0** | 4 250 | 3,0 - 2,0 |
| **TPR 04.25 - 03.5** | 4 250 | 3,5 - 2,2 |
| **TPR 04.25 - 04.0** | 4 250 | 4,0 - 2,45 |
| **TPR 04.25 - 05.0** | 4 250 | 5,0 - 3,0 |
| **TPR 04.25 - 06.0** | 4 250 | 6,0 - 3,6 |
| **TPR 04.25 - 07.0** | 4 250 | 7,0 - 4,5 |
| **TPR 04.25 - 08.0** | 4 250 | 8,0 - 5,0 |

| Code | WLL | Working length L |
|---|---|---|
| | [kg] | [m] |
| **TPR 07.5 - 01.0** | 7 500 | 1,0 - 0,8 |
| **TPR 07.5 - 02.0** | 7 500 | 2,0 - 1,45 |
| **TPR 07.5 - 03.0** | 7 500 | 3,0 - 2,0 |
| **TPR 07.5 - 03.5** | 7 500 | 3,5 - 2,25 |
| **TPR 07.5 - 04.0** | 7 500 | 4,0 - 2,5 |
| **TPR 07.5 - 04.4** | 7 500 | 4,4 - 2,8 |
| **TPR 07.5 - 05.0** | 7 500 | 5,0 - 3,0 |
| **TPR 07.5 - 06.0** | 7 500 | 6,0 - 3,6 |
| **TPR 07.5 - 07.0** | 7 500 | 7,0 - 4,5 |
| **TPR 07.5 - 08.0** | 7 500 | 8,0 - 5,0 |
| | | |
| **TPR 11.2 - 01.0** | 11 200 | 2,0 - 1,6 |
| **TPR 11.2 - 03.0** | 11 200 | 3,0 - 2,0 |
| **TPR 11.2 - 03.0** | 11 200 | 3,0 - 2,05 |
| **TPR 11.2 - 03.5** | 11 200 | 3,5 - 2,3 |
| **TPR 11.2 - 04.0** | 11 200 | 4,0 - 2,6 |
| **TPR 11.2 - 05.0** | 11 200 | 5,0 - 3,05 |
| **TPR 11.2 - 06.0** | 11 200 | 6,0 - 3,6 |
| **TPR 11.2 - 07.0** | 11 200 | 7,0 - 4,5 |
| **TPR 11.2 - 08.0** | 11 200 | 8,0 - 5,0 |

| Code | WLL | Working length L |
|---|---|---|
| | [kg] | [m] |
| **TPR 16.0 - 01.0** | 16 000 | 2,0 - 1,6 |
| **TPR 16.0 - 02.5** | 16 000 | 2,5 - 1,6 |
| **TPR 16.0 - 03.0** | 16 000 | 3,0 - 2,0 |
| **TPR 16.0 - 03.8** | 16 000 | 3,8 - 2,35 |
| **TPR 16.0 - 05.0** | 16 000 | 5,0 - 3,05 |
| **TPR 16.0 - 06.0** | 16 000 | 6,0 - 3,7 |
| **TPR 16.0 - 07.0** | 16 000 | 7,0 - 4,5 |
| **TPR 16.0 - 08.0** | 16 000 | 8,0 - 4,7 |
| | | |
| **TPR 21.0 - 02.0** | 21 000 | 2,0 - 1,7 |
| **TPR 21.0 - 03.0** | 21 000 | 3,0 - 2,0 |
| **TPR 21.0 - 04.0** | 21 000 | 4,0 - 2,6 |
| **TPR 21.0 - 05.0** | 21 000 | 5,0 - 3,0 |
| **TPR 21.0 - 06.0** | 21 000 | 6,0 - 3,7 |
| **TPR 21.0 - 07.0** | 21 000 | 7,0 - 4,5 |
| **TPR 21.0 - 08.0** | 21 000 | 8,0 - 5,0 |
| | | |
| **TPR 30.0 - 02.0** | 30 000 | 2,0 - 1,7 |
| **TPR 30.0 - 03.0** | 30 000 | 3,0 - 2,1 |
| **TPR 30.0 - 04.5** | 30 000 | 4,5 - 2,8 |
| **TPR 30.0 - 05.0** | 30 000 | 5,0 - 3,0 |
| **TPR 30.0 - 06.0** | 30 000 | 6,0 - 3,75 |
| **TPR 30.0 - 07.0** | 30 000 | 7,0 - 4,5 |
| **TPR 30.0 - 08.0** | 30 000 | 8,0 - 5,0 |

# DxL-TPR-L

## Telescopic spreader beam with adjustable span

CE Declaration of conformity 2006/42/EC manufactured according to Directive Made in EU

-10+50°C working temperature EN 13155 meets the Standard

load WLL 30 t

4-7 m




- Has a rating plate with: manufacturer's mark, CE mark, lifting capacity, factory number, year of production, size and weight
- Working length adjustable with a stroke of 250mm, individual working positions locked with a pin secured with a cotter pin
- Sold without accessories (i.e. without slings, hooks, shackles, etc.)
- Designed to work with a 2-leg sling (maximum angle of deviation from the vertical - 45°)
- Equipped with a full extension lock for the internal profile
- Equipped with ball-bearing rollers that make it easier to slide the internal profile in and out
- Equipped with an integrated base for easy storage or parking between operations

| Code | WLL [kg] | Working length L [m] |
|---|---|---|
| TPR-L 30.0 - 07.0 | 30 000 | 4,0 - 7,0 |




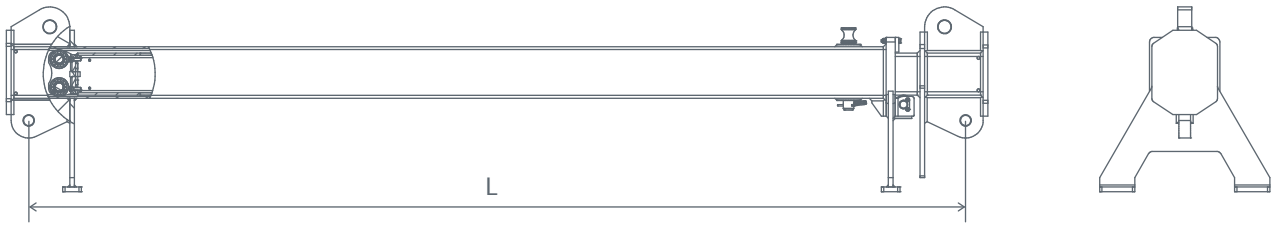


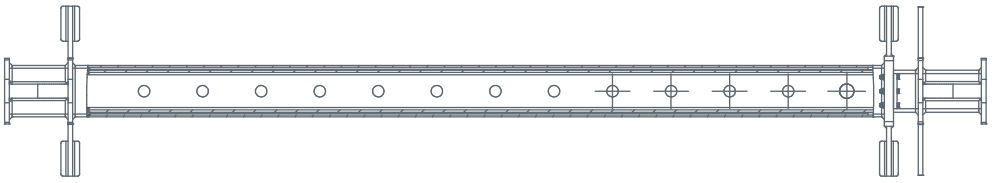

# DxL-TPR-S

## Spreader beam with adjustable span

Declaration of conformity 2006/42/EC manufactured according to Directive Made in EU

-10+50°C working temperature EN 13155 meets the Standard

load WLL 2,8 t

0,5-3 m

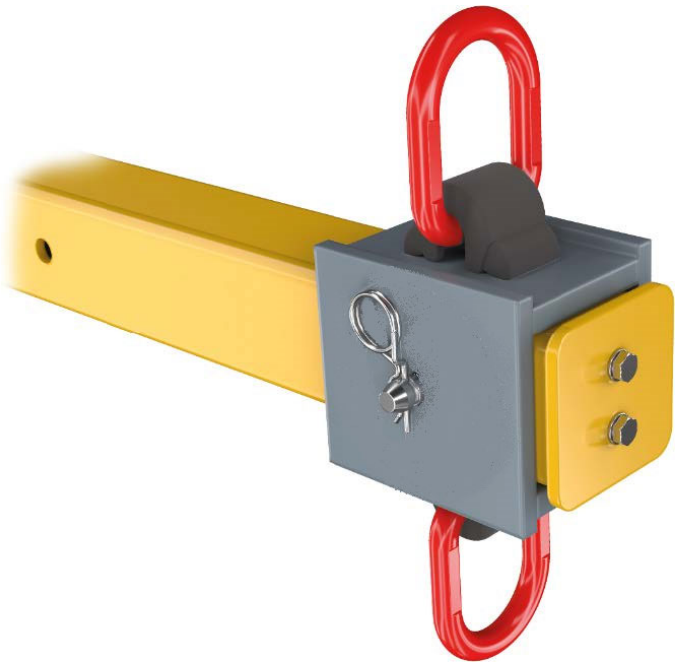

- Has a rating plate with: manufacturer's mark, CE mark, lifting capacity, factory number, year of production, size and weight
- Working length adjustable with a stroke of 250mm, individual working positions locked with a pin secured with a cotter pin
- Sold without accessories (i.e. without slings, hooks, shackles, etc.)
- Designed to work with a 2-leg sling (maximum angle of deviation from the vertical - 45°)

| Code | WLL [kg] | Working length L [m] |
|---|---|---|
| TPR-S 02.8 - 03.0 | 2 800 | 0,5 - 3 |

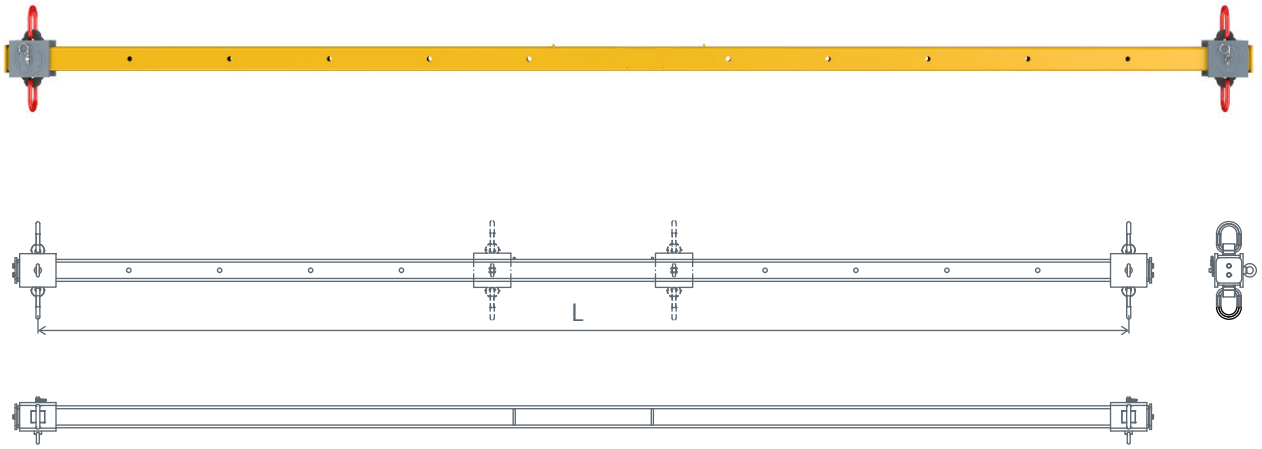

# DxL-TPR-T

## Telescopic spreader beam with adjustable span

CE Declaration of conformity 2006/42/EC manufactured according to Directive Made in EU

-10+50°C working temperature EN 13155 meets the Standard

load WLL 25 t

2,6-5,5 m

- Has a rating plate with: manufacturer's mark, CE mark, lifting capacity, factory number, year of production, size and weight
- Working length adjustable with a stroke of 250mm, individual working positions locked with a pin secured with a cotter pin
- Sold without accessories (i.e. without slings, hooks, shackles, etc.)
- Designed to work with a 2-leg sling (maximum angle of deviation from the vertical - 45°)
- Equipped with a full extension lock for the internal profile

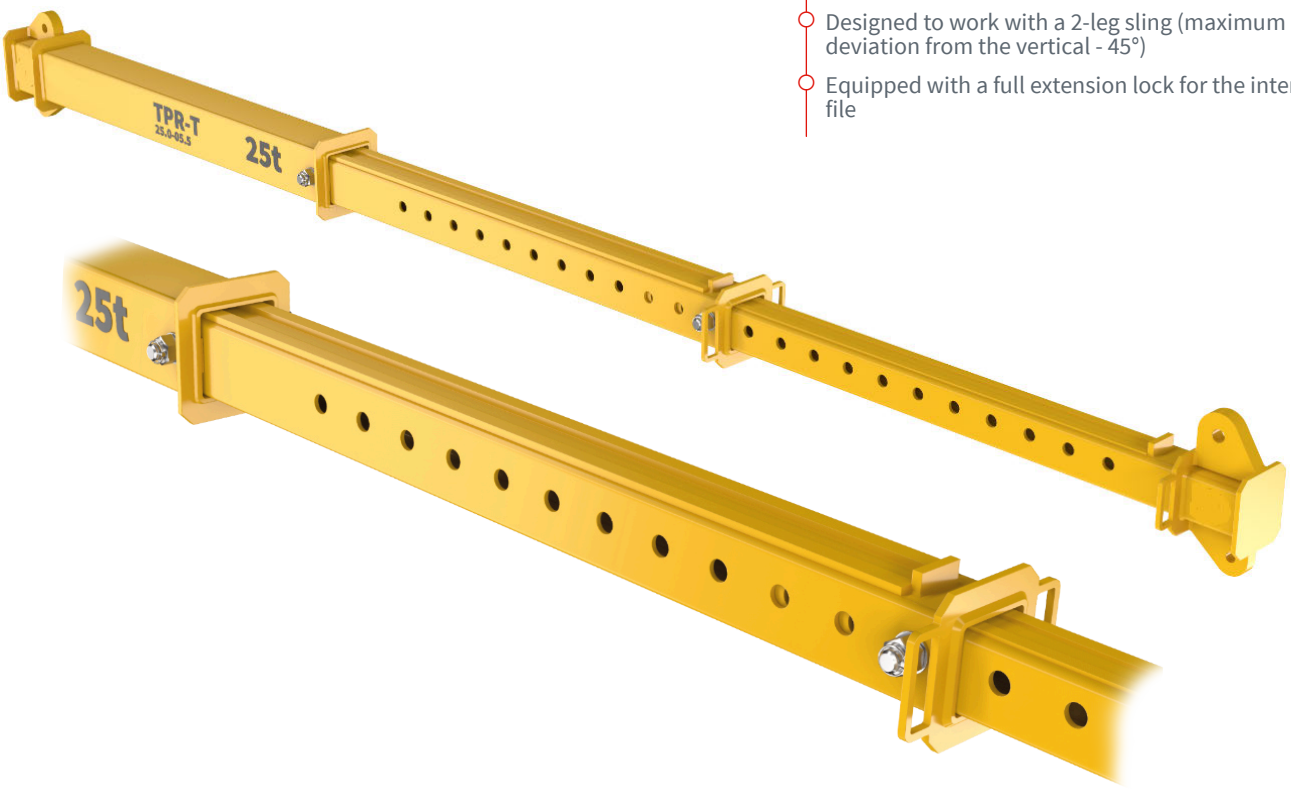


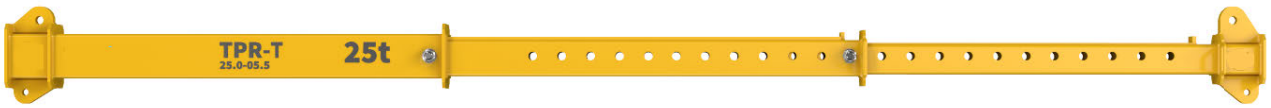


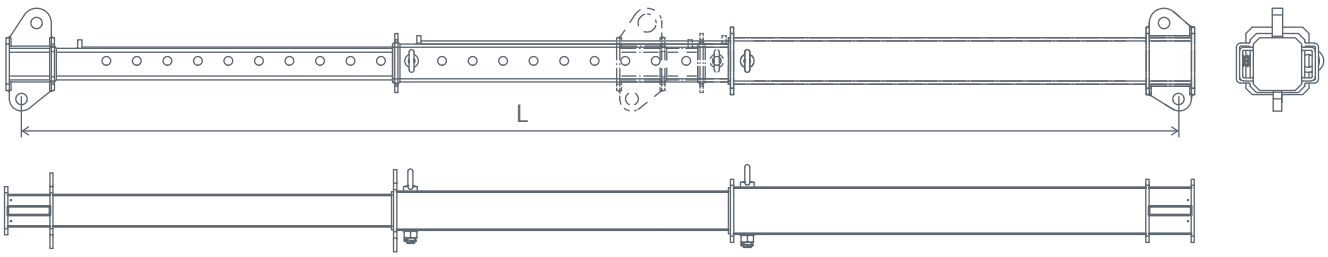


| Code | WLL | Working length L |
|---|---|---|
| | *[kg]* | *[m]* |
| **TPR-T 25.0 - 05.5** | 25 000 | 2,6 - 5,5 |

# DxL-TPR-W

## Telescopic spreader beam with adjustable span

Declaration of conformity 2006/42/EC manufactured according to Directive Made in EU

-10+50°C working temperature EN 13155 meets the Standard

load WLL 6-10 t

2-6 m

- Has a rating plate with: manufacturer's mark, CE mark, lifting capacity, factory number, year of production, size and weight
- Working length adjustable with a stroke of 250mm, individual working positions locked with a pin secured with a cotter pin
- Sold without accessories (i.e. without slings, hooks, shackles, etc.)
- Designed to work with a 2-leg sling (maximum angle of deviation from the vertical - 45°)
- Equipped with a full extension lock for the internal profile









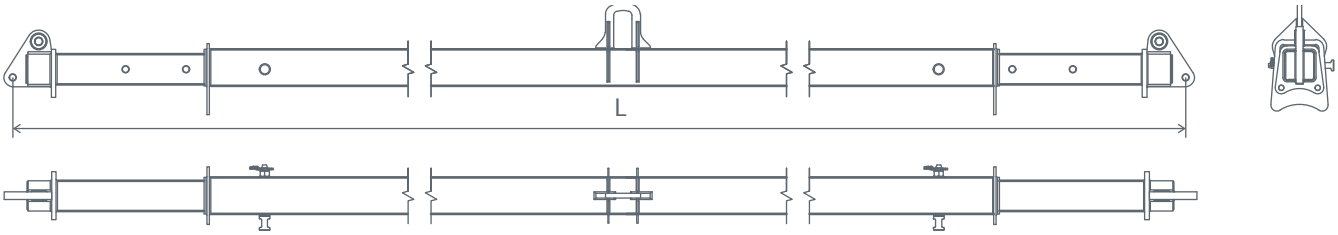


| Code | WLL | Working length L |
|---|---|---|
| | [kg] | [m] |
| TPR-W 6.0 - 03.9 | 6 000 | 3,9 - 2,13 |
| TPR-W 6.0 - 06.0 | 6 000 | 6,0 - 3,73 |
| TPR-W 10.0 - 03.9 | 10 000 | 3,9 - 2,06 |
| TPR-W 10.0 - 06.0 | 10 000 | 6,0 - 3,66 |

DECORLUX
HIJSTECHNIEK
TECHNIQUE LEVAGE
HEBETECHNIK
LIFTING TECHNICS

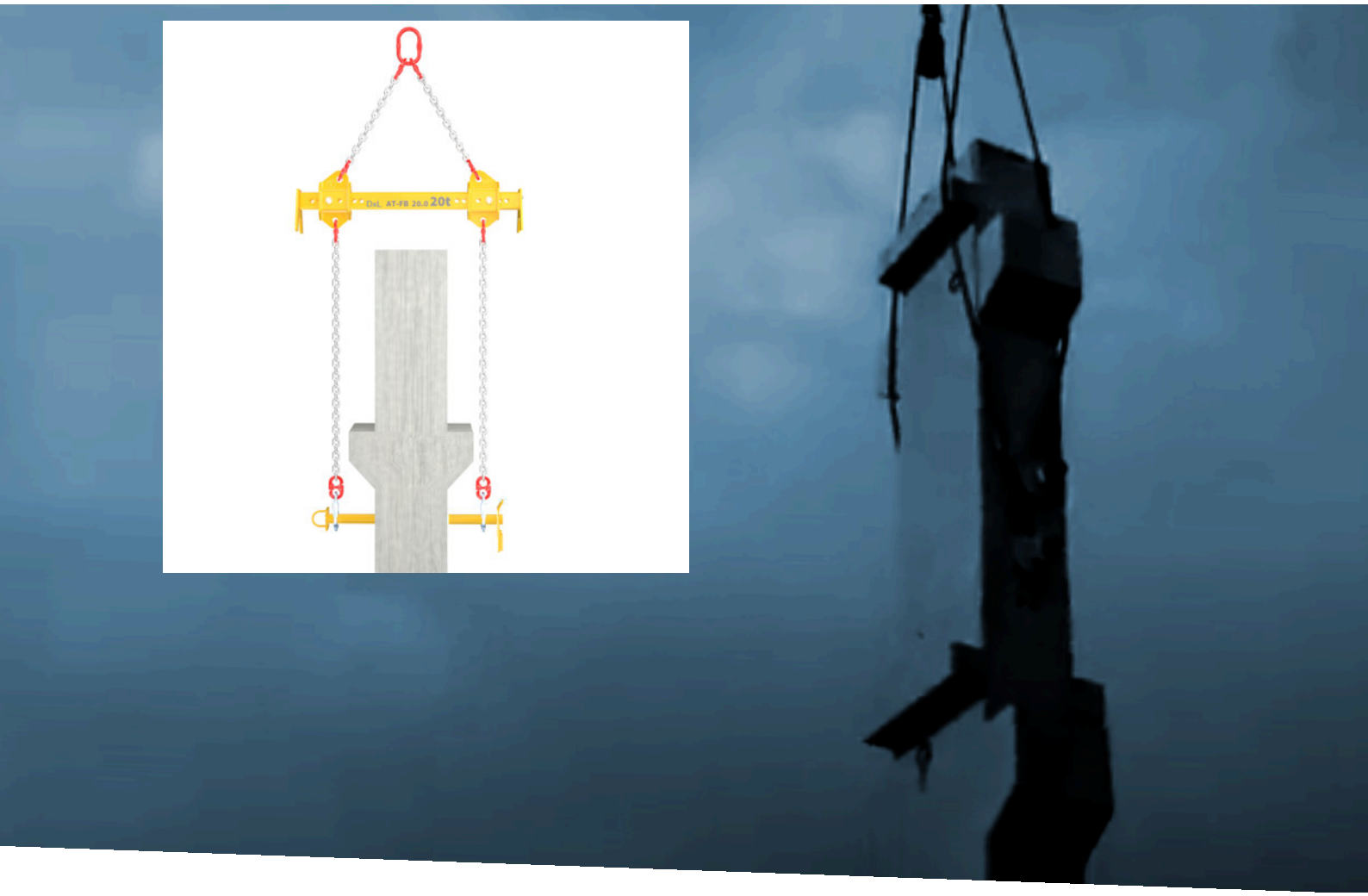


# Lifting Beam Assembly for Concrete Columns and vertical slabs

# DxL-AT-FS

## Lifting Beam Assembly Set for Concrete Columns

2006/42/EC Manufactured in acc. the Directive | CE Declaration of conformity | -20 +100°C working temperature | Made in EU

16 000 max. no. of work cycles | EN 13155 meets the Standard | endurance test 100% according to EN 13155 Annex

WLL lifting capacity **6-90 t**




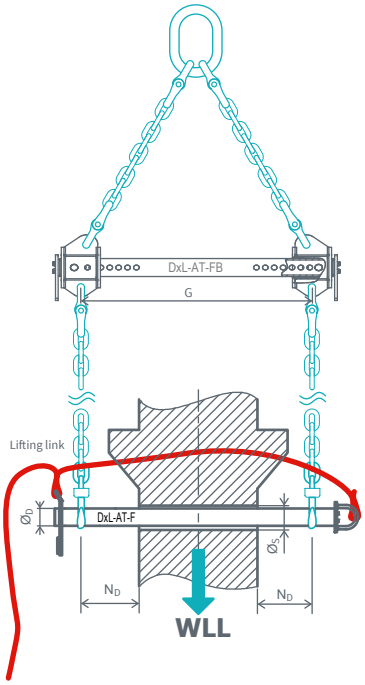


- The DxL-AT-FS set is designed for safe lifting and quick, pre-cise assembly of columns or slender precast concrete elements equipped with an appropriate load-bearing hole
- The DxL-AT-FS set consists of an DxL-AT-FB spreader beam, an DxL-AT-F pin and an appropriate set of chain slings and handling ropes
- The working spacing of the slings can be adjusted in 25mm increments by appropriately positioning the mo-vable profiles on the load-bearing beam, locked with pins, which allows for precise balancing of the center of gravity of the suspended load and avoiding collisions of the sling with protruding elements of the lifted load
- After being mounted and secured, the transported ele-ment can be remotely released from the sling using a maneuvering rope and simple maneuvers by the crane operator to remove the pin from the load-bearing hole
- Two DxL-AT-FS sets are required for lifting precast walls and slabs

The DxL-AT-FS set consists of an DxL-AT-FB spreader beam, an DxL-AT-F pin and an appropriate set of chain slings and handling rods.

Completing the set, i.e. selecting individual components, should be done taking into account the geometric para-meters of the lifted load.

That is why we do not offer ready-made sets, but we configure the product based on the inquiry submitted by the user, in which the following information should be provided:

- load weight
- diameter and length of the pin hole
- width of the collision elements
- height of the load above the pin

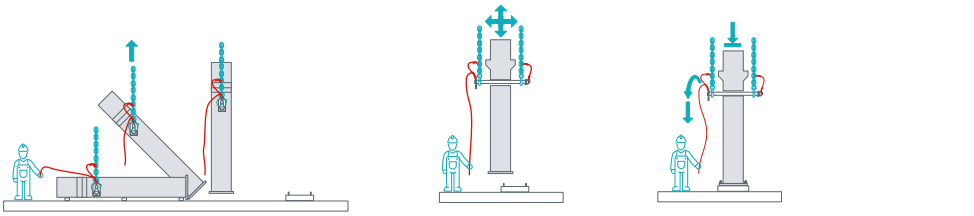

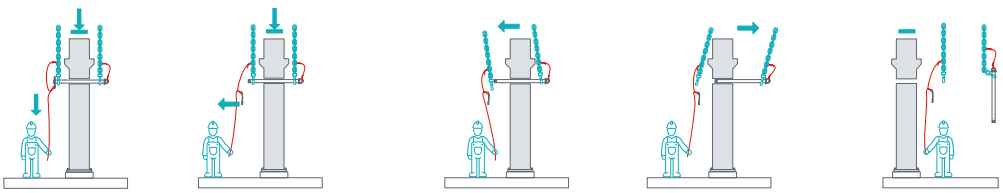

# DxL-AT-F Concrete column lifting rod

2006/42/EC Manufactured in acc. the Directive | CE Declaration of conformity | -20 +100°C working temperature | Made in EU

16 000 max. no. of work cycles | EN 13155 meets the Standard | endurance test 100% according to EN 13155 Annex

WLL lifting capacity **0,19-90 t**

- For safe lifting, handling and fast, precise assembly of precast columns, slender concrete slab elements or walls in a vertical position, equipped with appropriate load-bearing holes
- The possibility of rotating the load around the pin axis facilitates safe erection of the column from a horizontal storage position to a vertical assembly position
- For lifting precast walls and slabs, the use of two pins on two slings is required
- The DxL-AT-F pin can be part of the DxL-AT-FS concrete column lifting system with the associated DxL-AT-FB spreader beam and the appropriate set of chain slings and handling rods
- The pin can be remotely released from the load-bearing hole using a maneuvering rope, releasing the anti-slip plate and simple maneuvers by the crane operator

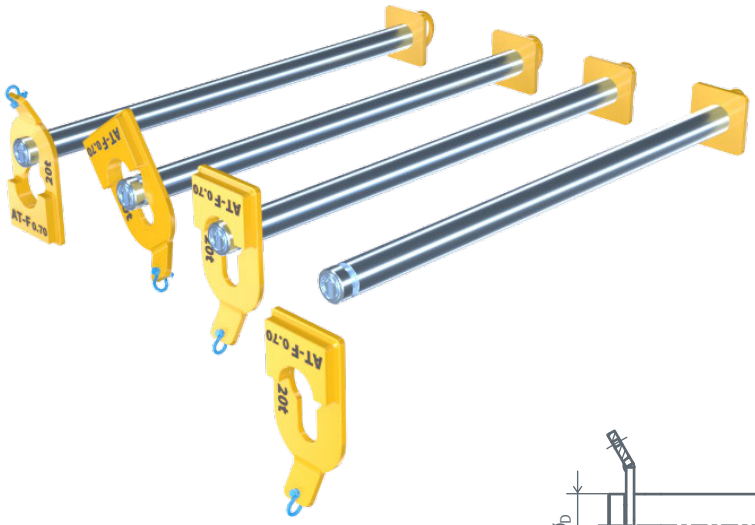


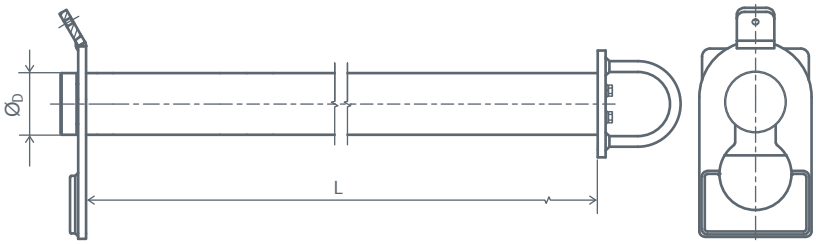


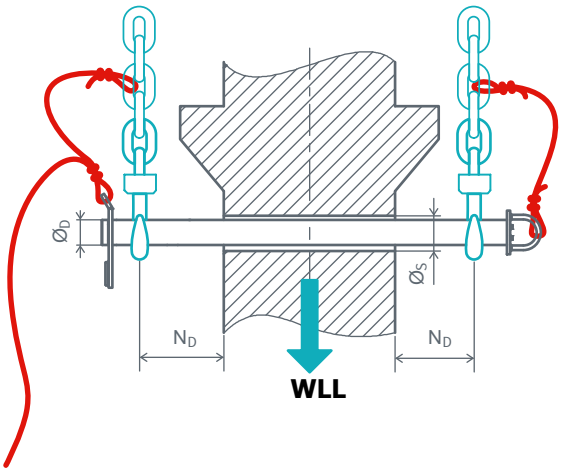


| Code DxL | ØD [mm] | ØS [mm] | L [mm] | WLL for ND=50mm | WLL for ND=80mm | WLL for ND=250mm | WLL for ND=300mm | WLL for ND=350mm | Mass [kg] |
|---|---|---|---|---|---|---|---|---|---|
| AT-F 020 | 20 | 30 | 500 | 0,9 t | 0,6 t | 0,24 t | 0,2 t | 0,17 t | 8 |
| AT-F 030 | 30 | 40 | 500 | 2,7 t | 1,9 t | 0,7 t | 0,6 t | 0,5 t | 9 |
| AT-F 035 | 35 | 45 | 800 | 4 t | 3 t | 1,2 t | 1 t | 0,9 t | 14 |
| AT-F 040 | 40 | 50 | 800 | 5,7 t | 4,3 t | 1,7 t | 1,5 t | 1,3 t | 16 |
| AT-F 045 | 45 | 55 | 800 | 6,9 t | 5,2 t | 2,2 t | 1,9 t | 1,6 t | 21 |
| AT-F 050 | 50 | 60 | 800 | 9 t | 6,9 t | 3 t | 2,5 t | 2,2 t | 23 |
| AT-F 060 | 60 | 70 | 800 | 14 t | 11 t | 5 t | 4 t | 3,5 t | 29 |
| AT-F 070 | 70 | 80 | 1 200 | 20,5 t | 16 t | 7,5 t | 6,5 t | 5,5 t | 47 |
| AT-F 080 | 80 | 90 | 1 400 | 28 t | 23 t | 11 t | 905 t | 8,5 t | 57 |
| AT-F 090 | 90 | 100 | 1 500 | 37,5 t | 30,5 t | 15 t | 13 t | 11,5 t | 88 |
| AT-F 115 | 115 | 125 | 1 800 | 58 t | 49 t | 26 t | 23 t | 20,5 t | 163 |
| AT-F 140 | 140 | 150 | 2 000 | 91 t | 78,5 t | 44 t | 39 t | 35 t | 260 |

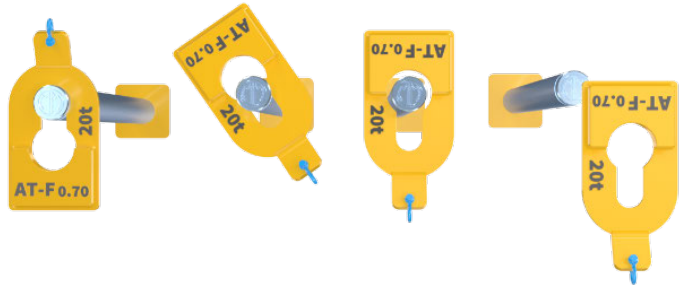


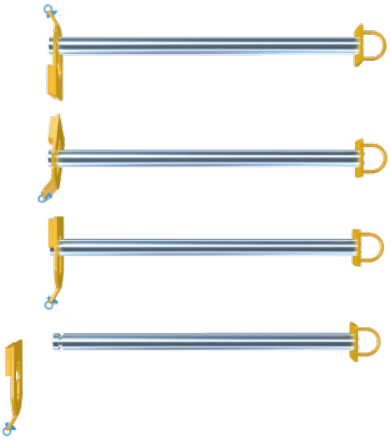

# DxL-AT-FB Spreader lifting beam

2006/42/EC Manufactured in acc. the Directive | CE Declaration of conformity | -20 +100°C working temperature | Made in EU

16 000 max. no. of work cycles | EN 13155 meets the Standard | endurance test 100% according to EN 13155 Annex

**WLL** lifting capacity **6-90 t** | suspension spacing **100-2000 mm**

- The AT-FB spreader beam was designed as part of the DxL-AT-FS concrete column lifting system, it can also work as a stand-alone spreader beam
- The crossbeam consists of a load-bearing beam with a base and two movable profile assemblies for attaching the slings
- The working spacing of the slings can be adjusted in 25mm increments by appropriately positioning the movable profiles on the load-bearing beam, locked with pins, which allows for precise balancing of the center of gravity of the suspended load
- The DxL-AT-FB spreader beam is sold without slings and fastening equipment

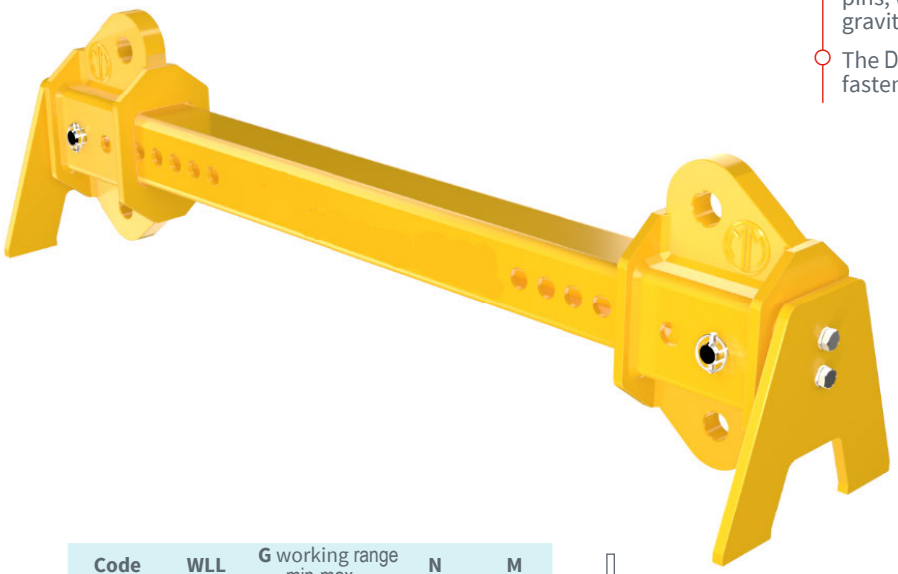

| Code | WLL [kg] | G working range min-max [mm] | N [mm] | M [mm] |
|---|---|---|---|---|
| AT-FB 06 | 6 000 | 100 - 800 | 50 | 75 |
| AT-FB 10 | 10 000 | 600 - 1 000 | 50 | 75 |
| AT-FB 20 | 20 000 | 600 - 1 300 | 50 | 75 |
| AT-FB 30 | 30 000 | 800 - 1 800 | 50 | 75 |
| AT-FB 50 | 50 000 | 1 100 - 1 800 | 50 | 75 |
| AT-FB 90 | 90 000 | 1 100 - 2 000 | 50 | 75 |



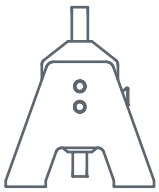

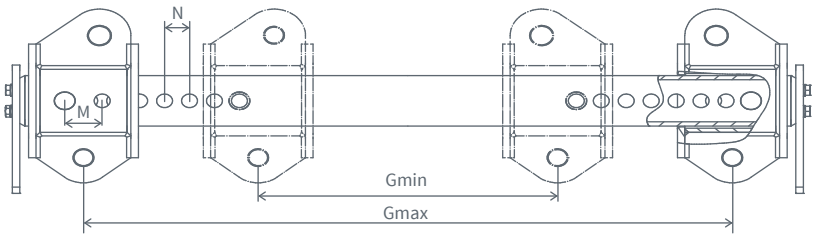



# HARDWARE VOOR STAALKABEL & KETTINGEN

# HARDWARE POUR CÂBLES ET CHAÎNES

# HARDWARE FOR WIRE ROPES & CHAINS

# HARDWARE FÜR DRAHTSEILE UND -KETTEN

HIJSTECHNIEK
LIFTING TECHNICS
TECHINIQUE LEVAGE
HEBETECHNIK

DECORLUX

| Identificatieplaatjes<br>EN818-4 - CE – Grade 80/100 | Plaques d'identification<br>EN818-4 - CE – Grade 80/100 | Identification Tags<br>EN818-4 -CE - Grade 80/100 | Anhänger<br>EN818-4 - CE - Grade 80/100 | | | |
|---|---|---|---|---|---|---|
| 1-Ketting diameter<br>2-Aantal lengen<br>3-Spreidinghoek<br>4-WLL | 1-Diamétre chaîne<br>2-Nombre de brin<br>3-Angle d 'inclination<br>4-CMU | 1-Chain thickness<br>2-Number of legs<br>3-Angle-inclination<br>4-WLL | 1-Kettennenndicke<br>2-Strangzahl<br>3-Neigungswinkel<br>4-WLL | Art.NR<br>Code Art.<br>Stock No.<br>Art.Nr. | € | 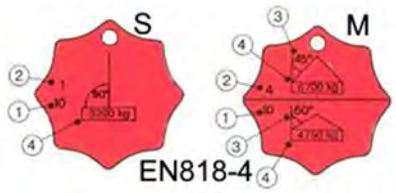 |
| ID-Alu Tag S-G80- | ID-Alu Tag S-G80 | ID-Alu Tag S-G80 | ID-Alu Tag S-G80 | 299910012 | |  |
| ID-Alu Tag M-G80 | ID-Alu Tag M-G80 | ID-Alu Tag M-G80 | ID-Alu Tag M-G80 | 299910013 | | |
| ID-Fe Tag S-G80 | ID-Fe Tag S-G80 | ID-Fe Tag S-G80 | ID-Fe Tag S-G80 | 220419 | |  |
| ID-Fe Tag M-G80 | ID-Fe Tag M-G80 | ID-Fe Tag M-G80 | ID-Fe Tag M-G80 | 220420 | | |
| ID-Alu Tag S-G100- | ID-Alu Tag S-G100 | ID-Alu Tag S-G80 | ID-Alu Tag S-G80 | 299910016 | |  M |
| ID-Alu Tag M-G100 | ID-Alu Tag M-G100 | ID-Alu Tag M-G100 | ID-Alu Tag M-G100 | 299910017 | |  S |
| Ø3/4x250mm<br>Kabel+klem | Ø3/4mx250mm<br>Cable+ferrule | Ø3/4x250mm<br>Cable+ferrule | Ø3/4x250mm<br>Seil + Pressklemme | 299911001 | |  Ø3/4 x 250mm |
| Ø3/5x300mm<br>Kabel+klem | Ø3/5x300mm<br>Cable+ferrule | Ø3/5x300mm<br>Cable+ferrule | Ø3/5x300mm<br>Seil+Pressklemme | 220421 | |  Ø3/5 x 300mm |
| Set<br>ID-Alu Tag S-G80 | Set<br>ID-Alu Tag S-G80 | Set<br>ID-Alu Tag S-G80 | Set<br>ID-Alu Tag S-G80 | 220422 | |  |
| Set<br>ID-Alu Tag M-G80 | Set<br>ID-Alu Tag M-G80 | Set<br>ID-Alu Tag M-G80 | Set<br>ID-Alu Tag M-G80 | 220423 | | |
| Set<br>ID-Fe Tag S-G80 | Set<br>ID-Fe Tag S-G80 | Set<br>ID-Fe Tag S-G80 | Set<br>ID-Fe Tag S-G80 | 220417 | | 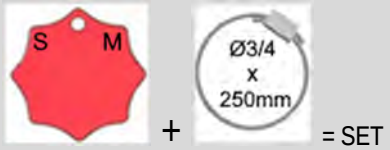 |
| Set<br>ID-Fe Tag M-G80 | Set<br>ID-Fe Tag M-G80 | Set<br>ID-Fe Tag M-G80 | Set<br>ID-Fe Tag M-G80 | 220418 | | |
| Set<br>ID-Alu Tag S-G80 | Set<br>ID-Alu Tag S-G80 | Set<br>ID-Alu Tag S-G80 | Set<br>ID-Alu Tag S-G80 | 220451 | | 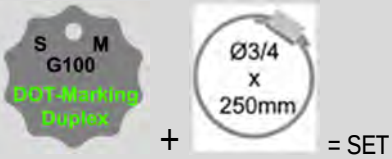 |
| Set<br>ID-Alu Tag M-G100 | Set<br>ID-Alu Tag M-G100 | Set<br>ID-Alu Tag M-G100 | Set<br>ID-Alu Tag M-G100 | 220452 | | |
| ID-Fe Tag S-G80<br>+ RING | ID-Fe Tag S-G80<br>+ RING | ID-Fe Tag S-G80<br>+ RING | ID-Fe Tag S-G80<br>+ RING | 299910014 | |  |
| ID-Fe Tag M<br>+ RING | ID-Fe Tag M<br>+ RING | ID-Fe Tag M<br>+ RING | ID-Fe Tag M<br>+ RING | 299910015 | | |
| Quick ring<br>Ø6x30mm<br>Verzinkt | Quick ring<br>Ø6x30mm<br>Galvanisé | Quick ring<br>Ø6x30mm<br>Galvanised | Quick ring<br>Ø6x30mm<br>Verzinkt | 220448 | |  |

| Identificatieplaatjes<br>UNI | Plaques d'identification<br>UNI | | | | Identification tags<br>UNI | | Anhänger<br>UNI |
|---|---|---|---|---|---|---|---|
| | code | A | B | C | Art.NR<br>Code Art.<br>Stock No.<br>Art.Nr. | € | |
| 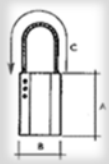 | P-NORM | 75 | 45 | 200 | 220424 | |  |
|  | P-MINI | 30 | 45 | 150 | 220425 | |  |
|  | Ø 70MM x 3mm-Galva | | | | 220426 | |  |
| | ID-Tag Alu: 55x40x3mm (Ø.5mm) | | | | 220428 | |  |
| | ID-Tag Alu: 55x40x3mm (Ø.5mm)<br>+ DOT marking | | | | 220427 | | |
| 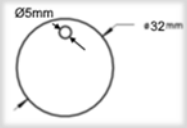 | ID-Tag Alu: D.32x1,5mm (Ø.5mm) | | | | 220435 | |  |
| | ID-Tag Alu: D.32x1,5mm (Ø.5mm)<br>+ DOT marking | | | | 220442 | | |
| 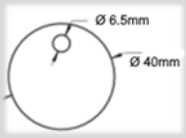 | ID-Tag Alu: D.40x1,5mm (Ø.6,5mm) | | | | 220436 | |  |
| | D-Tag Alu: D.40x1,5mm (Ø.6,5mm)<br>+ DOT marking | | | | 220443 | | |
| 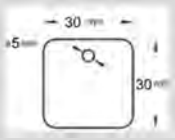 | ID- Tag Alu: 30x30x2mm (Ø.5mm) | | | | 220437 | |  |
| | ID-Tag Alu: 30x30x2mm (Ø.5mm)<br>+ DOT marking | | | | 220444 | | |
| 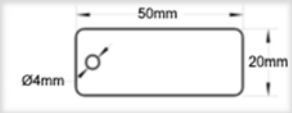 | ID-Tag Alu: 50x20x2mm (Ø.5mm) | | | | 220438 | |  |
| | ID-Tag Alu: 50x20x2mm (Ø.5mm)<br>+ DOT marking | | | | 220445 | | |
| 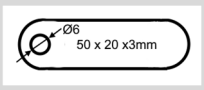 | ID-Tag Alu: D.50x20x3mm (Ø.6mm) | | | | 220449 | |  |
| | ID-Tag Alu: D.50x20x3mm (Ø.6mm)<br>+ DOT marking | | | | 220450 | | |
| | Ø2/3x200 Cable+Ferrrule | | | | 220440 | |  |
| | DOT-TEXT marking - S-G80IMPLEX | | | | 220432 | |  |
| | DOT-TEXT marking - DUPLEX | | | | 220433 | | |

| ID-Tag – Nylon Zip<br>met label | ID-Tag – Nylon Zip<br>avec label | ID-Tag – Nylon Zip<br>with label | ID-Tag – Nylon Zip<br>mit label |
|---|---|---|---|

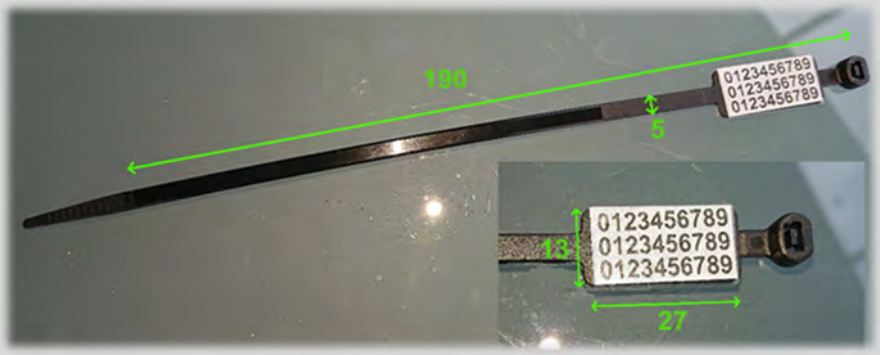


| BaS-G80e | AS-G80S-G80y | BMP 71 - Label | Info | Art.NR<br>Code Art.<br>Stock No.<br>Art.Nr. | € |
|---|---|---|---|---|---|
| ID-Tag NYLON ZIP | | | (Blank Label 13x27)x190x5mm | 220434 | |
| ID-Tag NYLON ZIP | + Self Laminated label- Yellow | M71-21-427 | (Printed-Label:25,9x19mm) x 63,5mm | 220429 | |
| ID-Tag NYLON ZIP | + Self Laminated label- White | M71-21-427 | (Printed-Label:25,9x19mm) x 63,5mm | 220430 | |
| ID-Tag NYLON ZIP | + Label - White | M71-17-483 | (Printed-Label:25,4x12.7mm) | 220431 | |

| ID-Tag<br>Self Laminated | ID-Tag<br>Self Laminated | ID-Tag<br>Self Laminated | ID-Tag<br>Self Laminated | | |
|---|---|---|---|---|---|
| | | BMP 71 | | Art.NR<br>Code Art.<br>Stock No.<br>Art.Nr. | € |
| ID-Tag | Self Laminated label- Yellow<br>(Printed-Label:25,9x19) x 63,5mm | M71-21-427 | 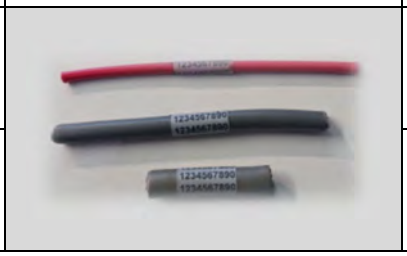 | 220446 | |
| ID-Tag | Self Laminated label- White<br>(Printed-Label:25,9x19) x 63,5mm | M71-21-427 | | 220447 | |

| Type MT2SA<br>Dubbelzijde montage tape<br>Outdoor - Extra Strong | Type MT2SA<br>Ruban double face<br>Outdoor - Extra Strong | Type MT2SA<br>Double Mounting Tape<br>Outdoor – Extra Strong | Type MT2SA<br>Doppelseitiges klebeband<br>Outdoor – Extra Strong |
|---|---|---|---|

| Kleefstof: Acrylaat – Drager: acrylschuim Temperatuurbestendigheid: -30°C-150°C - Kleefkracht: 47N/25mm - Dikte: 1,1mm<br>Adhésif: Acrylique Support: mouse acrylique - Tenue en température:-30°C-150°C - Pouvoir adhésif: 47N/25 mm - Epaisseur: 1,1mm<br>Adhesive: Acrylic - Carrier: Acrylic Foam - Max.Temp.: -30°C-150°C - Adhesive strength: 47N/25mm - Thicknes: 1,1mm<br>Klebeschicht: Acryl - Trägermaterial : Acrylschaumstoff - Temperaturbeständig: -30°C-150°C) Klebekraft: 47N/25 mm – Dicke: 1,1mm | | | Art.NR<br>Code Art.<br>Stock No.<br>Art.Nr. | € |
|---|---|---|---|---|
| Double sided Mounting Tape- outdoor – Extra Strong | 19mm x 50mm |  | 220439 | |
| Double sided Mounting Tape- outdoor – Extra Strong | 19mm x 5m |  | 220441 | |



# HARDWARE VOOR STAALKABEL & KETTINGEN | STAAL

# HARDWARE POUR CÂBLES ET CHAÎNES | ARCIER

# HARDWARE FOR WIRE ROPES & CHAINS | STEEL

# HARDWARE FÜR DRAHTSEILE UND -KETTEN | STHAL

HIJSTECHNIEK
LIFTING TECHNICS
TECHINIQUE LEVAGE
HEBETECHNIK

DECORLUX

# A055

**LIFTING EYE BOLT DIN 580** - Steel C 15 E

| Size | A | B | C | E | F | G | H | L | ⊥ W.L.L. | Λ 45° W.L.L. | ⊣ 90° W.L.L. | **Max Tightening torque** | **Weight** |
|---|---|---|---|---|---|---|---|---|---|---|---|---|---|
| | mm | mm | mm | mm | mm | mm | mm | mm | Kg | Kg | Kg | Nm | Kg |
| SIMILAR TO DIN **M 6** | 20 | 36 | 20 | 6 | 8 | 10 | 36 | 13 | 90 | 55 | 38 | 3,5 | 0,06 |
| **M 6** | 20 | 36 | 20 | 6 | 8 | 10 | 36 | 13 | 75 | 55 | 38 | 3,5 | 0,06 |
| **M 8** | 20 | 36 | 20 | 6 | 8 | 10 | 36 | 13 | 140 | 100 | 70 | 8 | 0,06 |
| **M 10** | 25 | 45 | 25 | 8 | 10 | 12 | 45 | 17 | 230 | 170 | 115 | 16 | 0,11 |
| **M 12** | 30 | 54 | 30 | 8 | 12 | 14 | 53 | 20,5 | 340 | 240 | 170 | 28 | 0,18 |
| SIMILAR TO DIN **M 14** | 30 | 54 | 30 | 10 | 12 | 14 | 53 | 20,5 | 500 | 240 | 170 | 45 | 0,19 |
| **M 14** | 35 | 63 | 35 | 12 | 14 | 16 | 62 | 27 | 490 | 350 | 245 | 45 | 0,27 |
| **M 16** | 35 | 63 | 35 | 12 | 14 | 16 | 62 | 27 | 700 | 500 | 350 | 70 | 0,28 |
| SIMILAR TO DIN **M 18** | 35 | 63 | 35 | 12 | 14 | 16 | 62 | 27 | 930 | 500 | 350 | 95 | 0,33 |
| **M 18** | 40 | 72 | 40 | 14 | 16 | 19 | 71 | 30 | 850 | 600 | 425 | 95 | 0,44 |
| **M 20** | 40 | 72 | 40 | 14 | 16 | 19 | 71 | 30 | 1200 | 860 | 600 | 135 | 0,45 |
| SIMILAR TO DIN **M 22** | 40 | 72 | 40 | 14 | 16 | 19 | 71 | 30 | 1500 | 860 | 600 | 182 | 0,5 |
| **M 22** | 50 | 90 | 50 | 18 | 20 | 24 | 90 | 36 | 1400 | 1000 | 700 | 182 | 0,72 |
| **M 24** | 50 | 90 | 50 | 18 | 20 | 24 | 90 | 36 | 1800 | 1290 | 900 | 230 | 0,74 |
| SIMILAR TO DIN **M 27** | 54 | 98 | 62 | 20 | 22 | 26 | 99 | 40 | 2500 | 1290 | 900 | 343 | 1,25 |
| **M 27** | 60 | 108 | 65 | 22 | 24 | 28 | 109 | 45 | 2100 | 1500 | 1050 | 343 | 1,62 |
| **M 30** | 60 | 108 | 65 | 22 | 24 | 28 | 109 | 45 | 3200 | 2300 | 1600 | 465 | 1,66 |
| SIMILAR TO DIN **M 33** | 60 | 108 | 65 | 22 | 24 | 28 | 109 | 45 | 4200 | 2300 | 1600 | 632 | 1,9 |
| **M 33** | 70 | 126 | 75 | 26 | 28 | 32 | 128 | 54 | 3200 | 2300 | 1600 | 632 | 2,6 |
| **M 36** | 70 | 126 | 75 | 26 | 28 | 32 | 128 | 54 | 4600 | 3300 | 2300 | 814 | 2,65 |
| SIMILAR TO DIN **M 39** | 80 | 144 | 85 | 30 | 32 | 38 | 147 | 63 | 6000 | 3300 | 2300 | 1059 | 3,78 |
| **M 39** | 80 | 144 | 85 | 30 | 32 | 38 | 147 | 63 | 4600 | 3300 | 2300 | 1059 | 3,78 |
| **M 42** | 80 | 144 | 85 | 30 | 32 | 38 | 147 | 63 | 6300 | 4500 | 3150 | 1304 | 4,03 |
| SIMILAR TO DIN **M 45** | 90 | 166 | 100 | 35 | 38 | 46 | 168 | 68 | 7800 | 4500 | 3150 | 1638 | 6,24 |
| **M 45** | 90 | 166 | 100 | 35 | 38 | 46 | 168 | 68 | 6300 | 4500 | 3150 | 1638 | 6,24 |
| **M 48** | 90 | 166 | 100 | 35 | 38 | 46 | 168 | 68 | 8600 | 6100 | 4300 | 1981 | 6,38 |
| SIMILAR TO DIN **M 52** | 100 | 184 | 110 | 38 | 42 | 50 | 187 | 78 | 9900 | 6100 | 4300 | 2540 | 8,57 |
| **M 52** | 100 | 184 | 110 | 38 | 42 | 50 | 187 | 78 | 8600 | 6100 | 4300 | 2540 | 8,57 |
| **M 56** | 100 | 184 | 110 | 38 | 42 | 50 | 187 | 78 | 11500 | 8200 | 5750 | 3000 | 8,8 |
| **M 60** | 110 | 206 | 120 | 42 | 48 | 58 | 208 | 90 | 11500 | 8200 | 5750 | 3000 | 12,13 |
| **M 64** | 110 | 206 | 120 | 42 | 48 | 58 | 208 | 90 | 16000 | 11000 | 8000 | 4736 | 12,4 |
| **M 72** | 140 | 260 | 150 | 50 | 60 | 72 | 260 | 100 | 20000 | 14000 | 10000 | 6913 | 23,3 |
| **M 80** | 160 | 296 | 170 | 55 | 68 | 80 | 298 | 112 | 28000 | 20000 | 14000 | 9625 | 34,2 |
| **M 100** | 180 | 330 | 190 | 60 | 75 | 88 | 330 | 130 | 40000 | 29000 | 20000 | 19613 | 49,1 |



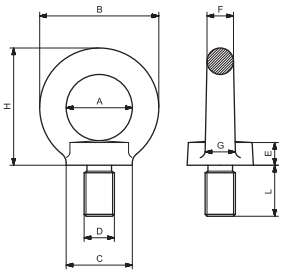

# A056

**EYE NUT DIN 582** - Steel C 15 E

| Size | | A | B | C | E | F | G | H | ⊥ W.L.L. | ∧ 45° W.L.L. | ⊣ 90° W.L.L. | **Max Tightening torque** | **Weight** |
|---|---|---|---|---|---|---|---|---|---|---|---|---|---|
| | | mm | mm | mm | mm | mm | mm | mm | Kg | Kg | Kg | Nm | Kg |
| SIMILAR TO DIN | **M 6** | 20 | 36 | 20 | 8,5 | 8 | 10 | 36 | 90 | 55 | 38 | 3,5 | 0,05 |
| | **M 6** | 20 | 36 | 20 | 8,5 | 8 | 10 | 36 | 75 | 55 | 38 | 3,5 | 0,05 |
| | **M 8** | 20 | 36 | 20 | 8,5 | 8 | 10 | 36 | 140 | 100 | 70 | 8 | 0,05 |
| | **M 10** | 25 | 45 | 25 | 10 | 10 | 12 | 45 | 230 | 170 | 115 | 16 | 0,09 |
| | **M 12** | 30 | 54 | 30 | 11 | 12 | 14 | 53 | 340 | 240 | 170 | 28 | 0,16 |
| SIMILAR TO DIN | **M 14** | 30 | 54 | 30 | 11 | 12 | 14 | 53 | 500 | 240 | 170 | 45 | 0,15 |
| | **M 14** | 35 | 63 | 35 | 13 | 14 | 16 | 62 | 490 | 350 | 245 | 45 | 0,24 |
| | **M 16** | 35 | 63 | 35 | 13 | 14 | 16 | 62 | 700 | 500 | 350 | 70 | 0,24 |
| SIMILAR TO DIN | **M 18** | 35 | 63 | 35 | 13 | 14 | 16 | 62 | 930 | 500 | 350 | 95 | 0,33 |
| | **M 18** | 40 | 72 | 40 | 16 | 16 | 19 | 71 | 850 | 600 | 425 | 95 | 0,37 |
| | **M 20** | 40 | 72 | 40 | 16 | 16 | 19 | 71 | 1200 | 860 | 600 | 135 | 0,36 |
| SIMILAR TO DIN | **M 22** | 40 | 72 | 40 | 16 | 16 | 19 | 71 | 1500 | 860 | 600 | 182 | 0,35 |
| | **M 22** | 50 | 90 | 50 | 20 | 20 | 24 | 90 | 1400 | 1000 | 700 | 182 | 0,73 |
| | **M 24** | 50 | 90 | 50 | 20 | 20 | 24 | 90 | 1800 | 1290 | 900 | 230 | 0,72 |
| SIMILAR TO DIN | **M 27** | 54 | 98 | 62 | 22 | 22 | 26 | 99 | 2500 | 1290 | 900 | 343 | 0,8 |
| | **M 27** | 60 | 108 | 65 | 25 | 24 | 28 | 109 | 2100 | 1500 | 1050 | 343 | 1,34 |
| | **M 30** | 60 | 108 | 65 | 25 | 24 | 28 | 109 | 3200 | 2300 | 1600 | 465 | 1,32 |
| SIMILAR TO DIN | **M 33** | 60 | 108 | 65 | 25 | 24 | 28 | 109 | 4200 | 2300 | 1600 | 632 | 1,27 |
| | **M 33** | 70 | 126 | 75 | 30 | 28 | 32 | 128 | 3200 | 2300 | 1600 | 632 | 2,11 |
| | **M 36** | 70 | 126 | 75 | 30 | 28 | 32 | 128 | 4600 | 3300 | 2300 | 814 | 2,08 |
| SIMILAR TO DIN | **M 39** | 80 | 144 | 85 | 35 | 32 | 38 | 147 | 6000 | 3300 | 2300 | 1059 | 3,15 |
| | **M 39** | 80 | 144 | 85 | 35 | 32 | 38 | 147 | 4600 | 3300 | 2300 | 1059 | 3,15 |
| | **M 42** | 80 | 144 | 85 | 35 | 32 | 38 | 147 | 6300 | 4500 | 3150 | 1304 | 3,11 |
| SIMILAR TO DIN | **M 45** | 90 | 166 | 100 | 40 | 38 | 46 | 168 | 7800 | 4500 | 3150 | 1638 | 5,08 |
| | **M 45** | 90 | 166 | 100 | 40 | 38 | 46 | 168 | 6300 | 4500 | 3150 | 1638 | 5,08 |
| | **M 48** | 90 | 166 | 100 | 40 | 38 | 46 | 168 | 8600 | 6100 | 4300 | 1981 | 5,02 |
| SIMILAR TO DIN | **M 52** | 100 | 184 | 110 | 45 | 42 | 50 | 187 | 9900 | 6100 | 4300 | 2540 | 6,79 |
| | **M 52** | 100 | 184 | 110 | 45 | 42 | 50 | 187 | 8600 | 6100 | 4300 | 2540 | 6,79 |
| | **M 56** | 100 | 184 | 110 | 45 | 42 | 50 | 187 | 11500 | 8200 | 5750 | 3000 | 6,69 |
| | **M 60** | 110 | 206 | 120 | 50 | 48 | 58 | 208 | 11500 | 8200 | 5750 | 3000 | 9,43 |
| | **M 64** | 110 | 206 | 120 | 50 | 48 | 58 | 208 | 16000 | 11000 | 8000 | 4736 | 9,3 |
| | **M 72** | 140 | 260 | 150 | 60 | 60 | 72 | 260 | 20000 | 14000 | 10000 | 6913 | 18,5 |
| | **M 80** | 160 | 296 | 170 | 70 | 68 | 80 | 298 | 28000 | 20000 | 14000 | 9625 | 27,3 |
| | **M 100** | 180 | 330 | 190 | 80 | 75 | 88 | 330 | 40000 | 29000 | 20000 | 19613 | 36,4 |



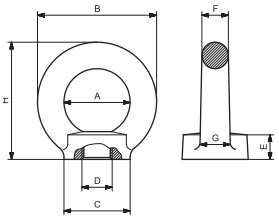


# A057

**EYE NUT WITH OVAL EYE UNI 2948** - Steel Fe 430B

| Size | **A** | **B** | **C** | **E** | **F** | **G** | **L** | ⊥ W.L.L. | ∧ 45° W.L.L. | **Weight** |
|---|---|---|---|---|---|---|---|---|---|---|
| | mm | mm | mm | mm | mm | mm | mm | Kg | Kg | Kg |
| **M 8** | 18 | 36 | 20 | 8,5 | 8 | 19 | 36 | 80 | 40 | 0,07 |
| **M 10** | 24 | 44 | 30 | 14 | 10 | 28 | 58 | 160 | 80 | 0,14 |
| **M 12** | 30 | 56 | 34 | 16 | 13 | 32 | 72 | 250 | 125 | 0,26 |
| **M 14** | 30 | 56 | 34 | 16 | 13 | 32 | 72 | 320 | 160 | 0,26 |
| **M 16** | 36 | 68 | 40 | 20 | 16 | 38 | 86 | 400 | 200 | 0,43 |
| **M 18** | 36 | 68 | 40 | 20 | 16 | 38 | 86 | 510 | 255 | 0,41 |
| **M 20** | 42 | 80 | 48 | 24 | 19 | 45 | 100 | 630 | 315 | 0,59 |
| **M 22** | 42 | 80 | 48 | 24 | 19 | 45 | 100 | 800 | 400 | 0,7 |
| **M 24** | 50 | 94 | 56 | 28 | 22 | 53 | 119 | 1000 | 500 | 1,09 |
| **M 27** | 50 | 103 | 62 | 32 | 24 | 58 | 129 | 1250 | 625 | 1,04 |
| **M 30** | 60 | 112 | 68 | 36 | 26 | 64 | 141 | 1600 | 800 | 1,83 |
| **M 36 x 3** | 70 | 128 | 80 | 42 | 29 | 75 | 164 | 2500 | 1250 | 2,79 |
| **M 42 x 3** | 82 | 148 | 92 | 50 | 33 | 87 | 192 | 3750 | 1875 | 4,32 |
| **M 48 x 3** | 90 | 162 | 105 | 58 | 36 | 99 | 211 | 5000 | 2500 | 6,02 |



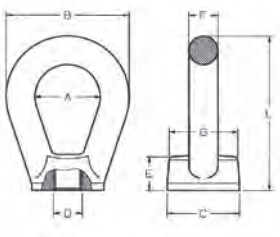

## A059

**FRENCH TYPE EYEBOLT** - Steel C 15

| D Size | A | B | C | E | F | G | L | D | Max Tightening torque | SWL | Weight |
|---|---|---|---|---|---|---|---|---|---|---|---|
| | mm | mm | mm | mm | mm | mm | mm | mm | Nm | Kg | Kg |
| **M 6** | 20 | 36 | 20,5 | 6 | 8 | 44 | 24 | 6 | 3,5 | 90 | 0,05 |
| **M 8** | 20 | 36 | 20,5 | 6 | 8 | 44 | 24 | 8 | 8 | 140 | 0,06 |
| **M 10** | 23 | 44 | 22,5 | 7 | 10,5 | 51 | 28,5 | 10 | 16 | 230 | 0,12 |
| **M 12** | 29 | 50 | 22,5 | 8 | 10,5 | 60,5 | 40 | 12 | 28 | 340 | 0,14 |
| **M 14** | 33 | 57 | 26 | 9 | 12 | 69,5 | 40 | 14 | 45 | 500 | 0,2 |
| **M 16** | 37 | 65 | 28 | 9 | 14 | 76 | 50 | 16 | 70 | 700 | 0,32 |
| **M 18** | 41 | 71 | 31 | 9 | 15 | 85 | 52 | 18 | 95 | 930 | 0,42 |
| **M 20** | 46 | 78 | 32 | 9 | 16 | 92 | 55 | 20 | 135 | 1200 | 0,52 |
| **M 22** | 50 | 84 | 35 | 9 | 17 | 98 | 62 | 22 | 182 | 1500 | 0,64 |
| **M 24** | 53 | 94 | 38 | 12 | 20,5 | 110 | 67 | 24 | 230 | 1800 | 0,92 |
| **M 27** | 59 | 101 | 40 | 15 | 21 | 120 | 74 | 27 | 343 | 2500 | 1,16 |
| **M 30** | 60 | 109 | 45,5 | 18 | 24,5 | 132 | 79 | 30 | 465 | 3600 | 1,66 |
| **M 33** | 64 | 121 | 55 | 22 | 28,5 | 144 | 84 | 33 | 632 | 5100 | 2,48 |



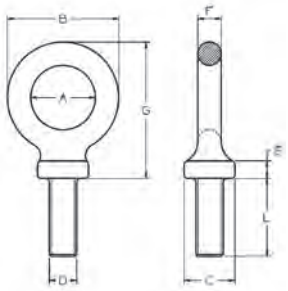


## A224

**ALLOY STEEL FRENCH TYPE EYEBOLT** - 42CrMo

| Size | A | B | C | D | E | F | G | L | Weight | Max Tightening torque | W.L.L. |
|---|---|---|---|---|---|---|---|---|---|---|---|
| | mm | mm | mm | mm | mm | mm | mm | mm | Kg | Nm | Kg |
| **M 8** | 19,5 | 35,5 | 20 | 8 | 6 | 8 | 44 | 24 | 0,06 | 8 | 400 |
| **M 10** | 23 | 43 | 21 | 10 | 7 | 10 | 51 | 28 | 0,08 | 16 | 700 |
| **M 12** | 29 | 53 | 22 | 12 | 8 | 12 | 64 | 40 | 0,14 | 28 | 1000 |
| **M 14** | 31,5 | 59,5 | 26 | 14 | 9 | 14 | 72 | 40 | 0,2 | 45 | 1200 |
| **M 16** | 36 | 64 | 28 | 16 | 10 | 14 | 79 | 51 | 0,3 | 70 | 1500 |
| **M 18** | 41,5 | 73,5 | 31 | 18 | 11 | 16 | 88 | 53 | 0,42 | 95 | 2000 |
| **M 20** | 45,5 | 77,5 | 32 | 20 | 12 | 18 | 95 | 56 | 0,5 | 135 | 2500 |
| **M 22 NEW** | 50 | 84 | 35 | 22 | 9 | 17 | 98 | 62 | 0,64 | 182 | 3000 |
| **M 24 NEW** | 53 | 94 | 38 | 24 | 12 | 20,5 | 110 | 67 | 0,92 | 230 | 4000 |
| **M 27 NEW** | 59 | 101 | 40 | 27 | 15 | 21 | 120 | 74 | 1,16 | 343 | 5000 |
| **M 30 NEW** | 60 | 109 | 45,5 | 30 | 18 | 24,5 | 132 | 79 | 1,66 | 465 | 6000 |



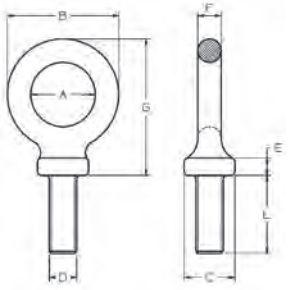

## S46-A46

**GALVANIZED FORGED DEE SHACKLE** - Steel Fe 430 B

| Size mm | A mm | B mm | C mm | D mm | E mm | F mm | S.W.L. Kg | Weight Kg |
|---|---|---|---|---|---|---|---|---|
| **5** | 8 | 18 | 12 | 5 | 5 | 23 | 70 | 0,02 |
| **6** | 11 | 23 | 14 | 6 | 6 | 29 | 100 | 0,04 |
| **8** | 16 | 32 | 18 | 8 | 8 | 37 | 250 | 0,08 |
| **10** | 19 | 38 | 21 | 10 | 10 | 41 | 400 | 0,11 |
| **11** | 23 | 45 | 26 | 11 | 11 | 48 | 470 | 0,2 |
| **12** | 26 | 50 | 28 | 12 | 12 | 54 | 630 | 0,25 |
| **14** | 28 | 56 | 30 | 14 | 14 | 57 | 750 | 0,34 |
| **16** | 30 | 64 | 35 | 16 | 16 | 63 | 1000 | 0,51 |
| **18** | 28 | 64 | 37 | 18 | 18 | 62 | 1300 | 0,75 |
| **20** | 35 | 68 | 39 | 20 | 18,5 | 65 | 1600 | 0,94 |
| **22** | 41 | 83 | 44 | 22 | 21 | 75 | 2000 | 1,3 |
| **25** | 36 | 80 | 50 | 25 | 22 | 81 | 2500 | 1,6 |
| **28** | 40 | 88 | 56 | 28 | 24 | 90 | 3150 | 2 |
| **32** | 45 | 99 | 64 | 32 | 27 | 99 | 4000 | 2,9 |
| **36** | 50 | 110 | 74 | 36 | 30 | 109 | 5000 | 4,3 |
| **40** | 55 | 123 | 80 | 40 | 34 | 120 | 6300 | 6 |
| **42** | 60 | 136 | 85 | 42 | 38 | 131 | 8000 | 7,4 |
| **45** | 65 | 149 | 90 | 45 | 42 | 135 | 10000 | 10 |
| **50** | 70 | 165 | 103 | 48 | 47 | 155 | 12500 | 13,7 |
| **56** | 80 | 184 | 114 | 56 | 52 | 170 | 16000 | 16,6 |



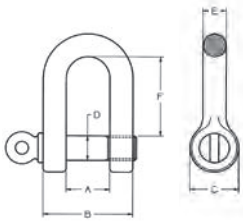


## S47-A47

**GALVANIZED FORGED BOW SHACKLE** - Steel Fe 430 B

| Size mm | A mm | B mm | C mm | D mm | E mm | F mm | G mm | S.W.L. Kg | Weight Kg |
|---|---|---|---|---|---|---|---|---|---|
| **5** | 9 | 20 | 10 | 5 | 5 | 20 | 18 | 80 | 0,02 |
| **6** | 12 | 24 | 12 | 6 | 6 | 26 | 19 | 100 | 0,03 |
| **8** | 15 | 33 | 17 | 8 | 8 | 31 | 24 | 200 | 0,08 |
| **10** | 16 | 37 | 20 | 10 | 10 | 38 | 30 | 300 | 0,1 |
| **11** | 21 | 46 | 22 | 11 | 11 | 44 | 35 | 400 | 0,18 |
| **12** | 23 | 49 | 24 | 12 | 12 | 53 | 39 | 500 | 0,28 |
| **14** | 30 | 61 | 30 | 14 | 15 | 59 | 47 | 600 | 0,39 |
| **16** | 30 | 64 | 31 | 16 | 18 | 64 | 48 | 800 | 0,48 |
| **18** | 35 | 75 | 41 | 18 | 19,5 | 72 | 59 | 1100 | 0,9 |
| **20** | 35 | 75 | 41 | 20 | 19,5 | 72 | 59 | 1100 | 0,96 |
| **22** | 46 | 89 | 49 | 22 | 22 | 85 | 61 | 1500 | 1,37 |
| **24** | 50 | 100 | 57 | 25 | 26 | 102 | 76 | 2000 | 2,28 |
| **28** | 53 | 110 | 61 | 28 | 28 | 111 | 81 | 2600 | 2,86 |
| **32** | 56 | 119 | 62 | 32 | 31 | 117 | 82 | 3200 | 4,1 |
| **39** | 75 | 150 | 80 | 38 | 41 | 155 | 115 | 4500 | 7,3 |



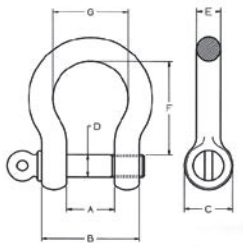


## A048

**DEE SHACKLE** - Steel Fe 430 B

| Size mm | A mm | B mm | C mm | D mm | E mm | F mm | S.W.L. Kg | Weight Kg |
|---|---|---|---|---|---|---|---|---|
| **5** | 10 | 20 | 21 | 5 | 5 | 11 | 70 | 0,014 |
| **6** | 13 | 25 | 28 | 6 | 6 | 14 | 100 | 0,03 |
| **8** | 16 | 32 | 36 | 8 | 8 | 18 | 250 | 0,047 |
| **10** | 19 | 39 | 43 | 10 | 10 | 20 | 400 | 0,089 |
| **11** | 22 | 44 | 50 | 11 | 11 | 24 | 470 | 0,12 |
| **12** | 25 | 49 | 57 | 12 | 12 | 28 | 630 | 0,17 |
| **14** | 28 | 56 | 64 | 14 | 14 | 30 | 750 | 0,31 |
| **16** | 32 | 64 | 72 | 16 | 16 | 33 | 1000 | 0,38 |
| **18** | 37 | 70 | 74 | 18 | 18 | 33,5 | 1300 | 0,73 |
| **20** | 38 | 78 | 86 | 20 | 20 | 40 | 1600 | 0,73 |
| **22** | 44 | 88 | 91 | 22 | 22 | 50 | 2000 | 1,32 |
| **24** | 48,5 | 97 | 99 | 24 | 24 | 47,5 | 2500 | 2,07 |
| **28** | 57 | 113 | 129 | 28 | 28 | 68 | 3150 | 2,88 |
| **32** | 64 | 128 | 143 | 32 | 32 | 73 | 4000 | 3,6 |
| **36** | 72 | 144 | 155 | 36 | 36 | 80 | 5000 | 5,8 |
| **38** | 76 | 152 | 171 | 38 | 38 | 85 | 6000 | 6,1 |
| **42** | 84 | 168 | 185 | 42 | 42 | 90 | 8000 | 7,8 |
| **45** | 90 | 180 | 202 | 45 | 45 | 98 | 10000 | 11 |
| **50** | 102 | 202 | 225 | 50 | 50 | 108 | 12500 | 14 |



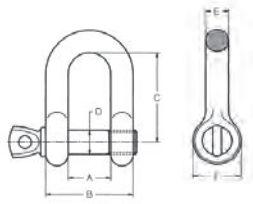

## A049

**BOW SHACKLE** - Steel Fe 430 B

| Size mm | A mm | B mm | C mm | D mm | E mm | F mm | G mm | S.W.L. Kg | Weight Kg |
|---|---|---|---|---|---|---|---|---|---|
| **5** | 10 | 20 | 16 | 5 | 21 | 5 | 11 | 80 | 0,02 |
| **6** | 13 | 25 | 20 | 6 | 28 | 6 | 14 | 100 | 0,03 |
| **8** | 16 | 32 | 24 | 8 | 36 | 8 | 18 | 200 | 0,08 |
| **10** | 19 | 39 | 32 | 10 | 43 | 10 | 20 | 300 | 0,13 |
| **11** | 22 | 44 | 35 | 11 | 50 | 11 | 24 | 400 | 0,15 |
| **12** | 25 | 49 | 38 | 12 | 57 | 12 | 28 | 500 | 0,23 |
| **14** | 28 | 56 | 44 | 14 | 64 | 14 | 30 | 600 | 0,36 |
| **16** | 32 | 64 | 50 | 16 | 72 | 16 | 32 | 800 | 0,37 |
| **18** | 38 | 74 | 56 | 18 | 86 | 18 | 35 | 1100 | 0,73 |
| **20** | 38 | 78 | 66 | 20 | 86 | 20 | 40 | 1100 | 1 |
| **22** | 44 | 88 | 74 | 22 | 91 | 22 | 50 | 1500 | 1,43 |
| **24** | 48,5 | 95 | 68 | 24 | 108 | 24 | 47 | 2000 | 2,04 |
| **28** | 57 | 113 | 94 | 28 | 129 | 28 | 68 | 2600 | 2,88 |
| **32** | 64 | 128 | 104 | 32 | 143 | 32 | 73 | 3200 | 4,1 |
| **36** | 72 | 144 | 115 | 36 | 155 | 36 | 80 | 4200 | 5,3 |
| **38** | 76 | 152 | 136 | 38 | 171 | 38 | 85 | 4500 | 7,4 |
| **42** | 84 | 168 | 142 | 42 | 185 | 42 | 90 | 6000 | 8 |
| **45** | 90 | 180 | 150 | 45 | 202 | 45 | 98 | 7000 | 12 |
| **50** | 102 | 202 | 156 | 50 | 225 | 50 | 108 | 8000 | 15 |



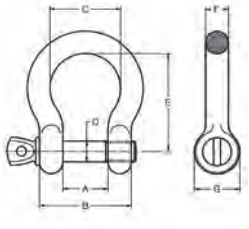

## A148

**DEE SHACKLE SQUARE HEAD** - Steel

| Size mm | A mm | B mm | C mm | D mm | E mm | F mm | S.W.L. Kg | Weight Kg |
|---|---|---|---|---|---|---|---|---|
| **5** | 10 | 20 | 19 | 5 | 5 | 11 | 70 | 0,016 |
| **6** | 13 | 25 | 25 | 6 | 6 | 14 | 100 | 0,03 |
| **8** | 16 | 32 | 32 | 8 | 8 | 18 | 250 | 0,06 |
| **10** | 19 | 39 | 38 | 10 | 10 | 20 | 400 | 0,12 |
| **11** | 22 | 44 | 44 | 11 | 11 | 24 | 470 | 0,16 |
| **12** | 25 | 49 | 51 | 12 | 12 | 28 | 630 | 0,22 |
| **14** | 28 | 56 | 55 | 14 | 14 | 30 | 750 | 0,32 |
| **16** | 32 | 64 | 64 | 16 | 16 | 33 | 1000 | 0,5 |
| **20** | 38 | 78 | 76 | 20 | 20 | 40 | 1600 | 1 |
| **22** | 44 | 88 | 89 | 22 | 22 | 50 | 2000 | 1,4 |
| **25** | 51 | 97 | 100 | 25 | 25 | 47,5 | 2500 | 2,08 |
| **28** | 57 | 113 | 115 | 28 | 28 | 68 | 3150 | 3,05 |
| **32** | 64 | 128 | 127 | 32 | 32 | 73 | 4000 | 4,3 |
| **36** | 72 | 144 | 125 | 36 | 36 | 80 | 5000 | 7,2 |
| **45** | 90 | 180 | 180 | 45 | 45 | 98 | 10000 | 12 |
| **50** | 102 | 202 | 200 | 50 | 50 | 108 | 12500 | 17,5 |



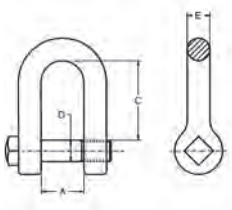

## A152

**BOW SHACKLE SQUARE HEAD** - Steel

| Size mm | A mm | B mm | C mm | E mm | F mm | D mm | G mm | S.W.L. Kg | Weight Kg |
|---|---|---|---|---|---|---|---|---|---|
| **5** | 10 | 20 | 16 | 19 | 5 | 5 | 11 | 80 | 0,017 |
| **6** | 13 | 25 | 20 | 25 | 6 | 6 | 14 | 100 | 0,03 |
| **8** | 16 | 32 | 24 | 32 | 8 | 8 | 18 | 200 | 0,07 |
| **10** | 19 | 39 | 32 | 41 | 10 | 10 | 20 | 300 | 0,12 |
| **11** | 22 | 44 | 35 | 44 | 11 | 11 | 24 | 400 | 0,16 |
| **12** | 25 | 49 | 38 | 51 | 12 | 12 | 28 | 500 | 0,23 |
| **14** | 28 | 56 | 44 | 59 | 14 | 14 | 30 | 600 | 0,36 |
| **16** | 32 | 64 | 50 | 68 | 16 | 16 | 32 | 800 | 0,56 |
| **20** | 38 | 78 | 66 | 80 | 20 | 20 | 40 | 1100 | 1,1 |
| **22** | 44 | 88 | 74 | 92 | 22 | 22 | 50 | 1500 | 1,52 |
| **25** | 51 | 95 | 75 | 104 | 25 | 25 | 47 | 2000 | 2,2 |
| **28** | 57 | 113 | 94 | 115 | 28 | 28 | 68 | 2600 | 3,27 |
| **32** | 64 | 128 | 104 | 127 | 32 | 32 | 73 | 3200 | 4,5 |
| **36** | 72 | 144 | 115 | 144 | 36 | 36 | 80 | 4200 | 7,5 |
| **45** | 90 | 180 | 150 | 180 | 45 | 45 | 98 | 7000 | 12,8 |
| **50** | 102 | 202 | 156 | 200 | 50 | 50 | 108 | 8000 | 18 |



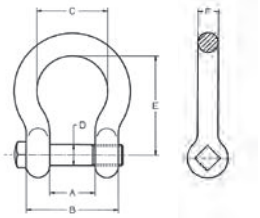

## A052 VN

**BLACK ALLOY STEEL BOW SHACKLE WITH SCREW PIN** - High tensile steel

| Working load t | Size | A mm | B mm | C mm | D mm | E mm | F mm | G mm | Weight Kg |
|---|---|---|---|---|---|---|---|---|---|
| **1,5** | 7/16" | 19,1 | 11,2 | 42,9 | 12,7 | 29,5 | 27 | 11 | 0,17 |
| **2** | 1/2" | 20,6 | 12,7 | 47,8 | 16 | 33,3 | 30 | 13 | 0,33 |
| **3,25** | 5/8" | 26,9 | 16 | 60,5 | 19,1 | 42,9 | 39 | 16 | 0,62 |
| **4,75** | 3/4" | 31,8 | 19,1 | 71,4 | 22,4 | 50,8 | 47 | 19 | 1,07 |



## A156

**WIRE ROPE CLIP DROP FORGED** - Body: Steel Fe 430 B  U-bolt: Steel Fe 360 B

| Size mm | Rope mm | A mm | B mm | C mm | D mm | E mm | I mm | L mm | L1 mm | Weight Kg |
|---|---|---|---|---|---|---|---|---|---|---|
| **4** | 3-4 | 21 | 14 | 9 | M 4 | 4,5 | 9 | 20 | 12 | 0,01 |
| **5** | 5 | 25 | 17 | 10 | M 5 | 4,5 | 11 | 24 | 13 | 0,02 |
| **6** | 6 | 30 | 19 | 11 | M 6 | 5 | 14,5 | 34 | 19 | 0,03 |
| **8** | 8 | 33 | 20 | 12 | M 6 | 5,5 | 16 | 34 | 19 | 0,04 |
| **10** | 10 | 38 | 22 | 14 | M 8 | 6 | 18 | 44 | 24 | 0,07 |
| **11** | 11 | 40 | 23 | 15 | M 8 | 6,5 | 20 | 45 | 27 | 0,08 |
| **12** | 12 | 45 | 25 | 16 | M 10 | 7 | 23 | 55 | 30 | 0,12 |
| **14** | 14 | 46 | 27 | 17 | M 10 | 7,5 | 24 | 55 | 30 | 0,14 |
| **16** | 16 | 53 | 31 | 18 | M 10 | 8 | 28 | 63 | 32 | 0,18 |
| **18** | 18 | 59 | 33 | 20 | M 12 | 8 | 30 | 78 | 38 | 0,26 |
| **20** | 20 | 60 | 34 | 22 | M 12 | 9 | 33 | 78 | 38 | 0,29 |
| **22** | 22 | 64 | 34 | 23 | M 12 | 9,5 | 36 | 81 | 45 | 0,3 |
| **24** | 24-25 | 70 | 40 | 24 | M 12 | 10 | 38 | 86 | 45 | 0,38 |
| **28** | 28 | 80 | 43 | 30 | M 14 | 12 | 42 | 110 | 55 | 0,56 |
| **30** | 30 | 80 | 44,5 | 32 | M 14 | 12 | 48 | 112 | 55 | 0,71 |
| **32** | 32 | 92 | 45 | 34 | M 16 | 14 | 49 | 115 | 60 | 0,91 |
| **38** | 38-40 | 95 | 51 | 39 | M 16 | 16 | 57 | 130 | 63 | 1,03 |
| **45** | 45 | 115 | 58 | 46 | M 16 | 16 | 70 | 158 | 83 | 1,45 |
| **50** | 50 | 115 | 59 | 46 | M 16 | 16 | 70 | 158 | 83 | 1,45 |

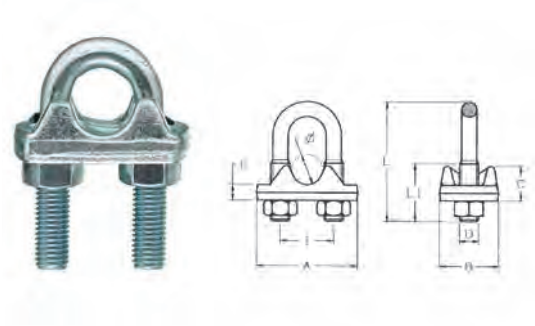

⚠ ✱

## A003

**WIRE ROPE CLIP CAST IRON DIN 741** - Body: Cast Iron  U-bolt: Steel

| Size mm | Rope mm | A mm | B mm | C mm | D mm | I mm | L mm | L1 mm | Weight Kg |
|---|---|---|---|---|---|---|---|---|---|
| **3** | 3 | 21 | 10 | 10 | M 4 | 9 | 20 | 12 | 0,008 |
| **5** | 5 | 24 | 11 | 10 | M 5 | 11 | 24 | 13 | 0,014 |
| **6** | 6,5 | 26 | 12 | 11 | M 5 | 13 | 28 | 15 | 0,016 |
| **8** | 8 | 30 | 14 | 15 | M 6 | 16 | 34 | 19 | 0,027 |
| **10** | 10 | 37 | 20 | 19 | M 8 | 20 | 42 | 22 | 0,057 |
| **11** | 11 | 38 | 20 | 20 | M 8 | 21 | 44 | 22 | 0,06 |
| **12** | 12 | 44 | 25 | 23 | M 10 | 25 | 55 | 30 | 0,113 |
| **14** | 14 | 46 | 25 | 25 | M 10 | 27 | 57 | 30 | 0,127 |
| **16** | 16 | 52 | 28 | 28 | M 12 | 30 | 63 | 33 | 0,15 |
| **20** | 19 | 58 | 32 | 34 | M 12 | 34 | 75 | 38 | 0,23 |
| **22** | 22 | 64 | 35 | 35 | M 14 | 38 | 85 | 44 | 0,27 |
| **26** | 26 | 68 | 38 | 38 | M 14 | 42 | 95 | 45 | 0,3 |
| **30** | 30 | 80 | 40 | 45 | M 16 | 50 | 110 | 50 | 0,5 |
| **32** | 32 | 80 | 40 | 45 | M 16 | 50 | 118 | 50 | 0,65 |
| **34** | 34 | 88 | 45 | 52 | M 16 | 54 | 120 | 55 | 0,68 |
| **40** | 40 | 95 | 48 | 58 | M 16 | 60 | 140 | 60 | 0,86 |

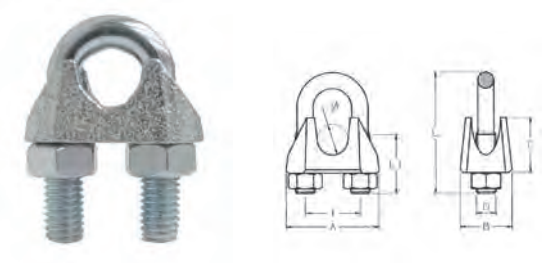

⚠ ✱

## A005

**WIRE ROPE CLIP UNI EN 13411-5** - Body: Cast Iron U-bolt: Steel

| Size mm | A mm | B mm | C mm | D | I mm | L mm | L1 mm | Weight Kg |
|---|---|---|---|---|---|---|---|---|
| **5** | 25 | 13 | 13 | M5 | 12 | 25 | 13 | 0,02 |
| **6,5** | 30 | 16 | 14 | M6 | 14 | 32 | 17 | 0,04 |
| **8** | 39 | 20 | 18 | M8 | 18 | 41 | 20 | 0,08 |
| **10** | 40 | 20 | 21 | M8 | 20 | 46 | 24 | 0,09 |
| **12** | 50 | 24 | 25 | M10 | 24 | 50 | 28 | 0,25 |
| **14** | 59 | 28 | 30 | M12 | 28 | 66 | 31 | 0,3 |
| **16** | 64 | 32 | 35 | M14 | 32 | 76 | 35 | 0,43 |
| **19** | 68 | 32 | 40 | M14 | 36 | 83 | 36 | 0,49 |
| **22** | 74 | 34 | 44 | M16 | 40 | 96 | 40 | 0,68 |
| **26** | 84 | 38 | 51 | M20 | 46 | 111 | 50 | 1,17 |
| **30** | 95 | 41 | 59 | M20 | 54 | 127 | 55 | 1,4 |
| **34** | 105 | 45 | 67 | M22 | 60 | 141 | 60 | 2,13 |
| **40** | 117 | 49 | 77 | M24 | 68 | 159 | 65 | 2,68 |



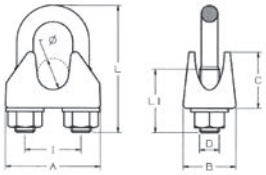

⚠*

## A006

**SIMPLEX WIRE ROPE CLIP** - Steel Fe 360B

| Size mm | A mm | B mm | C mm | D | E mm | F mm | G mm | Weight Kg |
|---|---|---|---|---|---|---|---|---|
| **2** | 17,5 | 12 | 5 | M 4 | 7,5 | 1 | 1 | 0,002 |
| **3** | 17,5 | 15 | 6,5 | M 4 | 10 | 1,5 | 1,5 | 0,002 |
| **4** | 22 | 18 | 7,5 | M 5 | 12 | 1,5 | 1,5 | 0,004 |
| **5** | 24 | 20 | 8,5 | M 5 | 14 | 1,5 | 1,5 | 0,004 |
| **6** | 30 | 23 | 10 | M 6 | 17 | 1,5 | 1,5 | 0,005 |
| **8** | 36 | 30 | 14 | M 8 | 22 | 2 | 2 | 0,05 |
| **10** | 42 | 34 | 16 | M 10 | 25 | 3 | 2 | 0,09 |



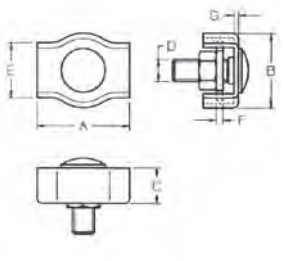

⚠*

## A007

**DUPLEX WIRE ROPE CLIP** - Steel Fe 360B

| Size mm | A mm | B mm | C mm | D | E mm | F mm | G mm | I mm | Weight Kg |
|---|---|---|---|---|---|---|---|---|---|
| **2** | 38 | 12 | 5 | M 4 | 7,5 | 1 | 1 | 20,5 | 0,01 |
| **3** | 38 | 15 | 6,5 | M 4 | 10 | 1,5 | 1,5 | 20,5 | 0,015 |
| **4** | 47 | 18 | 7,5 | M 5 | 12 | 1,5 | 1,5 | 25 | 0,025 |
| **5** | 51 | 20 | 8,5 | M 5 | 14 | 1,5 | 1,5 | 27 | 0,035 |
| **6** | 63 | 23 | 10 | M 6 | 17 | 1,5 | 1,5 | 33 | 0,05 |
| **8** | 76 | 30 | 14 | M 8 | 22 | 2 | 2 | 42 | 0,1 |
| **10** | 88 | 34 | 16 | M 10 | 25 | 3 | 2 | 46 | 0,18 |



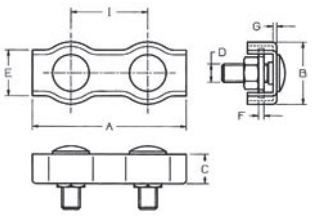

⚠*

## A008

**U-BOLT WITH 2 NUTS AND 2 WASHERS** - Steel Fe 430 B

| | Light | | | | | Heavy | | | | Extra Heavy | | | | | |
|---|---|---|---|---|---|---|---|---|---|---|---|---|---|---|---|
| Tube inch | A mm | C mm | D | G mm | Weight Kg | C mm | D | G mm | Weight Kg | Tube inch | A mm | C mm | D | G mm | Weight Kg |
| 1-8 | 11 | 30,5 | M 6 | 19 | 0,02 | | | | | 1/2" | 22 | 69 | M10 | 40 | 0,103 |
| 1-4 | 14 | 33 | M 6 | 19 | 0,021 | | | | | 3/4" | 27 | 75 | M10 | 40 | 0,11 |
| 3-8 | 18 | 36 | M 6 | 19 | 0,022 | | | | | 1 | 34 | 81 | M10 | 40 | 0,118 |
| 1-2 | 22 | 42 | M 6 | 25 | 0,024 | 51 | M 8 | 30 | 0,054 | 1" 1/4 | 43 | 91 | M10 | 40 | 0,13 |
| 3-4 | 27 | 46,5 | M 6 | 25 | 0,027 | 55,5 | M 8 | 30 | 0,057 | 1" 1/2 | 49 | 111 | M12 | 60 | 0,22 |
| 1 | 34 | 54 | M 6 | 25 | 0,03 | 63 | M 8 | 30 | 0,063 | 2 | 61 | 123 | M12 | 60 | 0,24 |
| 1 1/4 | 43 | 62,5 | M 6 | 25 | 0,033 | 71,5 | M 8 | 30 | 0,07 | 2" 1/2 | 77 | 139 | M12 | 60 | 0,27 |
| 1 1/2 | 49 | 72,5 | M 8 | 30 | 0,072 | 81,5 | M 10 | 40 | 0,132 | 3 | 89 | 151 | M12 | 60 | 0,25 |
| 2 | 61 | 84,5 | M 8 | 30 | 0,082 | 93,5 | M 10 | 40 | 0,146 | 3" 1/2 | 102 | 174 | M16 | 70 | |
| 2 1/2 | 77 | 100,5 | M 8 | 30 | 0,095 | 109,5 | M 10 | 40 | 0,168 | 4 | 115 | 188 | M16 | 70 | 0,56 |
| 3 | 89 | 112,5 | M 8 | 30 | 0,104 | 121,5 | M 10 | 40 | 0,183 | 5 | 140 | 212 | M16 | 70 | |
| 3 1/2 | 102 | 129 | M 8 | 35 | 0,117 | 142 | M 12 | 50 | 0,151 | 6 | 168 | 240 | M16 | 70 | |
| 4 | 115 | 141,5 | M 8 | 35 | 0,127 | 155,5 | M 12 | 50 | 0,163 | 8 | 220 | 303 | M20 | 80 | 1,65 |
| 5 | 140 | 169 | M 8 | 35 | 0,148 | 180 | M 12 | 50 | 0,372 | 10 | 274 | 357 | M20 | 80 | 1,93 |
| 6 | 168 | 202 | M 10 | 45 | 0,284 | 208 | M 12 | 50 | 0,424 | 12 | 324 | 418 | M24 | 90 | 3,18 |
| 8 | 220 | 254 | M 10 | 45 | 0,348 | 267 | M 16 | 60 | 0,992 | 14 | 356 | 450 | M24 | 90 | 3,42 |
| 10 | 274 | 308 | M 10 | 45 | 0,418 | 321 | M 16 | 60 | 1,18 | 16 | 408 | 502 | M24 | 90 | 3,8 |
| | | | | | | | | | | 18 | 460 | 554 | M24 | 90 | 4,18 |
| | | | | | | | | | | 20 | 510 | 604 | M24 | 90 | 4,54 |
| | | | | | | | | | | 24 | 612 | 706 | M24 | 90 | 5,3 |



⚠ *

## A009

**TURNBUCKLE EYE AND EYE** - Steel Fe 430 B

| Size mm | A mm | B mm | C mm | D mm | E mm | F mm | L1 mm | L2 mm | S.W.L. Kg | Weight Kg |
|---|---|---|---|---|---|---|---|---|---|---|
| M 5 | 9 | 79 | 59 | 40 | 8 | 4 | 110 | 170 | 140 | 0,04 |
| M 6 | 10 | 88 | 74 | 50 | 10 | 4 | 140 | 208 | 225 | 0,06 |
| M 8 | 12 | 110 | 80 | 52 | 11 | 5 | 150 | 236 | 410 | 0,15 |
| M 10 | 15 | 130 | 97 | 60 | 14 | 6,5 | 180 | 280 | 650 | 0,21 |
| M 12 | 18 | 140 | 106 | 67 | 17 | 8 | 196 | 300 | 930 | 0,34 |
| M 14 | 20 | 170 | 126 | 83 | 18 | 8,5 | 233 | 365 | 1330 | 0,5 |
| M 16 | 22,5 | 190 | 160 | 97 | 23 | 13 | 294 | 440 | 1770 | 0,93 |
| M 18 | 27 | 200 | 178 | 112 | 25 | 14 | 328 | 474 | 2200 | 1,38 |
| M 20 | 30 | 220 | 190 | 116 | 25 | 14 | 352 | 510 | 2700 | 1,42 |
| M 22 | 33 | 242 | 200 | 120 | 30 | 16 | 368 | 544 | 3300 | 2,11 |
| M 24 | 39 | 255 | 210 | 125 | 34 | 17 | 386 | 563 | 3920 | 2,76 |
| M 27 | 45 | 255 | 236 | 150 | 34 | 18,5 | 433 | 600 | 4950 | 3,91 |
| M 30 | 45 | 255 | 242 | 150 | 39 | 21 | 441 | 603 | 6250 | 4,05 |
| M 33 | 45 | 295 | 242 | 150 | 39 | 21 | 442 | 627 | 7560 | 5,75 |
| M 36 | 55 | 295 | 276 | 165 | 49 | 28 | 498 | 680 | 9100 | 7,25 |
| M 39 | 63 | 330 | 276 | 165 | 49 | 28 | 496 | 700 | 10600 | 9,36 |
| M 42 | 63 | 330 | 320 | 180 | 55 | 40 | 560 | 764 | 12500 | 13,96 |
| M 45 | 78 | 355 | 322 | 180 | 55 | 40 | 564 | 763 | 14400 | 19,1 |
| M 48 | 78 | 355 | 322 | 180 | 55 | 40 | 564 | 763 | 16500 | 19,3 |



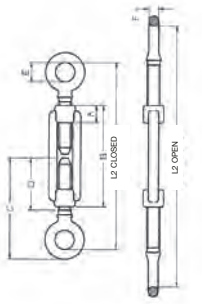


⚠ *

## A157

**TURNBUCKLE EYE AND EYE** - Cast Iron

| Size mm | A mm | B mm | C mm | D mm | E mm | F mm | L1 mm | L2 mm | Weight Kg |
|---|---|---|---|---|---|---|---|---|---|
| M 5 | 9 | 79 | 56 | 38 | 8 | 4 | 109 | 166 | 0,03 |
| M 6 | 9 | 88 | 65 | 39 | 10 | 4 | 119 | 186 | 0,05 |
| M 8 | 12 | 110 | 75 | 47 | 11 | 5 | 154 | 230 | 0,09 |
| M 10 | 15 | 126 | 90 | 58 | 14 | 7 | 179 | 273 | 0,16 |
| M 12 | 17 | 137 | 100 | 67 | 16 | 7 | 187 | 289 | 0,24 |
| M 14 | 19 | 168 | 117 | 78 | 18 | 9 | 241 | 361 | 0,4 |
| M 16 | 22 | 188 | 133 | 94 | 22 | 9 | 258 | 388 | 0,6 |
| M 18 | 25 | 200 | 145 | 98 | 23 | 11 | 275 | 424 | 0,85 |
| M 20 | 25 | 217 | 152 | 98 | 24 | 12 | 292 | 445 | 1,06 |
| M 22 | 30 | 237 | 181 | 112 | 28 | 13 | 370 | 535 | 1,59 |
| M 24 | 37 | 252 | 187 | 118 | 30 | 14 | 352 | 525 | 1,99 |



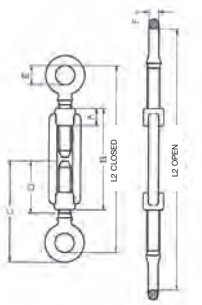


⚠ *

## A010

**TURNBUCKLE EYE AND HOOK** - Steel Fe 430B

| Size mm | A mm | B mm | C mm | D mm | E mm | F mm | G mm | H mm | L1 mm | L2 mm | S.W.L. Kg | Weight Kg |
|---|---|---|---|---|---|---|---|---|---|---|---|---|
| M 5 | 9 | 79 | 59 | 40 | 8 | 62 | 40 | 6 | 110 | 172 | 50 | 0,05 |
| M 6 | 10 | 88 | 74 | 50 | 10 | 76 | 50 | 8,5 | 140 | 208 | 75 | 0,06 |
| M 8 | 12 | 110 | 80 | 52 | 11 | 89 | 52 | 10 | 155 | 240 | 165 | 0,12 |
| M 10 | 15 | 130 | 97 | 60 | 14 | 103 | 62 | 12 | 184 | 284 | 235 | 0,24 |
| M 12 | 18 | 140 | 106 | 67 | 17 | 121 | 65 | 16 | 208 | 312 | 320 | 0,38 |
| M 14 | 20 | 170 | 126 | 83 | 18 | 144 | 82 | 16 | 247 | 377 | 420 | 0,56 |
| M 16 | 22,5 | 190 | 160 | 97 | 23 | 172 | 105 | 16,5 | 302 | 450 | 530 | 0,94 |
| M 18 | 27 | 200 | 178 | 112 | 25 | 183 | 110 | 17 | 329 | 475 | 630 | 1,35 |
| M 20 | 30 | 220 | 190 | 116 | 25 | 185 | 110 | 17,5 | 340 | 500 | 730 | 1,48 |
| M 22 | 36 | 220 | 200 | 120 | 30 | 216 | 125 | 23 | 379 | 527 | 1120 | 2,13 |
| M 24 | 39 | 255 | 210 | 125 | 34 | 225 | 125 | 23 | 390 | 568 | 1550 | 2,84 |
| M 27 | 45 | 255 | 236 | 150 | 34 | 250 | 146 | 29 | 437 | 602 | 1870 | 3,89 |
| M 30 | 45 | 255 | 242 | 150 | 39 | 250 | 140 | 30 | 439 | 604 | 2240 | 4,15 |
| M 33 | 45 | 255 | 242 | 150 | 39 | 250 | 140 | 30 | 440 | 606 | 2850 | 5,88 |
| M 36 | 55 | 295 | 276 | 165 | 49 | 288 | 170 | 30 | 497 | 682 | 3530 | 7,53 |
| M 39 | 63 | 330 | 276 | 165 | 49 | 288 | 170 | 30 | 505 | 709 | 4150 | 9,82 |



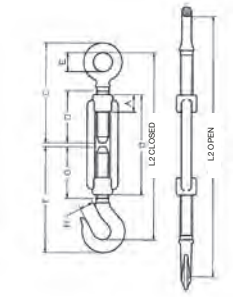


⚠ *

## A158

**TURNBUCKLE EYE AND HOOK** - Cast Iron

| Size mm | A mm | B mm | C mm | D mm | E mm | F mm | G mm | H mm | L1 mm | L2 mm | Weight Kg |
|---|---|---|---|---|---|---|---|---|---|---|---|
| M 5 | 9 | 79 | 56 | 38 | 8 | 60 | 37 | 6 | 109 | 167 | 0,03 |
| M 6 | 9 | 88 | 65 | 39 | 10 | 68 | 39 | 9 | 122 | 190 | 0,05 |
| M 8 | 12 | 110 | 75 | 47 | 11 | 88 | 52 | 11 | 155 | 232 | 0,1 |
| M 10 | 15 | 126 | 90 | 58 | 14 | 101 | 60 | 12 | 181 | 275 | 0,17 |
| M 12 | 17 | 137 | 100 | 67 | 16 | 111 | 61 | 15 | 195 | 291 | 0,27 |
| M 14 | 19 | 168 | 117 | 78 | 18 | 131 | 75 | 16 | 236 | 354 | 0,44 |
| M 16 | 22 | 188 | 133 | 94 | 22 | 153 | 88 | 17 | 266 | 404 | 0,66 |
| M 18 | 25 | 200 | 145 | 98 | 23 | 173 | 97 | 19 | 297 | 437 | 0,94 |
| M 20 | 25 | 217 | 152 | 98 | 24 | 180 | 98 | 20 | 310 | 464 | 1,17 |
| M 22 | 30 | 237 | 181 | 112 | 28 | 192 | 110 | 23 | 343 | 515 | 1,72 |
| M 24 | 37 | 252 | 187 | 118 | 30 | 192 | 110 | 24 | 358 | 520 | 2,14 |



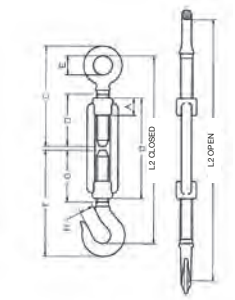


⚠ *

## A011

**TURNBUCKLE HOOK AND HOOK** - Steel Fe 430B

| Size mm | A mm | B mm | C mm | D mm | E mm | L1 mm | L2 mm | S.W.L. Kg | Weight Kg |
|---|---|---|---|---|---|---|---|---|---|
| M 5 | 9 | 79 | 62 | 40 | 6 | 112 | 173 | 50 | 0,05 |
| M 6 | 10 | 88 | 76 | 50 | 8,5 | 140 | 208 | 75 | 0,07 |
| M 8 | 12 | 110 | 89 | 52 | 10 | 160 | 246 | 165 | 0,12 |
| M 10 | 15 | 130 | 103 | 62 | 12 | 188 | 288 | 235 | 0,27 |
| M 12 | 18 | 140 | 121 | 65 | 16 | 220 | 324 | 320 | 0,42 |
| M 14 | 20 | 170 | 144 | 82 | 16 | 260 | 390 | 420 | 0,62 |
| M 16 | 22,5 | 190 | 172 | 105 | 16,5 | 312 | 452 | 530 | 0,95 |
| M 18 | 27 | 200 | 183 | 110 | 17 | 330 | 476 | 630 | 1,3 |
| M 20 | 30 | 220 | 185 | 110 | 17,5 | 330 | 490 | 730 | 1,54 |
| M 22 | 33 | 242 | 216 | 125 | 23 | 390 | 566 | 1120 | 2,25 |
| M 24 | 39 | 255 | 225 | 125 | 23 | 396 | 573 | 1550 | 2,92 |
| M 27 | 45 | 255 | 250 | 146 | 29 | 440 | 605 | 1870 | 3,87 |
| M 30 | 45 | 255 | 250 | 140 | 30 | 440 | 605 | 2240 | 4,25 |
| M 33 | 45 | 255 | 250 | 140 | 30 | 440 | 605 | 2850 | 6,01 |
| M 36 | 55 | 295 | 288 | 170 | 30 | 498 | 683 | 3530 | 7,81 |
| M 39 | 63 | 330 | 288 | 170 | 30 | 514 | 718 | 4150 | 9,4 |



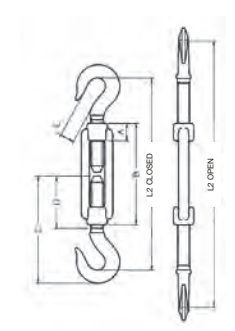


⚠ *

## A159

**TURNBUCKLE HOOK AND HOOK** - Cast Iron

| Size mm | A mm | B mm | C mm | D mm | E mm | L1 mm | L2 mm | Weight Kg |
|---|---|---|---|---|---|---|---|---|
| M 5 | 9 | 79 | 60 | 37 | 6 | 109 | 167 | 0,03 |
| M 6 | 9 | 88 | 68 | 39 | 9 | 122 | 190 | 0,05 |
| M 8 | 12 | 110 | 88 | 52 | 11 | 157 | 231 | 0,11 |
| M 10 | 15 | 126 | 101 | 60 | 12 | 181 | 274 | 0,18 |
| M 12 | 17 | 137 | 111 | 61 | 15 | 195 | 290 | 0,29 |
| M 14 | 19 | 168 | 131 | 75 | 16 | 236 | 354 | 0,48 |
| M 16 | 22 | 188 | 153 | 88 | 17 | 266 | 404 | 0,72 |
| M 18 | 25 | 200 | 173 | 97 | 19 | 306 | 443 | 1,03 |
| M 20 | 25 | 217 | 180 | 98 | 20 | 330 | 473 | 1,28 |
| M 22 | 30 | 237 | 192 | 110 | 23 | 345 | 515 | 1,85 |
| M 24 | 37 | 252 | 192 | 110 | 24 | 360 | 524 | 2,27 |



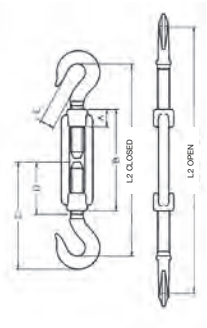


⚠ *

## A160

**TURNBUCKLE JAW AND JAW DIN 1480** - Steel Fe 430B

| Size mm | A mm | B mm | C mm | D mm | E mm | F mm | G mm | H mm | L1 mm | L2 mm | Bolt mm | S.W.L. Kg | Weight Kg |
|---|---|---|---|---|---|---|---|---|---|---|---|---|---|
| M 6 | 12 | 110 | 55 | 7 | 19 | 19 | 12 | 87 | 174 | 260 | 5 x 25 | 230 | 0,09 |
| M 8 | 15 | 110 | 55 | 9 | 23 | 25 | 14 | 95 | 190 | 270 | 6 x 31 | 300 | 0,22 |
| M 10 | 18 | 125 | 68 | 11 | 26 | 25 | 17 | 111 | 222 | 312 | 8 x 36 | 470 | 0,33 |
| M 12 | 21 | 125 | 69 | 15 | 32 | 37 | 24 | 122 | 235 | 310 | 10 x 40 | 690 | 0,58 |
| M 14 | 22 | 140 | 91 | 19 | 37 | 43 | 30 | 155 | 310 | 395 | 12 x 50 | 940 | 1,04 |
| M 16 | 27 | 170 | 91 | 25 | 41 | 48 | 32 | 166 | 332 | 435 | 12 x 50 | 1290 | 1,21 |
| M 18 | 27 | 180 | 91 | 25 | 50 | 48 | 38 | 170 | 337 | 460 | 15 x 68 | 1660 | 2,02 |
| M 20 | 34 | 200 | 120 | 25 | 50 | 48 | 40 | 200 | 378 | 510 | 16 x 60 | 2130 | 2,14 |
| M 22 | 36 | 220 | 120 | 30 | 61 | 55 | 45 | 230 | 445 | 585 | 20 x 65 | 2630 | 3,37 |
| M 24 | 39 | 255 | 130 | 31 | 65 | 66 | 52 | 247 | 494 | 672 | 22 x 75 | 3060 | 3,77 |
| M 27 | 45 | 255 | 130 | 28 | 72 | 62 | 48 | 226 | 452 | 617 | 24 x 95 | 4000 | 6,12 |
| M 30 | 45 | 255 | 130 | 38 | 92 | 79 | 56 | 257 | 514 | 679 | 27 x 120 | 4860 | 7,54 |
| M 33 | 48 | 295 | 150 | 38 | 92 | 85 | 60 | 278 | 556 | 755 | 30 x 115 | 6040 | 8,94 |
| M 36 | 55 | 295 | 170 | 60 | 97 | 94 | 76 | 315 | 640 | 830 | 35 x 135 | 6500 | 12,98 |
| M 39 | 58 | 330 | 170 | 45 | 85 | 86 | 76 | 297 | 594 | 808 | 33 x 118 | 7000 | 16,01 |



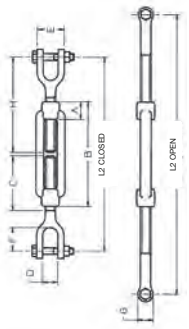


⚠ *

NEW

## A202

**TURNBUCKLE EYE-JAW DIN 1480** - Steel Fe 430B

| Size mm | A mm | B mm | C mm | D mm | E mm | F mm | F1 mm | G mm | H mm | L1 mm | L2 mm | Bolt mm | S.W.L. Kg | Weight Kg |
|---|---|---|---|---|---|---|---|---|---|---|---|---|---|---|
| M 8 | 15 | 110 | 55 | 12 | 11 | 25 | 5,5 | 17 | 78 | 196 | 274 | 6x35 | 300 | 0,18 |
| M 10 | 18 | 125 | 68 | 13 | 14 | 28 | 6 | 20 | 92 | 217 | 285 | 8x36 | 470 | 0,28 |
| M 12 | 21 | 125 | 69 | 15 | 17 | 37 | 8,5 | 24 | 115 | 236 | 322 | 10x45 | 690 | 0,48 |
| M 14 | 22 | 140 | 91 | 19 | 18 | 43 | 9,5 | 30 | 122 | 275 | 360 | 12x50 | 940 | 0,66 |
| M 16 | 27 | 160 | 91 | 20 | 22 | 45 | 11 | 32 | 144 | 305 | 420 | 12x50 | 1290 | 1,21 |
| M 20 | 34 | 200 | 120 | 25 | 24 | 48 | 13 | 40 | 166 | 354 | 487 | 16x65 | 2130 | 1,8 |
| M 22 | 36 | 220 | 120 | 30 | 29 | 55 | 16 | 45 | 175 | 400 | 530 | 20x78 | 2630 | 2,69 |
| M 24 | 39 | 255 | 130 | 31 | 29 | 66 | 16,5 | 52 | 211 | 460 | 615 | 22x87 | 3060 | 3,21 |



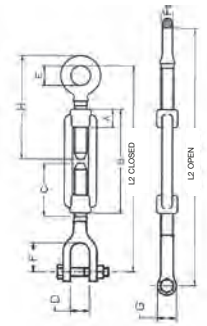


⚠ *

## A014

**BODY FOR TURNBUCKLE** - Steel Fe 430B

| Size mm | A mm | B mm | C mm | E mm | F mm | G mm | H mm | S.W.L. Kg | Weight Kg |
|---|---|---|---|---|---|---|---|---|---|
| M 5 | 9 | 60 | 79 | 5 | 9 | 7 | 16,5 | 140 | 0,03 |
| M 6 | 10 | 68 | 88 | 6 | 10 | 7,5 | 17,5 | 225 | 0,03 |
| M 8 | 12 | 86 | 110 | 7 | 14 | 9,5 | 22 | 410 | 0,06 |
| M 10 | 15 | 100 | 130 | 8 | 16 | 12 | 27 | 650 | 0,11 |
| M 12 | 18 | 104 | 140 | 10 | 20 | 14 | 30 | 930 | 0,16 |
| M 14 | 20 | 130 | 170 | 11 | 22 | 18 | 36 | 1330 | 0,24 |
| M 16 | 22,5 | 145 | 190 | 13 | 25 | 20 | 40 | 1770 | 0,37 |
| M 18 | 27 | 146 | 200 | 15 | 30 | 22 | 45 | 2200 | 0,66 |
| M 20 | 30 | 160 | 220 | 16 | 32 | 24 | 49 | 2700 | 0,66 |
| M 22 | 33 | 176 | 242 | 18 | 37 | 29 | 55 | 3300 | 0,97 |
| M 24 | 39 | 177 | 255 | 20 | 39 | 30 | 60 | 3920 | 1,23 |
| M 27 | 43 | 214 | 300 | 23 | 45 | 32 | 70 | 4950 | 1,85 |
| M 30 | 45 | 165 | 255 | 23 | 45 | 34 | 74 | 6250 | 1,85 |
| M 33 | 48 | 204 | 300 | 28 | 52 | 36 | 80 | 7560 | 2,96 |
| M 36 | 55 | 185 | 295 | 28 | 55 | 40 | 86 | 9100 | 3,15 |
| M 39 | 58 | 194 | 310 | 32 | 61 | 43 | 94 | 10600 | 4,04 |
| M 42 | 63 | 204 | 330 | 32 | 63 | 50 | 104 | 12500 | 6,5 |
| M 45 | 78 | 199 | 355 | 40 | 80 | 65 | 135 | 14400 | 9,1 |
| M 48 | 78 | 199 | 355 | 40 | 80 | 65 | 135 | 16500 | 9,1 |
| M 52 | 78 | 199 | 355 | 40 | 80 | 65 | 135 | 18100 | 9,1 |
| M 56 | 78 | 199 | 355 | 40 | 80 | 65 | 135 | 23000 | 9,1 |



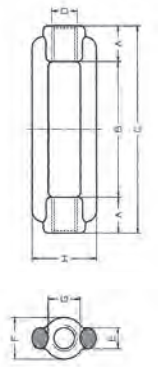

⚠ *

## A015

**EYE SCREW FOR PLUGS** - Steel Fe 430B

| Size mm | A mm | B mm | C mm | D mm | L mm | S.W.L. Kg | Weight Kg |
|---|---|---|---|---|---|---|---|
| M 5 | 8 | 16 | 50 | 4 | 69 | 140 | 0,011 |
| M 6 | 10 | 18 | 55 | 4 | 79 | 225 | 0,016 |
| M 8 | 11 | 21 | 60 | 5 | 88 | 410 | 0,035 |
| M 10 | 14 | 27 | 73 | 6,5 | 110 | 650 | 0,06 |
| M 12 | 17 | 33 | 90 | 8 | 129 | 930 | 0,11 |



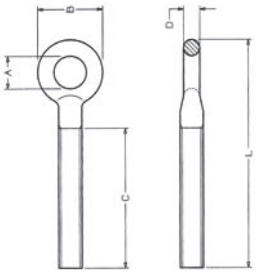

⚠ *

## A016

**EYE FOR TURNBUCKLE** - Steel Fe 430B

| Size mm | A mm | B mm | C mm | D mm | L mm | S.W.L. Kg | Weight Kg |
|---|---|---|---|---|---|---|---|
| M 5 | 8 | 16 | 40 | 4 | 59 | 140 | 0,01 |
| M 6 | 10 | 18 | 50 | 4 | 74 | 225 | 0,01 |
| M 8 | 11 | 21 | 52 | 5 | 80 | 410 | 0,03 |
| M 10 | 14 | 27 | 60 | 6,5 | 97 | 650 | 0,05 |
| M 12 | 17 | 33 | 67 | 8 | 106 | 930 | 0,09 |
| M 14 | 18 | 35 | 83 | 8,5 | 126 | 1330 | 0,13 |
| M 16 | 23 | 49 | 97 | 13 | 160 | 1770 | 0,28 |
| M 18 | 25 | 53 | 112 | 14 | 178 | 2200 | 0,36 |
| M 20 | 25 | 53 | 116 | 14 | 190 | 2700 | 0,38 |
| M 22 | 30 | 62 | 120 | 16 | 200 | 3300 | 0,57 |
| M 24 | 34 | 68 | 125 | 17 | 210 | 3920 | 0,71 |
| M 27 | 34 | 71 | 150 | 18,5 | 236 | 4950 | 1,05 |
| M 30 | 39 | 81 | 150 | 21 | 242 | 6250 | 1,1 |
| M 33 | 39 | 81 | 150 | 21 | 242 | 7560 | 1,3 |
| M 36 | 49 | 105 | 150 | 28 | 276 | 9100 | 2,05 |
| M 39 | 49 | 105 | 165 | 28 | 276 | 10600 | 2,38 |
| M 42 | 55 | 135 | 180 | 40 | 320 | 12500 | 4,8 |
| M 45 | 55 | 135 | 180 | 40 | 322 | 14400 | 5,05 |
| M 48 | 55 | 135 | 180 | 40 | 322 | 16500 | 5,2 |
| M 50 | 55 | 135 | 180 | 40 | 322 | 18100 | 5,87 |



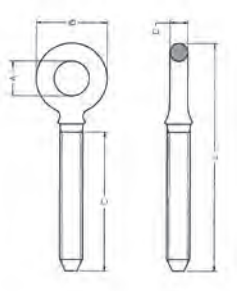

⚠ *

## A017

**HOOK FOR TURNBUCKLE** - Steel Fe 430B

| Size mm | A mm | B mm | C mm | D mm | E mm | F mm | L mm | S.W.L. Kg | Weight Kg |
|---|---|---|---|---|---|---|---|---|---|
| M 5 | 56 | 7,5 | 40 | 17,5 | 6 | 4 | 62 | 50 | 0,01 |
| M 6 | 70 | 10 | 50 | 23 | 8 | 5 | 76 | 75 | 0,01 |
| M 8 | 80 | 11 | 52 | 29 | 10 | 6 | 89 | 165 | 0,03 |
| M 10 | 94 | 14 | 62 | 35 | 13 | 8 | 103 | 235 | 0,06 |
| M 12 | 110 | 17 | 65 | 47 | 17 | 10 | 121 | 320 | 0,13 |
| M 14 | 130 | 17 | 82 | 48 | 14 | 11,5 | 144 | 420 | 0,19 |
| M 16 | 152 | 19,5 | 100 | 55 | 16,5 | 14 | 168 | 530 | 0,29 |
| M 18 | 165 | 19 | 110 | 61 | 17 | 14 | 183 | 630 | 0,35 |
| M 20 | 165 | 23 | 110 | 64 | 17 | 15 | 185 | 730 | 0,44 |
| M 22 | 195 | 27 | 125 | 71 | 22 | 17 | 216 | 1120 | 0,64 |
| M 24 | 198 | 27 | 125 | 77 | 23 | 18 | 225 | 1550 | 0,79 |
| M 27 | 220 | 32 | 146 | 90 | 29 | 20 | 250 | 1870 | 1,03 |
| M 30 | 220 | 34 | 140 | 93 | 30 | 20 | 250 | 2240 | 1,2 |
| M 33 | 220 | 34 | 140 | 93 | 30 | 21 | 250 | 2850 | 1,43 |
| M 36 | 253 | 36 | 170 | 108 | 30 | 32 | 288 | 3530 | 2,33 |
| M 39 | 257 | 36 | 170 | 108 | 30 | 32 | 288 | 4150 | 2,4 |



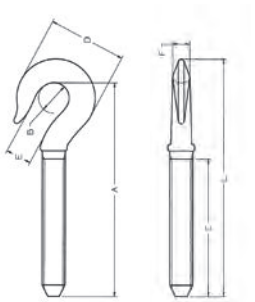

⚠ *

## A018

**HOOK FOR PLUGS** - Steel Fe 430B

| Size mm | A mm | B mm | C mm | D mm | E mm | F mm | L mm | S.W.L. Kg | Weight Kg |
|---|---|---|---|---|---|---|---|---|---|
| M 5 | 64 | 8 | 48 | 16,5 | 6 | 4 | 70 | 50 | 0,012 |
| M 6 | 75 | 10 | 55 | 21 | 8,5 | 5 | 81 | 75 | 0,018 |
| M 8 | 88 | 11 | 60 | 27 | 10 | 6 | 97 | 165 | 0,035 |
| M 10 | 105 | 14 | 73 | 33 | 12 | 8 | 114 | 235 | 0,07 |
| M 12 | 135 | 17 | 90 | 42 | 16 | 10 | 146 | 320 | 0,13 |



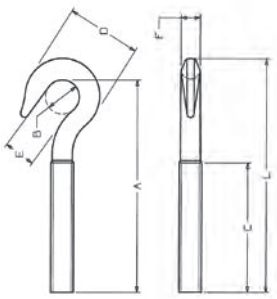

⚠ *

## A019

**TURNBUCKLE STUBEND** - Steel Fe 430B

| Size mm | D mm | L mm | L1 mm | Weight Kg |
|---|---|---|---|---|
| M 5 | 4,35 | 75 | 35 | 0,02 |
| M 6 | 5,35 | 120 | 60 | 0,02 |
| M 8 | 7,05 | 120 | 65 | 0,04 |
| M 10 | 8,8 | 150 | 75 | 0,08 |
| M 11 | 9,8 | 150 | 75 | 0,1 |
| M 12 | 10,7 | 150 | 75 | 0,12 |
| M 14 | 12,7 | 180 | 90 | 0,18 |
| M 16 | 14,5 | 200 | 100 | 0,29 |
| M 18 | 16,3 | 220 | 120 | 0,4 |
| M 20 | 18,7 | 220 | 120 | 0,48 |
| M 22 | 21,7 | 240 | 130 | 0,73 |
| M 24 | 22,5 | 260 | 150 | 0,8 |
| M 27 | 24,8 | 260 | 160 | 1,17 |
| M 30 | 27,5 | 260 | 175 | 1,3 |
| M 33 | 30,7 | 300 | 190 | 1,71 |
| M 36 | 33,1 | 300 | 190 | 2,01 |
| M 39 | 39 | 350 | 210 | 2,86 |
| M 42 | 42 | 350 | 210 | 3,41 |
| M 45 | 45 | 350 | 210 | 3,95 |
| M 48 | 48 | 380 | 220 | 4,84 |
| M 50 | 50 | 380 | 220 | 5 |
| M 52 | 52 | 380 | 220 | 5,1 |
| M 56 | 56 | 410 | 240 | 5,8 |





⚠ *

## A161

**TURNBUCKLE EYE AND EYE DIN 1480** - Steel Fe 430B

| Size mm | A mm | B mm | C mm | D mm | E mm | F mm | L1 mm | L2 mm | S.W.L. Kg | Weight Kg |
|---|---|---|---|---|---|---|---|---|---|---|
| M 6 | 12 | 110 | 74 | 50 | 10 | 4 | 140 | 226 | 225 | 0,08 |
| M 8 | 15 | 110 | 80 | 52 | 11 | 5 | 150 | 230 | 410 | 0,14 |
| M 10 | 18 | 125 | 97 | 60 | 14 | 6,5 | 181 | 270 | 650 | 0,25 |
| M 12 | 21 | 125 | 106 | 67 | 17 | 8 | 194 | 279 | 930 | 0,37 |
| M 14 | 24 | 140 | 126 | 83 | 18 | 8,5 | 235 | 332 | 1330 | 0,51 |
| M 16 | 27 | 170 | 160 | 97 | 23 | 13 | 294 | 410 | 1770 | 0,95 |
| M 20 | 34 | 200 | 190 | 116 | 25 | 14 | 352 | 484 | 2700 | 1,48 |
| M 22 | 36 | 220 | 200 | 120 | 30 | 16 | 368 | 516 | 3300 | 2,06 |
| M 24 | 39 | 255 | 210 | 125 | 34 | 17 | 386 | 563 | 3920 | 2,76 |
| M 27 | 45 | 255 | 236 | 150 | 34 | 18,5 | 435 | 600 | 4950 | 3,91 |
| M 30 | 45 | 255 | 242 | 150 | 39 | 21 | 441 | 603 | 6250 | 4,05 |
| M 33 | 55 | 295 | 242 | 150 | 39 | 21 | 442 | 627 | 7560 | 5,75 |
| M 36 | 55 | 295 | 276 | 165 | 49 | 28 | 498 | 681 | 9100 | 7,25 |
| M 39 | 63 | 330 | 276 | 165 | 49 | 28 | 496 | 700 | 10600 | 9,36 |
| M 42 | 63 | 330 | 320 | 180 | 55 | 40 | 560 | 764 | 12500 | 14 |
| M 45 | 78 | 355 | 322 | 180 | 55 | 40 | 564 | 763 | 14400 | 19,1 |
| M 48 | 78 | 355 | 322 | 180 | 55 | 40 | 564 | 763 | 16500 | 19,3 |
| M 52 | 78 | 355 | 322 | 180 | 60 | 40 | 564 | 763 | 19800 | 19,3 |

⚠ *



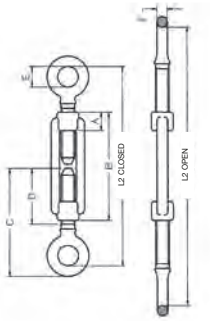


## A162

**TURNBUCKLE EYE AND HOOK DIN 1480** - Steel Fe 430B

| Size mm | A mm | B mm | C mm | D mm | E mm | F mm | G mm | H mm | L1 mm | L2 mm | S.W.L. Kg | Weight Kg |
|---|---|---|---|---|---|---|---|---|---|---|---|---|
| M 6 | 12 | 110 | 74 | 50 | 10 | 76 | 50 | 8 | 140 | 226 | 75 | 0,09 |
| M 8 | 15 | 110 | 80 | 52 | 11 | 89 | 52 | 10 | 155 | 235 | 165 | 0,14 |
| M 10 | 18 | 125 | 97 | 60 | 14 | 103 | 62 | 13 | 185 | 273 | 235 | 0,28 |
| M 12 | 21 | 125 | 106 | 67 | 17 | 121 | 65 | 17 | 208 | 290 | 320 | 0,41 |
| M 14 | 24 | 140 | 126 | 83 | 18 | 144 | 82 | 14 | 248 | 344 | 420 | 0,57 |
| M 16 | 27 | 170 | 160 | 97 | 23 | 168 | 100 | 16,5 | 303 | 419 | 530 | 0,96 |
| M 20 | 34 | 200 | 190 | 116 | 25 | 185 | 110 | 17 | 341 | 473 | 730 | 1,54 |
| M 22 | 36 | 220 | 200 | 120 | 30 | 216 | 125 | 22 | 379 | 527 | 1120 | 2,13 |
| M 24 | 39 | 255 | 210 | 125 | 34 | 225 | 125 | 23 | 391 | 568 | 1550 | 2,84 |
| M 27 | 45 | 255 | 236 | 150 | 34 | 250 | 146 | 29 | 437 | 602 | 1870 | 3,89 |
| M 30 | 45 | 255 | 242 | 150 | 39 | 250 | 140 | 30 | 439 | 604 | 2240 | 4,15 |
| M 33 | 55 | 295 | 242 | 150 | 39 | 250 | 140 | 30 | 441 | 626 | 2850 | 5,88 |
| M 36 | 55 | 295 | 276 | 165 | 49 | 288 | 170 | 30 | 497 | 682 | 3530 | 7,53 |
| M 39 | 63 | 330 | 276 | 165 | 49 | 288 | 170 | 30 | 505 | 709 | 4150 | 9,38 |

⚠ *



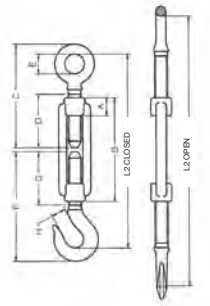


## A163

**TURNBUCKLE HOOK AND HOOK DIN 1480** - Steel Fe 430B

| Size mm | A mm | B mm | C mm | D mm | E mm | L1 mm | L2 mm | S.W.L. Kg | Weight Kg |
|---|---|---|---|---|---|---|---|---|---|
| M 6 | 12 | 110 | 76 | 50 | 8 | 140 | 226 | 75 | 0,1 |
| M 8 | 15 | 110 | 89 | 52 | 10 | 160 | 240 | 165 | 0,14 |
| M 10 | 18 | 125 | 103 | 62 | 13 | 188 | 277 | 235 | 0,31 |
| M 12 | 21 | 125 | 121 | 65 | 17 | 220 | 303 | 320 | 0,45 |
| M 14 | 24 | 140 | 144 | 82 | 14 | 260 | 357 | 420 | 0,63 |
| M 16 | 27 | 170 | 168 | 100 | 16,5 | 308 | 428 | 530 | 0,97 |
| M 20 | 34 | 200 | 185 | 110 | 17 | 330 | 462 | 730 | 1,6 |
| M 22 | 36 | 220 | 216 | 125 | 22 | 390 | 538 | 1120 | 2,2 |
| M 24 | 39 | 255 | 225 | 125 | 23 | 396 | 573 | 1550 | 2,92 |
| M 27 | 45 | 255 | 250 | 146 | 29 | 440 | 605 | 1870 | 3,87 |
| M 30 | 45 | 255 | 250 | 140 | 30 | 440 | 605 | 2240 | 4,25 |
| M 33 | 55 | 295 | 250 | 140 | 30 | 440 | 625 | 2850 | 6,01 |
| M 36 | 55 | 295 | 288 | 170 | 30 | 498 | 683 | 3530 | 7,81 |
| M 39 | 63 | 330 | 288 | 170 | 30 | 598 | 760 | 4150 | 9,4 |

⚠ *



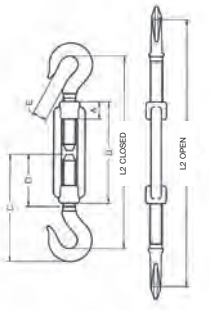

## A171

**TURNBUCKLE WITH STUBENDS DIN 1480** - Steel Fe 430B

| Size mm | A mm | B mm | C mm | D mm | E mm | L1 mm | L2 mm | S.W.L. Kg | Weight Kg |
|---|---|---|---|---|---|---|---|---|---|
| M 6 | 12 | 110 | 120 | 60 | 5,35 | 240 | 338 | 225 | 0,1 |
| M 8 | 15 | 110 | 120 | 65 | 7,05 | 240 | 338 | 410 | 0,16 |
| M 10 | 18 | 125 | 150 | 75 | 8,8 | 300 | 407 | 650 | 0,31 |
| M 12 | 21 | 125 | 150 | 75 | 10,7 | 300 | 407 | 930 | 0,43 |
| M 14 | 24 | 140 | 180 | 90 | 12,7 | 360 | 477 | 1320 | 0,61 |
| M 16 | 27 | 170 | 200 | 100 | 14,5 | 400 | 543 | 1770 | 0,97 |
| M 20 | 34 | 200 | 220 | 120 | 18,7 | 440 | 606 | 2700 | 1,7 |
| M 22 | 36 | 220 | 240 | 130 | 21,7 | 480 | 664 | 3300 | 2,38 |
| M 24 | 39 | 255 | 260 | 150 | 22,5 | 520 | 736 | 3920 | 2,94 |
| M 27 | 45 | 255 | 260 | 160 | 24,8 | 520 | 736 | 4950 | 4,15 |
| M 30 | 45 | 255 | 260 | 175 | 27,5 | 520 | 736 | 6250 | 4,45 |
| M 33 | 55 | 295 | 300 | 190 | 30,7 | 600 | 810 | 7560 | 6,57 |
| M 36 | 55 | 295 | 300 | 190 | 33,1 | 600 | 840 | 9100 | 7,17 |
| M 39 | 63 | 330 | 350 | 210 | 39 | 700 | 967 | 10600 | 10,32 |
| M 42 | 63 | 330 | 350 | 210 | 42 | 700 | 967 | 12500 | 11,18 |
| M 45 | 78 | 355 | 350 | 210 | 45 | 700 | 977 | 14400 | 16,9 |
| M 48 | 78 | 355 | 380 | 220 | 48 | 760 | 1037 | 16500 | 18,58 |
| M 52 | 78 | 355 | 380 | 220 | 52 | 760 | 1037 | 19800 | 18,46 |
| M 56 | 78 | 355 | 410 | 240 | 56 | 820 | 1097 | 23000 | 19,06 |



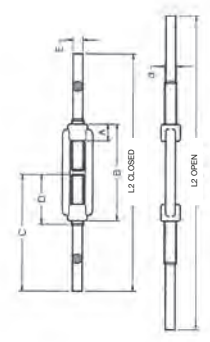


⚠ *

## A172

**BODY FOR TURNBUCKLE DIN 1480** - Steel Fe 430B

| Size mm | A mm | B mm | C mm | E mm | F mm | G mm | H mm | S.W.L. Kg | Weight Kg |
|---|---|---|---|---|---|---|---|---|---|
| M 6 | 12 | 86 | 110 | 6 | 12 | 9 | 19 | 225 | 0,06 |
| M 8 | 15 | 80 | 110 | 8 | 15 | 11 | 23 | 410 | 0,08 |
| M 10 | 18 | 89 | 125 | 9 | 18 | 14 | 30 | 650 | 0,15 |
| M 12 | 21 | 83 | 125 | 11 | 21 | 16 | 34 | 930 | 0,19 |
| M 14 | 24 | 97 | 140 | 12 | 24 | 18 | 38 | 1330 | 0,25 |
| M 16 | 27 | 116 | 170 | 14 | 27 | 20 | 42 | 1770 | 0,39 |
| M 18 | 27 | 116 | 170 | 14 | 27 | 20 | 42 | 2200 | 0,39 |
| M 20 | 34 | 132 | 200 | 17 | 34 | 24 | 52 | 2700 | 0,72 |
| M 22 | 36 | 148 | 220 | 19 | 37 | 26 | 56 | 3300 | 0,92 |
| M 24 | 39 | 177 | 255 | 20 | 39 | 28 | 60 | 3920 | 1,34 |
| M 27 | 45 | 165 | 255 | 23 | 45 | 34 | 74 | 4950 | 1,81 |
| M 30 | 45 | 165 | 255 | 23 | 45 | 34 | 74 | 6250 | 1,85 |
| M 33 | 45 | 165 | 255 | 23 | 45 | 34 | 74 | 7560 | 1,85 |
| M 36 | 55 | 185 | 295 | 28 | 55 | 40 | 86 | 9100 | 3,15 |
| M 39 | 63 | 204 | 330 | 32 | 63 | 50 | 104 | 10600 | 4,6 |
| M 42 | 63 | 204 | 330 | 32 | 63 | 50 | 104 | 12500 | 4,5 |
| M 45 | 78 | 199 | 355 | 40 | 80 | 65 | 135 | 14400 | 8,6 |
| M 48 | 78 | 199 | 355 | 40 | 80 | 65 | 135 | 16500 | 8,9 |
| M 52 | 78 | 199 | 355 | 40 | 80 | 65 | 135 | 19800 | 8,26 |
| M 56 | 78 | 199 | 355 | 40 | 80 | 65 | 135 | 23000 | 7,26 |



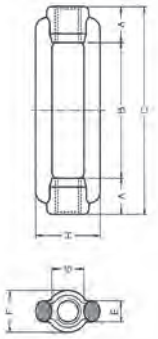

⚠ *

## A196

**TURNBUCKLE EYE AND EYE DIN 1478** - Steel Fe 430B

| Size mm | A mm | B mm | C mm | D mm | E mm | L1 mm | L2 mm | S.W.L. Kg | Weight Kg |
|---|---|---|---|---|---|---|---|---|---|
| M 6 | 110 | 80 | 55 | 9 | 4 | 152 | 240 | 225 | 0,12 |
| M 8 | 110 | 85 | 57 | 10 | 5 | 160 | 248 | 410 | 0,15 |
| M 10 | 125 | 105 | 68 | 14 | 6,5 | 196 | 290 | 650 | 0,29 |
| M 12 | 125 | 106 | 67 | 17 | 8 | 196 | 301 | 930 | 0,45 |
| M 16 | 170 | 160 | 97 | 23 | 13 | 294 | 435 | 1770 | 1,07 |
| M 20 | 200 | 190 | 116 | 25 | 14 | 352 | 520 | 2700 | 1,38 |
| M 24 | 255 | 210 | 125 | 34 | 17 | 391 | 600 | 3920 | 2,57 |
| M 30 | 255 | 240 | 150 | 38 | 19,5 | 441 | 648 | 6250 | 2,67 |
| M 36 | 295 | 276 | 160 | 48 | 27 | 498 | 730 | 9100 | 7,26 |
| M 48 | 355 | 322 | 180 | 55 | 40 | 564 | 840 | 16500 | 16,18 |



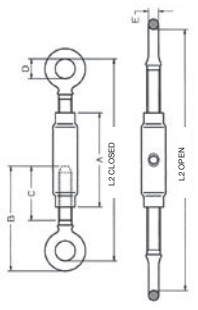


⚠ *

## A197

**TURNBUCKLE EYE AND HOOK DIN 1478** - Steel Fe 430B

| Size mm | A mm | B mm | C mm | D mm | E mm | F mm | G mm | L1 mm | L2 mm | S.W.L. Kg | Weight Kg |
|---|---|---|---|---|---|---|---|---|---|---|---|
| M 6 | 110 | 74 | 50 | 10 | 76 | 50 | 8,5 | 150 | 240 | 75 | 0,13 |
| M 8 | 110 | 80 | 52 | 11 | 89 | 52 | 10 | 161 | 250 | 165 | 0,15 |
| M 10 | 125 | 97 | 60 | 14 | 103 | 62 | 12 | 187 | 293 | 235 | 0,32 |
| M 12 | 125 | 106 | 67 | 17 | 121 | 65 | 16 | 208 | 313 | 320 | 0,49 |
| M 16 | 170 | 160 | 97 | 23 | 172 | 105 | 16,5 | 299 | 440 | 530 | 1,08 |
| M 20 | 200 | 190 | 116 | 25 | 185 | 110 | 17,5 | 341 | 509 | 730 | 1,44 |
| M 24 | 255 | 210 | 125 | 34 | 225 | 135 | 23 | 393 | 605 | 1550 | 2,65 |
| M 30 | 255 | 240 | 150 | 38 | 250 | 145 | 29 | 440 | 647 | 2240 | 3,87 |
| M 36 | 295 | 276 | 160 | 48 | 284 | 170 | 30 | 502 | 735 | 3530 | 7,54 |

⚠*



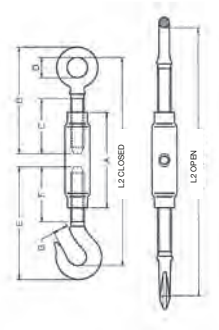


## A208

**TURNBUCKLE HOOK AND HOOK DIN 1478** - Steel Fe 430B

| Size mm | A mm | B mm | C mm | D mm | L1 mm | L2 mm | S.W.L. Kg | Weight Kg |
|---|---|---|---|---|---|---|---|---|
| M 6 | 110 | 76 | 50 | 8,5 | 150 | 240 | 75 | 0,14 |
| M 8 | 110 | 89 | 52 | 10 | 166 | 255 | 165 | 0,15 |
| M 10 | 125 | 103 | 62 | 12 | 189 | 297 | 235 | 0,35 |
| M 12 | 125 | 121 | 65 | 16 | 220 | 325 | 320 | 0,53 |
| M 16 | 170 | 172 | 105 | 16,5 | 304 | 445 | 530 | 1,09 |
| M 20 | 200 | 185 | 110 | 17,5 | 330 | 498 | 730 | 1,5 |
| M 24 | 255 | 225 | 135 | 23 | 396 | 610 | 1550 | 2,73 |
| M 30 | 255 | 250 | 145 | 29 | 440 | 647 | 2240 | 3,97 |
| M 36 | 295 | 284 | 170 | 30 | 506 | 740 | 3530 | 7,82 |

⚠*



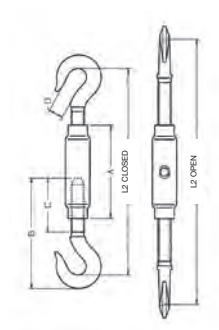


## A199

**TURNBUCKLE WITH STUBENDS DIN 1478** - Steel Fe 430B

| Size mm | A mm | B mm | C mm | D mm | L1 mm | L2 mm | S.W.L. Kg | Weight Kg |
|---|---|---|---|---|---|---|---|---|
| M 6 | 110 | 120 | 60 | 5,35 | 240 | 340 | 225 | 0,14 |
| M 8 | 110 | 120 | 65 | 7,05 | 240 | 340 | 410 | 0,17 |
| M 10 | 125 | 150 | 75 | 8,8 | 300 | 410 | 650 | 0,35 |
| M 12 | 125 | 150 | 75 | 10,7 | 300 | 410 | 930 | 0,51 |
| M 16 | 170 | 200 | 100 | 14,5 | 411 | 530 | 1770 | 1,09 |
| M 20 | 200 | 220 | 120 | 18 | 452 | 592 | 2700 | 1,6 |
| M 24 | 255 | 260 | 150 | 22 | 532 | 717 | 3920 | 2,75 |
| M 30 | 255 | 260 | 175 | 27,5 | 520 | 740 | 6250 | 4,17 |
| M 36 | 295 | 300 | 190 | 33,1 | 600 | 850 | 9100 | 7,18 |
| M 42 | 330 | 350 | 210 | 42 | 700 | 980 | 12500 | 11,15 |
| M 48 | 355 | 380 | 220 | 48 | 760 | 1060 | 16500 | 15,46 |

⚠*



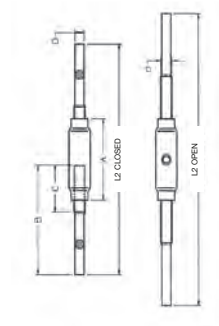


## A198

**TURNBUCKLE JAW AND JAW DIN 1478** - Steel Fe 430B

| Size mm | A mm | B mm | C mm | D mm | L1 mm | L2 mm | Bolt mm | S.W.L. Kg | Weight Kg |
|---|---|---|---|---|---|---|---|---|---|
| M 6 | 110 | 87 | 55 | 7 | 180 | 269 | M 5X25 | 230 | 0,15 |
| M 8 | 110 | 95 | 55 | 9 | 198 | 280 | M 6X31 | 300 | 0,26 |
| M 10 | 125 | 112 | 68 | 10 | 231 | 324 | M 8X36 | 470 | 0,45 |
| M 12 | 125 | 121 | 68 | 13 | 252 | 337 | M 10X45 | 690 | 0,66 |
| M 16 | 170 | 150 | 88 | 18 | 311 | 430 | M 12X58 | 1290 | 1,51 |
| M 20 | 200 | 182 | 105 | 20 | 374 | 516 | M 16X71 | 2130 | 2,93 |
| M 24 | 255 | 226 | 130 | 30 | 464 | 649 | M 22X97 | 3060 | 5 |
| M 30 | 255 | 252 | 140 | 36 | 504 | 711 | M 24x85 | 4860 | 9,97 |
| M 36 | 295 | 300 | 170 | 45 | 600 | 835 | M 30x115 | 6500 | 14,8 |

⚠*



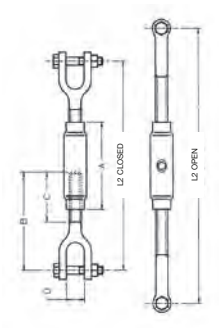

## A195

**BODY FOR TURNBUCKLE DIN 1478** - Steel Fe 430B

| Size<br>mm | A<br>mm | B<br>mm | C<br>mm | E<br>mm | F<br>mm | S.W.L.<br>Kg | Weight<br>Kg |
|---|---|---|---|---|---|---|---|
| M 6 | 110 | 17,2 | 7,5 | 9 | 6 | 225 | 0,1 |
| M 8 | 110 | 17,2 | 10 | 12 | 8 | 410 | 0,09 |
| M 10 | 125 | 21,3 | 12 | 15 | 8 | 650 | 0,19 |
| M 12 | 125 | 25 | 15 | 18 | 10 | 930 | 0,27 |
| M 16 | 170 | 30 | 20 | 24 | 10 | 1770 | 0,51 |
| M 20 | 200 | 33,7 | 24 | 30 | 12 | 2700 | 0,62 |
| M 24 | 255 | 42,4 | 29 | 33 | 12 | 3920 | 1,15 |
| M 30 | 255 | 51 | 36 | 41 | 16 | 6250 | 1,57 |
| M 36 | 295 | 63,5 | 43 | 50 | 16 | 9100 | 3,16 |
| M 42 | 330 | 70 | 51 | 60 | 20 | 12500 | 4,33 |
| M 48 | 355 | 82,5 | 58 | 72 | 20 | 16500 | 5,78 |



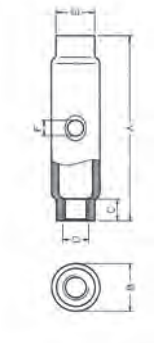

⚠ *

## A060

**EYE TIE-ROD UNI 6058** - Acciaio CL.4.6

| Size<br>mm | A<br>mm | B<br>mm | C<br>mm | D<br>mm | E<br>mm | L<br>mm | Weight<br>Kg |
|---|---|---|---|---|---|---|---|
| M 6 x 30 | 7 | 12 | 8,5 | 6 | 5 | 30 | 0,01 |
| M 6 x 40 | 7 | 12 | 8,5 | 6 | 5 | 40 | 0,01 |
| M 6 x 50 | 7 | 12 | 8,5 | 6 | 5 | 50 | 0,01 |
| M 8 x 40 | 9 | 16 | 11,1 | 8 | 6 | 40 | 0,02 |
| M 8 x 50 | 9 | 16 | 11,1 | 8 | 6 | 50 | 0,02 |
| M 8 x 60 | 9 | 16 | 11,1 | 8 | 6 | 60 | 0,02 |
| M 10 x 40 | 12 | 20 | 13,8 | 10 | 8 | 40 | 0,03 |
| M 10 x 50 | 12 | 20 | 13,8 | 10 | 8 | 50 | 0,04 |
| M 10 x 60 | 12 | 20 | 13,8 | 10 | 8 | 60 | 0,04 |
| M 10 x 70 | 12 | 20 | 13,8 | 10 | 8 | 70 | 0,05 |
| M 10 x 80 | 12 | 20 | 13,8 | 10 | 8 | 80 | 0,05 |
| M 12 x 50 | 14 | 24 | 16,4 | 12 | 10 | 50 | 0,06 |
| M 12 x 60 | 14 | 24 | 16,4 | 12 | 10 | 60 | 0,07 |
| M 12 x 70 | 14 | 24 | 16,4 | 12 | 10 | 70 | 0,08 |
| M 12 x 80 | 14 | 24 | 16,4 | 12 | 10 | 80 | 0,09 |
| M 12 x 90 | 14 | 24 | 16,4 | 12 | 10 | 90 | 0,1 |
| M 14 x 60 | 16 | 28 | 19 | 14 | 12 | 60 | 0,1 |
| M 14 x 70 | 16 | 28 | 19 | 14 | 12 | 70 | 0,11 |
| M 14 x 80 | 16 | 28 | 19 | 14 | 12 | 80 | 0,12 |
| M 14 x 90 | 16 | 28 | 19 | 14 | 12 | 90 | 0,13 |
| M 14 x 100 | 16 | 28 | 19 | 14 | 12 | 100 | 0,14 |
| M 14 x 120 | 16 | 28 | 19 | 14 | 12 | 120 | 0,16 |
| M 16 x 70 | 18 | 32 | 21 | 16 | 14 | 70 | 0,15 |
| M 16 x 80 | 18 | 32 | 21 | 16 | 14 | 80 | 0,17 |
| M 16 x 90 | 18 | 32 | 21 | 16 | 14 | 90 | 0,17 |
| M 16 x 100 | 18 | 32 | 21 | 16 | 14 | 100 | 0,2 |
| M 16 x 120 | 18 | 32 | 21 | 16 | 14 | 120 | 0,22 |
| M 16 x 140 | 18 | 32 | 21 | 16 | 14 | 140 | 0,24 |
| M 18 x 150 | 20 | 36 | 24,2 | 18 | 16 | 150 | 0,33 |
| M 20 x 80 | 22 | 40 | 26,2 | 20 | 18 | 80 | 0,28 |
| M 20 x 90 | 22 | 40 | 26,2 | 20 | 18 | 90 | 0,3 |
| M 20 x 100 | 22 | 40 | 26,2 | 20 | 18 | 100 | 0,32 |
| M 20 x 120 | 22 | 40 | 26,2 | 20 | 18 | 120 | 0,36 |
| M 20 x 140 | 22 | 40 | 26,2 | 20 | 18 | 140 | 0,4 |
| M 20 x 160 | 22 | 40 | 26,2 | 20 | 18 | 160 | 0,44 |
| M 22 x 180 | 24 | 44 | 28,2 | 22 | 18 | 180 | 0,6 |
| M 24 x 200 | 26 | 48 | 31,5 | 24 | 20 | 200 | 0,79 |
| M 27 x 220 | 30 | 54 | 34,5 | 27 | 22 | 220 | 1,14 |
| M 30 x 230 | 33 | 60 | 38,8 | 30 | 25 | 230 | 1,42 |



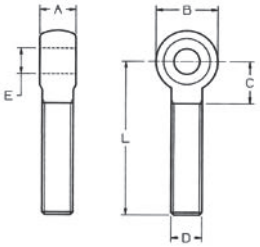


⚠ *

## A062

**WING-SCREW AMERICAN FORM UNI 5449-71** - Steel Fe 430B

| Size<br>mm | A<br>mm | B<br>mm | C<br>mm | E<br>mm | Weight<br>Kg |
|---|---|---|---|---|---|
| M 3 x 10 | 17,6 | 8,6 | 8 | 2,9 | 0,0026 |
| M 3 x 15 | 17,6 | 8,6 | 8 | 2,9 | 0,0028 |
| M 3 x 20 | 17,6 | 8,6 | 8 | 2,9 | 0,003 |
| M 3 x 25 | 17,6 | 8,6 | 8 | 2,9 | 0,0032 |
| M 3 x 30 | 17,6 | 8,6 | 8 | 2,9 | 0,0034 |
| M 4 x 10 | 17,6 | 8,6 | 8 | 2,9 | 0,003 |
| M 4 x 15 | 17,6 | 8,6 | 8 | 2,9 | 0,0032 |
| M 4 x 20 | 17,6 | 8,6 | 8 | 2,9 | 0,0036 |
| M 4 x 25 | 17,6 | 8,6 | 8 | 2,9 | 0,004 |
| M 4 x 30 | 17,6 | 8,6 | 8 | 2,9 | 0,0043 |
| M 5 x 10 | 22,5 | 11 | 10,3 | 4,1 | 0,0052 |
| M 5 x 15 | 22,5 | 11 | 10,3 | 4,1 | 0,0056 |
| M 5 x 20 | 22,5 | 11 | 10,3 | 4,1 | 0,006 |
| M 5 x 25 | 22,5 | 11 | 10,3 | 4,1 | 0,0067 |
| M 5 x 30 | 22,5 | 11 | 10,3 | 4,1 | 0,0074 |
| M 5 x 35 | 22,5 | 11 | 10,3 | 4,1 | 0,008 |
| M 6 x 10 | 27,8 | 13,6 | 12,7 | 5,1 | 0,0096 |
| M 6 x 15 | 27,8 | 13,6 | 12,7 | 5,1 | 0,0104 |
| M 6 x 20 | 27,8 | 13,6 | 12,7 | 5,1 | 0,011 |
| M 6 x 25 | 27,8 | 13,6 | 12,7 | 5,1 | 0,0116 |
| M 6 x 30 | 27,8 | 13,6 | 12,7 | 5,1 | 0,0123 |
| M 6 x 35 | 27,8 | 13,6 | 12,7 | 5,1 | 0,0132 |
| M 6 x 40 | 27,8 | 13,6 | 12,7 | 5,1 | 0,0141 |
| M 6 x 45 | 27,8 | 13,6 | 12,7 | 5,1 | 0,015 |
| M 6 x 50 | 27,8 | 13,6 | 12,7 | 5,1 | 0,0161 |
| M 8 x 15 | 30,3 | 14,8 | 13,8 | 5,6 | 0,0143 |
| M 8 x 20 | 30,3 | 14,8 | 13,8 | 5,6 | 0,016 |
| M 8 x 25 | 30,3 | 14,8 | 13,8 | 5,6 | 0,0177 |
| M 8 x 30 | 30,3 | 14,8 | 13,8 | 5,6 | 0,0195 |
| M 8 x 35 | 30,3 | 14,8 | 13,8 | 5,6 | 0,0207 |
| M 8 x 40 | 30,3 | 14,8 | 13,8 | 5,6 | 0,022 |
| M 8 x 45 | 30,3 | 14,8 | 13,8 | 5,6 | 0,0236 |
| M 8 x 50 | 30,3 | 14,8 | 13,8 | 5,6 | 0,025 |
| M 10 x 20 | 36,2 | 17,7 | 16,5 | 6,8 | 0,0282 |
| M 10 x 25 | 36,2 | 17,7 | 16,5 | 6,8 | 0,0297 |
| M 10 x 30 | 36,2 | 17,7 | 16,5 | 6,8 | 0,0322 |
| M 10 x 35 | 36,2 | 17,7 | 16,5 | 6,8 | 0,0342 |
| M 10 x 40 | 36,2 | 17,7 | 16,5 | 6,8 | 0,0358 |
| M 10 x 45 | 36,2 | 17,7 | 16,5 | 6,8 | 0,0377 |
| M 10 x 50 | 36,2 | 17,7 | 16,5 | 6,8 | 0,0402 |
| M 10 x 55 | 36,2 | 17,7 | 16,5 | 6,8 | 0,0434 |
| M 10 x 60 | 36,2 | 17,7 | 16,5 | 6,8 | 0,047 |
| M 12 x 25 | 49,4 | 24,1 | 22,5 | 9 | 0,0573 |
| M 12 x 30 | 49,4 | 24,1 | 22,5 | 9 | 0,0595 |
| M 12 x 35 | 49,4 | 24,1 | 22,5 | 9 | 0,0628 |
| M 12 x 40 | 49,4 | 24,1 | 22,5 | 9 | 0,067 |
| M 12 x 45 | 49,4 | 24,1 | 22,5 | 9 | 0,071 |
| M 12 x 50 | 49,4 | 24,1 | 22,5 | 9 | 0,0755 |
| M 12 x 55 | 49,4 | 24,1 | 22,5 | 9 | 0,0782 |
| M 12 x 60 | 49,4 | 24,1 | 22,5 | 9 | 0,0825 |



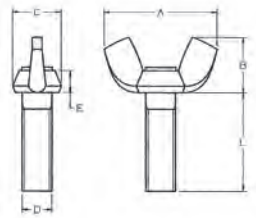


⚠ *

## A063

**WING-NUT AMERICAN FORM UNI 5448-71** - Steel Fe 430B

| Size<br>mm | A<br>mm | B<br>mm | C<br>mm | E<br>mm | Weight<br>Kg |
|---|---|---|---|---|---|
| M 3 | 17,6 | 8,6 | 8 | 2,9 | 0,0018 |
| M 4 | 17,6 | 8,6 | 8 | 2,9 | 0,0017 |
| M 5 | 22,5 | 11 | 10,3 | 4,1 | 0,003 |
| M 6 | 27,8 | 13,6 | 12,7 | 5,1 | 0,0057 |
| M 8 | 30,3 | 14,8 | 13,8 | 5,6 | 0,0075 |
| M 10 | 36,2 | 17,7 | 16,5 | 6,8 | 0,012 |
| M 12 | 49,4 | 24,1 | 22,5 | 9 | 0,0272 |
| M 14 | 58,3 | 28,5 | 26,6 | 10,7 | 0,062 |
| M 16 | 58,3 | 28,5 | 26,6 | 10,7 | 0,0595 |
| M 18 | 68,5 | 33,8 | 29,5 | 13,5 | 0,0767 |
| M 20 | 68,5 | 33,8 | 29,5 | 13,5 | 0,0762 |



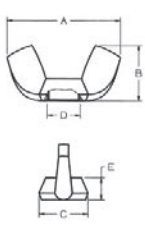


⚠ *

## A064

**QUICK LINK** - Steel Fe 360B

| Size<br>mm | A<br>mm | B<br>mm | C<br>mm | D<br>mm | ch."S"<br>mm | Weight<br>Kg |
|---|---|---|---|---|---|---|
| **3,5** | 10 | 30 | 3,5 | 4 | 7 | 0,01 |
| **4** | 12 | 33 | 4 | 5 | 8 | 0,01 |
| **5** | 13 | 40 | 5 | 6,5 | 9 | 0,02 |
| **6** | 15 | 46 | 6 | 9 | 11 | 0,03 |
| **7** | 16 | 52 | 7 | 9 | 12,5 | 0,06 |
| **8** | 17,5 | 58 | 8 | 9,5 | 14 | 0,07 |
| **9** | 19 | 62 | 9 | 10 | 15 | 0,11 |
| **10** | 20,5 | 69 | 10 | 13 | 17 | 0,15 |
| **12** | 23,5 | 80,5 | 12 | 14,5 | 19 | 0,23 |
| **14** | 27 | 97 | 14 | 16 | 22 | 0,35 |
| **16** | 29,5 | 113 | 16 | 21 | 24 | 0,45 |



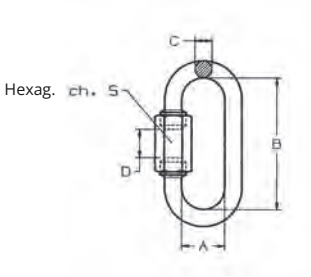


⚠ *

## A065

**LONG QUICK LINK** - Steel Fe 360B

| Size<br>mm | A<br>mm | D1<br>mm | D2<br>mm | L<br>mm | Weight<br>Kg |
|---|---|---|---|---|---|
| **4** | 11,5 | 4 | 11,5 | 45 | 0,015 |
| **5** | 13 | 5 | 13 | 52 | 0,025 |
| **6** | 14,5 | 6 | 14,5 | 58,5 | 0,042 |
| **7** | 16 | 7 | 16 | 65 | 0,06 |
| **8** | 17,5 | 8 | 17,5 | 72 | 0,09 |



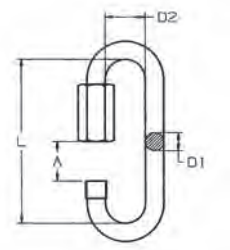


⚠ *

## A066

**TRIANGULAR QUICK LINK** - Steel Fe 360B

| Size<br>mm | A<br>mm | D1<br>mm | D2<br>mm | L<br>mm | Weight<br>Kg |
|---|---|---|---|---|---|
| **4** | 5,5 | 4 | 27,5 | 32 | 0,014 |
| **6** | 7,5 | 6 | 35 | 44 | 0,039 |
| **8** | 10 | 8 | 40 | 57 | 0,086 |
| **10** | 12 | 10 | 46 | 67 | 0,152 |
| **12** | 15 | 12 | 51 | 80 | 0,256 |



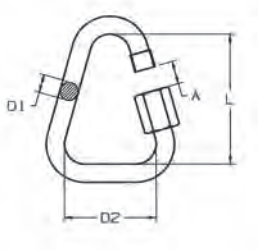


⚠ *

## A068

**SNAP HOOK** - Steel Fe 360B

| Size mm | A mm | B mm | C mm | D mm | L mm | S.W.L. Kg | Weight Kg |
|---|---|---|---|---|---|---|---|
| 4 x 40 | 7 | 14 | 6 | 4 | 40 | 20 | 0,007 |
| 5 x 50 | 8 | 15 | 7 | 5 | 50 | 30 | 0,015 |
| 6 x 60 | 9 | 17 | 8 | 6 | 60 | 40 | 0,02 |
| 7 x 70 | 10 | 19 | 8 | 7 | 70 | 60 | 0,04 |
| 8 x 80 | 12 | 23 | 10 | 8 | 80 | 75 | 0,06 |
| 9 x 90 | 12 | 24 | 10 | 9 | 90 | 100 | 0,09 |
| 10 x 100 | 15 | 29 | 11 | 10 | 100 | 120 | 0,11 |
| 11 x 120 | 18 | 36 | 16 | 11 | 120 | 140 | 0,19 |
| 12 x 140 | 20 | 40 | 19 | 12 | 140 | 140 | 0,2 |
| 13 x 160 | 22 | 54 | 23 | 13 | 160 | 200 | 0,36 |



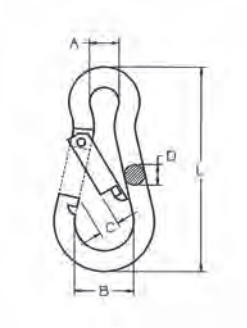


⚠ *

## A069

**SNAP HOOK WITH RING** - Steel Fe 360B

| Size mm | A mm | B mm | C mm | D mm | L mm | S.W.L. Kg | Weight Kg |
|---|---|---|---|---|---|---|---|
| 4 x 40 | 6 | 14 | 6,5 | 4,5 | 40 | 20 | 0,01 |
| 5 x 50 | 7 | 16 | 7 | 5 | 50 | 30 | 0,02 |
| 6 x 60 | 8 | 18 | 8 | 6 | 60 | 40 | 0,03 |
| 7 x 70 | 8 | 22 | 8 | 7 | 70 | 60 | 0,04 |
| 8 x 80 | 9,5 | 23 | 9 | 8 | 80 | 75 | 0,07 |
| 9 x 90 | 11,5 | 26 | 9 | 9 | 90 | 100 | 0,09 |
| 10 x 100 | 12,5 | 30 | 12 | 10 | 100 | 120 | 0,13 |
| 11 x 120 | 12,5 | 36 | 18 | 11 | 120 | 140 | 0,19 |
| 12 x 140 | 15 | 40 | 19 | 12 | 140 | 140 | 0,21 |
| 13 x 160 | 19 | 50 | 30 | 13 | 160 | 200 | 0,37 |



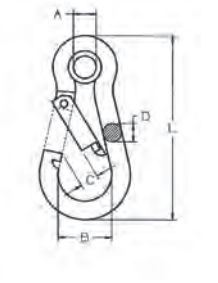


⚠ *

## A070

**SNAP HOOK WITH SAFETY SCREW** - Steel Fe 360B

| Size mm | A mm | B mm | C mm | D mm | L mm | S.W.L. Kg | Weight Kg |
|---|---|---|---|---|---|---|---|
| 60 x 6 | 7 | 6 | 6 | 10 | 60 | 40 | 0,028 |
| 70 x 7 | 8 | 7 | 7 | 11 | 70 | 60 | 0,043 |
| 80 x 8 | 9 | 8 | 8 | 13 | 80 | 75 | 0,066 |
| 90 x 9 | 10 | 9 | 8 | 13 | 90 | 100 | 0,092 |
| 100 x 10 | 11 | 10 | 10 | 16 | 100 | 120 | 0,129 |
| 120 x 11 | 12 | 11 | 15 | 19 | 120 | 140 | 0,186 |
| 140 x 12 | 14 | 12 | 17 | 20 | 140 | 140 | 0,256 |
| 160 x 13 | 16 | 13 | 25 | 22 | 160 | 200 | 0,354 |



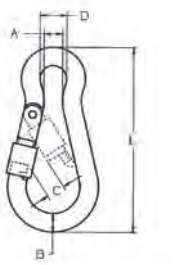


⚠ *

## A601

**COLOURED ALUMINIUM SNAP HOOK** - Aluminium

Available colors:
Red / Green / Blue / Gold / Black

| Size<br>mm | A<br>mm | B<br>mm | C<br>mm | D<br>mm | L<br>mm | Weight<br>Kg |
|---|---|---|---|---|---|---|
| **5x50** | 7,5 | 25 | 11 | 4,4 | 50 | 0,004 |
| **6x60** | 10 | 30 | 12 | 5,2 | 61 | 0,008 |
| **7x70** | 12 | 35 | 15 | 6,2 | 70 | 0,013 |
| **8x80** | 12,5 | 38 | 17 | 7,2 | 80 | 0,019 |
| **10x100** | 15 | 63 | 23 | 8,6 | 100 | 0,046 |



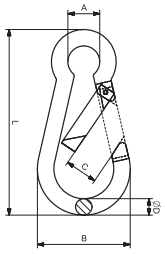


⚠*

## A602

**COLOURED ALUMINIUM SNAP HOOK WITH RING** - Aluminium

Available colors:
Red / Green / Blue / Gold / Black

| Size<br>mm | A<br>mm | B<br>mm | C<br>mm | D<br>mm | L<br>mm | D1<br>mm | A1<br>mm | Weight<br>Kg |
|---|---|---|---|---|---|---|---|---|
| **5x50** | 7,5 | 25 | 11 | 4,4 | 50 | 1,5 | 25 | 0,006 |
| **6x60** | 10 | 30 | 12 | 5,2 | 61 | 1,5 | 25 | 0,009 |
| **7x70** | 12 | 35 | 15 | 6,2 | 70 | 1,5 | 25 | 0,014 |
| **8x80** | 12,5 | 38 | 17 | 7,2 | 80 | 1,5 | 25 | 0,021 |
| **10x100** | 15 | 63 | 23 | 8,6 | 100 | 1,5 | 25 | 0,05 |



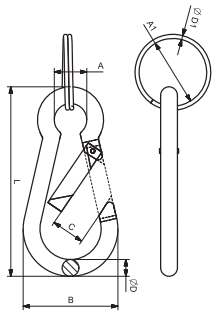


⚠*

## A603

**COLOURED ALUMINIUM SNAP HOOK WITH SAFETY** - Aluminium

Available colors:
Red / Green / Blue / Gold / Black

| Size<br>mm | B<br>mm | C<br>mm | D<br>mm | L<br>mm | Weight<br>Kg |
|---|---|---|---|---|---|
| **5x50** | 26 | 13 | 4,4 | 48 | 0,005 |
| **6x60** | 30 | 14 | 5,2 | 58 | 0,008 |
| **7x70** | 35 | 17 | 6,2 | 67 | 0,015 |
| **8x80** | 42 | 19 | 7,2 | 77 | 0,025 |
| **10x100** | 55 | 25 | 8,6 | 99 | 0,034 |



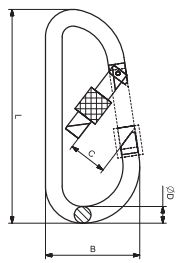


⚠*

## A604

**COLOURED FLAT ALUMINIUM SNAP HOOK WITH SAFETY** - Aluminium

Available colors:
Red / Green / Blue / Gold / Black

| Size | B | C | D | L | Weight |
|---|---|---|---|---|---|
| mm | mm | mm | mm | mm | Kg |
| 5x50 | 26,5 | 13 | 4,4 | 49 | 0,006 |
| 6x60 | 31 | 14 | 5,2 | 59 | 0,009 |
| 7x70 | 37 | 17 | 6,2 | 68 | 0,016 |
| 8x80 | 43 | 19 | 7,2 | 78 | 0,027 |
| 10x100 | 58 | 25 | 8,6 | 101 | 0,049 |



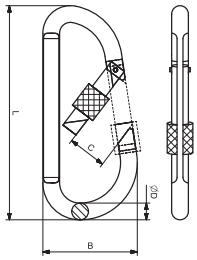


⚠*

## A071

**SNAP HOOK** - Casting steel

| Size mm | D mm | L mm | F mm | Weight Kg |
|---|---|---|---|---|
| 24 | 26 | 72 | 8 | 0,039 |
| 24 | 26 | 78 | 8 | 0,046 |



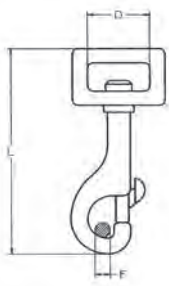


⚠*

## A072

**SNAP HOOK** - Casting steel

| Size mm | D mm | L mm | F mm | Weight Kg |
|---|---|---|---|---|
| 17 | 17 | 70 | 8 | 0,028 |
| 20 | 20 | 74 | 8 | 0,032 |
| 20 | 20 | 80 | 8 | 0,039 |
| 22 | 22 | 74 | 8 | 0,036 |
| 22 | 22 | 80 | 8 | 0,043 |



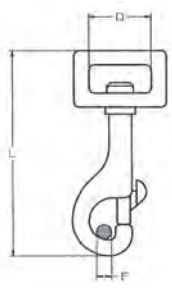


⚠*

## A073

**SNAP HOOK WITH ROUND EYE** - Casting steel

| Size<br>mm | D<br>mm | L<br>mm | F<br>mm | Weight<br>Kg |
|---|---|---|---|---|
| 13 | 13 | 73 | 8 | 0,028 |
| 13 | 13 | 79 | 8 | 0,035 |
| 16 | 16 | 78 | 8 | 0,03 |
| 16 | 16 | 84 | 8 | 0,037 |
| 20 | 20 | 82 | 8 | 0,032 |
| 20 | 20 | 88 | 8 | 0,039 |
| 22 | 22 | 84 | 8 | 0,036 |
| 22 | 22 | 90 | 8 | 0,043 |
| 25 | 25 | 87 | 8 | 0,042 |
| 25 | 25 | 93 | 8 | 0,049 |



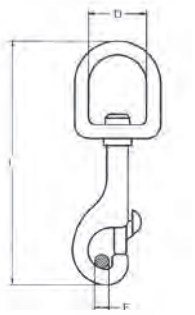


⚠ *

## A074

**SIMPLEX HOOK** - Steel

| Size<br>mm | F<br>mm | D1<br>mm | D1<br>mm | L<br>mm | Weight<br>Kg |
|---|---|---|---|---|---|
| 25 | 3 | 6 | 8 | 25/50 | 0,005 |
| 30 | 4,5 | 6 | 8 | 30/50 | 0,005 |
| 40 | 5,5 | 7 | 10 | 40/67 | 0,009 |
| 50 | 6,5 | 9 | 11 | 50/83 | 0,014 |
| 60 | 7,5 | 10 | 13 | 60/97 | 0,023 |
| 70 | 9 | 11 | 17 | 70/115 | 0,031 |
| 80 | 10 | 12 | 17 | 80/123 | 0,05 |
| 90 | 11 | 14 | 18 | 90/105 | 0,08 |
| 100 | 11 | 14 | 19 | 100/146 | 0,086 |
| 120 | 11 | 16 | 22 | 120/170 | 0,083 |



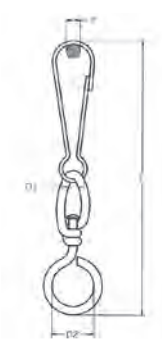


⚠ *

## A095

**SWIVEL** - Cast iron

| Size<br>mm | D1<br>mm | D2<br>mm | L<br>mm |
|---|---|---|---|
| 13 x 13 | 13 | 13 | 50 |
| 16 x 16 | 16 | 16 | 60 |
| 20 x 20 | 20 | 20 | 65 |
| 22 x 22 | 22 | 22 | 70 |
| 25 x 25 | 25 | 25 | 78 |



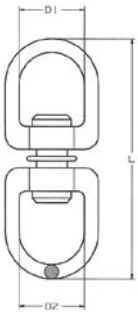


⚠ *

## A076K

**SNAP HOOK WITH SAFETY SCREW** - Aluminium 7075

| Size<br>mm | A<br>mm | B<br>mm | C<br>mm | D<br>mm | L<br>mm | Breaking Load | Weight<br>Kg |
|---|---|---|---|---|---|---|---|
| **100** | 13 | 10 | 17 | 10 | 100 | 17 kN | 0,05 |
| **120** | 18 | 15 | 23 | 11 | 125 | 22 kN | 0,08 |



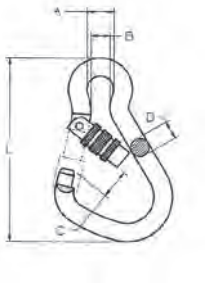


⚠*

## A079K

**SNAP HOOK** - Steel

| Size<br>mm | A<br>mm | B<br>mm | C<br>mm | D<br>mm | L<br>mm | Breaking Load | Weight<br>Kg |
|---|---|---|---|---|---|---|---|
| **50** | 7,5 | 5 | 9 | 5 | 52 | SWL 150 Kg | 0,02 |
| **60** | 8 | 5,5 | 12 | 6 | 65 | SWL 150 Kg | 0,03 |
| **80** | 12 | 9 | 18 | 8 | 85 | 9 kN | 0,07 |
| **100** | 13 | 10 | 19 | 10 | 100 | 17 kN | 0,14 |
| **120** | 18 | 15 | 26 | 11 | 125 | 22 kN | 0,2 |



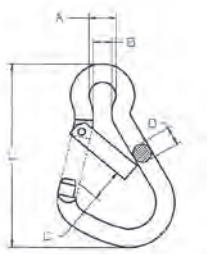


⚠*

## A080K

**SNAP HOOK** - Steel

| Size<br>mm | A<br>mm | B<br>mm | C<br>mm | D<br>mm | L<br>mm | Breaking Load<br>kN | Weight<br>Kg |
|---|---|---|---|---|---|---|---|
| **80** | 12 | 9 | 17 | 8 | 85 | 9 | 0,079 |
| **100** | 13 | 10 | 17 | 10 | 100 | 17 | 0,149 |
| **120** | 18 | 15 | 23 | 11 | 125 | 22 | 0,217 |






⚠*

## A082K

**SNAP HOOK WITH RING** - Steel

| Size<br>mm | A<br>mm | C<br>mm | D<br>mm | L<br>mm | Breaking Load<br>kN | Weight<br>Kg |
|---|---|---|---|---|---|---|
| **80** | 10 | 17 | 8 | 85 | 9 | 0,08 |
| **100** | 11,5 | 17 | 10 | 100 | 17 | 0,15 |
| **120** | 15 | 23 | 11 | 125 | 22 | 0,22 |



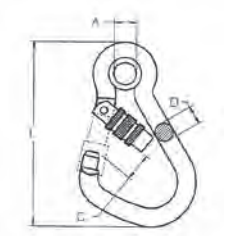


⚠ *

## A089

**SWIVEL SNAP HOOK** - Steel brass coated

| Size (D)<br>mm | A<br>mm | B<br>mm | C<br>mm | Weight<br>Kg |
|---|---|---|---|---|
| **11** | 11 | 74 | 6,5 | 0,028 |
| **19** | 25 | 90 | 12 | 0,068 |
| **22,5** | 29 | 113 | 14 | 0,073 |



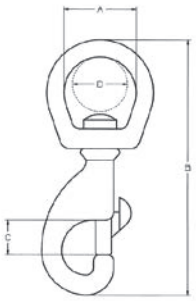


⚠ *

## A090

**SNAP HOOK** - Steel brass coated

| Size (D)<br>mm | A<br>mm | B<br>mm | C<br>mm | Weight<br>Kg |
|---|---|---|---|---|
| **15** | 18,5 | 83 | 9,5 | 0,06 |



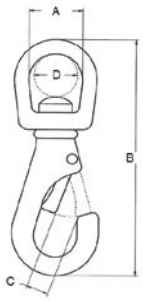


⚠ *

## A091

**SNAP HOOK** - Steel brass coated

| Size (D) mm | A mm | B mm | C mm | E mm | Weight Kg |
|---|---|---|---|---|---|
| 13 | 16,5 | 84,5 | 9 | 6 | 0,050 |



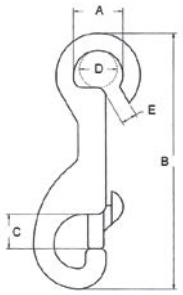


⚠*

## A092

**SNAP HOOK** - Steel brass coated

| Size (D) mm | A mm | B mm | C mm | C1 mm | Weight Kg |
|---|---|---|---|---|---|
| 11,5 | 13 | 66 | 11 | 11,5 | 0,030 |



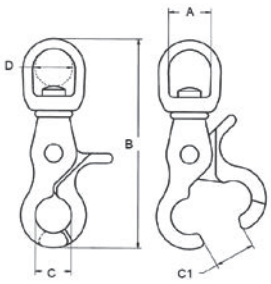


⚠*

## A149

**REGULAR SWIVEL** - Steel Fe 430B

| Size mm | A mm | B mm | C mm | D mm | L mm | Weight Kg |
|---|---|---|---|---|---|---|
| 6 | 19 | 17,5 | 27 | 31,7 | 74,6 | 0,08 |
| 8 | 25,4 | 20,6 | 31,7 | 41,3 | 90,5 | 0,16 |
| 10 | 31,7 | 23,8 | 38,1 | 51 | 109,5 | 0,31 |
| 12 | 38,1 | 33,3 | 51 | 63,5 | 138 | 0,61 |
| 16 | 44,5 | 39,6 | 60,7 | 76,2 | 166,7 | 1,06 |
| 20 | 51 | 44,5 | 66,7 | 88,9 | 182,6 | 1,65 |
| 22 | 53 | 52 | 74,5 | 102 | 222 | 2,85 |



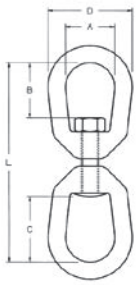


⚠*

## A150

**CHAIN SWIVEL** - Steel Fe 430B

| Size<br>mm | A<br>mm | B<br>mm | C<br>mm | D<br>mm | E<br>mm | G<br>mm | Weight<br>Kg |
|---|---|---|---|---|---|---|---|
| **6** | 15,8 | 17,5 | 19 | 31,8 | 28,5 | 6,4 | 0,06 |
| **8** | 19 | 20,6 | 25,4 | 38,9 | 35 | 7,9 | 0,12 |
| **10** | 25,4 | 23,9 | 31,8 | 50,8 | 44,5 | 9,7 | 0,23 |
| **12** | 31,8 | 33,3 | 38,1 | 63,5 | 57,2 | 12,7 | 0,46 |
| **16** | 38,1 | 39,6 | 44,5 | 76,2 | 69,9 | 15,8 | 0,79 |
| **20** | 44,5 | 44,4 | 50,8 | 88,9 | 82,6 | 19 | 1,31 |



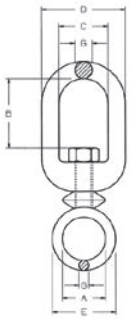


⚠ *

## S096

**THIMBLE DIN 6899A** - Steel Fe 360B

| Size ø<br>mm | A<br>mm | B<br>mm | C<br>mm | S<br>mm | Weight<br>Kg |
|---|---|---|---|---|---|
| **1,8** | 6/8 | 16/17,5 | 2 | 0,5 | 0,0009 |
| **2,5** | 10 | 21,5 | 3 | 0,5 | 0,0015 |
| **3,5** | 12 | 26,5 | 4 | 0,75 | 0,0035 |
| **4** | 13 | 28,5 | 5 | 0,75 | 0,0043 |
| **5** | 14 | 30 | 6 | 1 | 0,0058 |
| **6** | 15 | 33 | 7 | 1 | 0,0079 |
| **7** | 16 | 35 | 8 | 1,25 | 0,0101 |
| **8** | 18 | 39 | 9 | 1,25 | 0,016 |
| **9** | 20 | 43 | 10 | 1,25 | 0,0198 |
| **10** | 22 | 47,5 | 11 | 1,5 | 0,0295 |
| **11** | 24 | 51,5 | 12 | 1,5 | 0,037 |
| **13** | 28 | 61 | 14 | 1,8 | 0,072 |
| **15** | 32 | 68,5 | 16 | 2 | 0,083 |
| **16** | 35 | 78 | 18 | 2,5 | 0,18 |
| **18** | 40 | 86,5 | 20 | 2,5 | 0,27 |
| **20** | 44 | 95 | 22 | 2,5 | 0,35 |
| **24/26** | 48 | 103 | 26 | 4 | 0,46 |



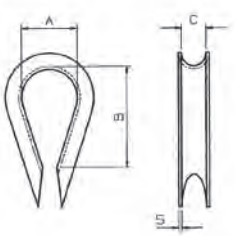


⚠ *

## A213

**EXTRA HEAVY THIMBLE** - Steel Fe 360B

| Size ø<br>inch | A<br>mm | B<br>mm | C<br>mm | Weight<br>Kg |
|---|---|---|---|---|
| **1/4** | 22 | 41 | 7,2 | 0,03 |
| **5/16** | 27 | 48 | 8,6 | 0,05 |
| **3/8** | 29 | 54 | 10,5 | 0,1 |
| **7/16** | 32 | 60 | 12 | 0,14 |
| **1/2 - 9/16** | 38 | 65 | 15 | 0,23 |
| **5/8** | 44 | 83 | 16,8 | 0,34 |
| **3/4** | 51 | 95 | 20 | 0,67 |
| **7/8** | 57 | 108 | 24 | 0,79 |
| **1** | 63 | 114 | 27 | 1,25 |
| **1 1/8 - 1 1/4** | 73 | 130 | 33,2 | 1,81 |
| **1 1/4 - 1 3/8** | 89 | 165 | 36,5 | 3,67 |
| **1 3/8 - 1 1/2** | 89 | 159 | 39,6 | 5,33 |
| **1 5/8** | 102 | 203 | 43,7 | 7,71 |
| **1 3/4** | 114 | 229 | 46,7 | 8,05 |
| **1 7/8 - 2** | 152 | 305 | 53,2 | 11,34 |
| **2 1/4** | 178 | 356 | 60,45 | 17,92 |



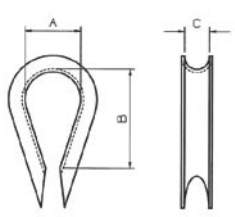


⚠ *

## A097

**THIMBLE DIN 6899B** - Steel Fe 360B

| Size ø mm | A mm | B mm | C mm | S mm | D mm | Weight Kg |
|---|---|---|---|---|---|---|
| **2,5** | 12 | 19 | 3 | 1,6 | 1,25 | 0,005 |
| **3,5** | 13 | 21 | 4 | 1,6 | 1,25 | 0,008 |
| **4** | 14 | 23 | 5 | 1,9 | 0,75 | 0,01 |
| **5** | 16 | 25 | 6 | 2,4 | 0,75 | 0,016 |
| **6** | 18 | 28 | 7 | 2,4 | 0,75 | 0,019 |
| **7** | 20 | 32 | 8 | 2,8 | 1 | 0,03 |
| **Hot dip galvanized** | | | | | | |
| **9** | 24 | 38 | 10 | 3,1 | 1,25 | 0,047 |
| **11** | 28 | 45 | 12 | 3,3 | 1,5 | 0,068 |
| **13** | 30 | 48 | 13 | 3,3 | 1,5 | 0,08 |
| **13** | 32 | 51 | 14 | 3,7 | 1,75 | 0,1 |
| **15** | 36 | 58 | 16 | 3,8 | 2 | 0,14 |
| **16** | 38 | 61 | 17 | 4,7 | 2 | 0,18 |
| **17** | 40 | 64 | 18 | 4,7 | 2 | 0,2 |
| **18** | 45 | 72 | 20 | 5,7 | 2,25 | 0,29 |
| **20** | 50 | 80 | 22 | 5,7 | 2,5 | 0,32 |
| **22** | 56 | 90 | 24 | 6,5 | 3 | 0,47 |
| **24** | 62 | 99 | 26 | 6,8 | 3,5 | 0,59 |
| **26** | 70 | 112 | 28 | 8 | 3,5 | 0,8 |
| **28** | 75 | 120 | 30 | 8 | 3,5 | 1,1 |
| **30** | 80 | 128 | 32 | 8 | 3,5 | 1,23 |
| **32** | 95 | 152 | 34 | 8,5 | 3,5 | 1,56 |
| **34** | 100 | 160 | 36 | 8,5 | 3,5 | 1,76 |
| **36** | 110 | 176 | 38 | 8,5 | 3,5 | 1,92 |
| **38** | 115 | 184 | 40 | 10,5 | 4 | 2,92 |
| **40** | 120 | 192 | 42 | 10,5 | 4 | 3,2 |
| **42** | 150 | 240 | 45 | 10,5 | 6,5 | 3,64 |
| **46** | 120 | 220 | 48 | 6 | 6 | 5,75 |
| **48** | 120 | 240 | 50 | 8 | 7 | 6,2 |
| **52** | 145 | 275 | 54 | 10 | 8 | 6,9 |
| **56** | 145 | 305 | 58 | 10 | 9 | 8,5 |

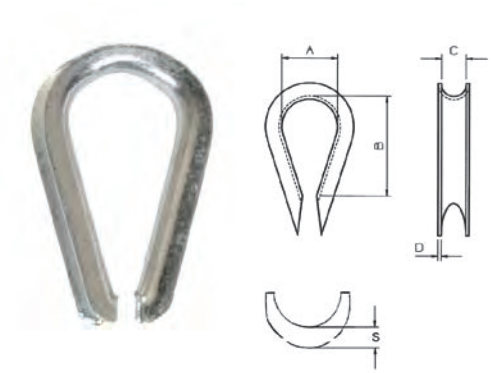


⚠*

## A097VN

**BLACK THIMBLE DIN 6899B** - Steel Fe 360B

| Size ø mm | A mm | B mm | C mm | S mm | D mm | Weight Kg |
|---|---|---|---|---|---|---|
| **3,5** | 13 | 21 | 4 | 1,6 | 1,25 | 0,008 |
| **4** | 14 | 23 | 5 | 1,9 | 0,75 | 0,01 |
| **5** | 16 | 25 | 6 | 2,4 | 0,75 | 0,016 |
| **6** | 18 | 28 | 7 | 2,4 | 0,75 | 0,019 |
| **7** | 20 | 32 | 8 | 2,8 | 1 | 0,03 |
| **9** | 24 | 38 | 10 | 3,1 | 1,25 | 0,047 |

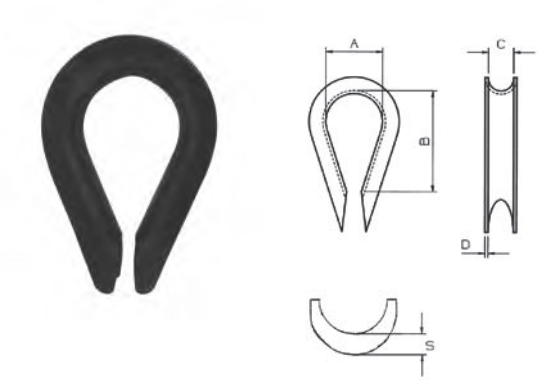


⚠*

## A176

**LIFTING EYE HOOK DIN 689 WITH LATCH** - Steel C 15

| S.W.L. t | A mm | B mm | C mm | D mm | E mm | G mm | H mm | I mm | L mm | Weight Kg |
|---|---|---|---|---|---|---|---|---|---|---|
| **0,25** | 12 | 7,5 | 19,5 | 23 | 53,5 | 15 | 64 | 13 | 88,5 | 0,15 |
| **0,5** | 16 | 10 | 26 | 31 | 71,5 | 22 | 85 | 17 | 117,5 | 0,33 |
| **1** | 20 | 13,5 | 36 | 42 | 98 | 25 | 116 | 23,5 | 160,5 | 0,83 |
| **1,6** | 26 | 16 | 42,5 | 50 | 116 | 31 | 138 | 28 | 190,5 | 1,3 |
| **2,5** | 32 | 20 | 53,5 | 62 | 145 | 39 | 174 | 35 | 240 | 2,5 |
| **4** | 40 | 25 | 67,5 | 79 | 183,5 | 53 | 219 | 44,5 | 302 | 5,3 |
| **5** | 46 | 28 | 75 | 88 | 204,5 | 69 | 236 | 49,5 | 329 | 8 |



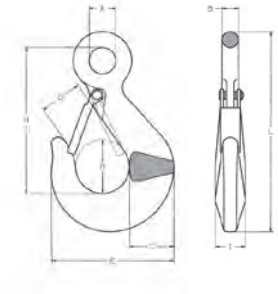

## A204S

**CARBON STEEL EYE HOOK WITH LATCH** - Carbon steel

| S.W.L. t | A mm | B mm | D mm | E mm | G mm | H mm | I mm | L mm | Weight Kg |
|---|---|---|---|---|---|---|---|---|---|
| **0,8** | 19 | 10 | 30 | 73 | 17 | 85 | 17 | 114 | 0,26 |
| **1** | 23 | 12 | 32 | 82 | 17 | 93 | 20 | 126 | 0,35 |
| **1,6** | 30 | 13 | 35 | 91 | 19 | 103 | 21 | 142 | 0,62 |
| **2** | 31 | 17 | 38 | 105 | 22 | 119 | 26 | 165 | 0,93 |
| **3,2** | 39 | 19 | 50 | 125 | 27 | 147 | 32 | 204 | 1,73 |
| **5** | 51 | 24 | 60 | 168 | 45 | 185 | 37 | 255 | 3,42 |
| **7,5** | 62 | 28,5 | 74 | 198 | 49 | 230 | 43 | 316 | 5,37 |
| **10** | 71 | 31 | 80 | 221 | 55 | 259 | 55 | 357 | 7,76 |
| **15** | 90 | 40 | 107 | 260 | 76 | 319 | 70 | 434 | 14,32 |
| **20** | 89 | 44 | 127 | 346 | 92 | 357 | 76 | 494 | 23,87 |
| **25** | 114 | 51 | 137 | 357 | 96 | 465 | 85 | 628 | 63,92 |



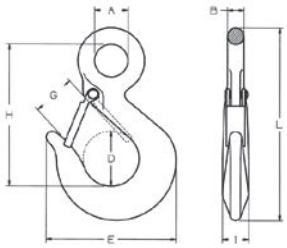

## A111N

**CARBON STEEL SHANK HOOK WITH LATCH** - Carbon steel

| S.W.L. t | A mm | B mm | C mm | D mm | E mm | F mm | G mm | H mm | Weight Kg |
|---|---|---|---|---|---|---|---|---|---|
| **0,8** | 73 | 17 | 31 | M12 | 21 | 17 | 58 | 108 | 0,22 |
| **1** | 81 | 17 | 35 | M16 | 24 | 19 | 65 | 122 | 0,35 |
| **1,6** | 91 | 21 | 42 | M20 | 29,5 | 22 | 70 | 138 | 0,52 |
| **2** | 104 | 23 | 42 | M20 | 34 | 23 | 79 | 150 | 0,8 |
| **3,2** | 125 | 25 | 50 | M22 | 42 | 31 | 95 | 182 | 1,45 |
| **5** | 166 | 50 | 63 | M27 | 52 | 38 | 121 | 230 | 2,9 |
| **7,5** | 212 | 55 | 77 | M36 | 68 | 45 | 140 | 277 | 6,3 |
| **10** | 220 | 60 | 80 | M39 | 76 | 57 | 167 | 314 | 10,8 |
| **15** | 280 | 60 | 114 | M52 | 96 | 64 | 201,5 | 400 | 15 |



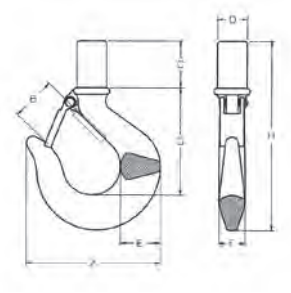

## A205S

**CARBON STEEL REVOLVING HOOK WITH LATCH** - Carbon steel

| S.W.L. t | A mm | B mm | C mm | D mm | E mm | F mm | G mm | H mm | I mm | L mm | L1 mm | d | Weight Kg |
|---|---|---|---|---|---|---|---|---|---|---|---|---|---|
| **0,8** | 31 | 10,5 | 24 | 64 | 25 | 73 | 17 | 17 | 77 | 142 | 112 | M 12 | 0,45 |
| **1** | 39 | 13 | 33 | 81 | 34 | 81 | 17 | 19 | 87 | 170 | 135 | M 16 | 0,77 |
| **1,6** | 44 | 16,5 | 40 | 99 | 38 | 91 | 21 | 22 | 96 | 200 | 158 | M 20 | 1,22 |
| **2** | 44 | 16,5 | 40 | 99 | 38 | 104 | 23 | 23 | 108 | 210 | 165 | M 20 | 1,51 |
| **3,2** | 51 | 19,5 | 40 | 112,5 | 46 | 125 | 25 | 31 | 133 | 250 | 194 | M 22 | 2,48 |
| **5** | 66 | 26 | 60 | 150 | 62 | 166 | 50 | 38 | 167 | 320 | 248 | M 27 | 6,06 |
| **7,5** | 80 | 31 | 65 | 175 | 75 | 212 | 55 | 45 | 205 | 385 | 294 | M 36 | 9,94 |
| **10** | 80 | 31 | 65 | 175 | 75 | 220 | 60 | 57 | 235 | 400 | 302 | M 39 | 15 |
| **15** | 120 | 40 | 115 | 262 | 124 | 280 | 60 | 64 | 286 | 550 | 425 | M 52 | 20,64 |
| **20** | 135 | 45 | 118 | 293 | 124 | 350 | 102 | 75 | 377 | 673 | 533 | M 60 | 28,79 |



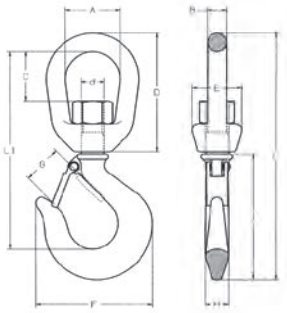

## A206S

**ALLOY STEEL EYE HOOK WITH LATCH** - High tensile steel

| S.W.L. t | A mm | B mm | D mm | E mm | G mm | H mm | I mm | L mm | Weight Kg |
|---|---|---|---|---|---|---|---|---|---|
| **1,25** | 19 | 10 | 30 | 73 | 17 | 85 | 17 | 114 | 0,21 |
| **1,6** | 23 | 12 | 32 | 82 | 17 | 93 | 20 | 126 | 0,31 |
| **2,5** | 30 | 13 | 35 | 91 | 19 | 103 | 21 | 142 | 0,62 |
| **3,2** | 31 | 17 | 38 | 105 | 22 | 119 | 26 | 165 | 0,96 |
| **5,4** | 39 | 19 | 50 | 125 | 27 | 147 | 32 | 204 | 1,65 |
| **8** | 51 | 24 | 60 | 168 | 45 | 185 | 37 | 255 | 3,13 |
| **11,5** | 62 | 28,5 | 74 | 198 | 49 | 230 | 43 | 316 | 5,37 |
| **16** | 72 | 32 | 82,5 | 221 | 57 | 256 | 49 | 354 | 7,76 |
| **22** | 89 | 40 | 108 | 260 | 76 | 318 | 60 | 434 | 14,32 |
| **30** | 89 | 44 | 127 | 346 | 92 | 357 | 76 | 494 | 23,87 |
| **37** | 114 | 51 | 137 | 357 | 96 | 465 | 85 | 628 | 63,92 |



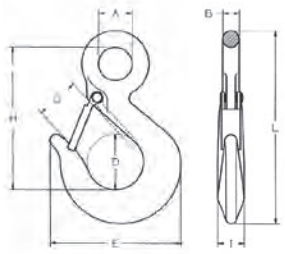

## A207S

**ALLOY STEEL REVOLVING HOOK WITH LATCH** - High tensile steel

| S.W.L. t | A mm | B mm | C mm | D mm | E mm | F mm | G mm | H mm | I mm | L mm | L1 mm | d | Weight Kg |
|---|---|---|---|---|---|---|---|---|---|---|---|---|---|
| **1,25** | 31 | 10,5 | 24 | 64 | 25 | 73 | 17 | 17 | 77 | 142 | 112 | M 12 | 0,45 |
| **1,6** | 39 | 13 | 33 | 81 | 34 | 81 | 17 | 19 | 87 | 170 | 135 | M 16 | 0,77 |
| **2,5** | 44 | 16,5 | 42 | 99 | 38 | 91 | 21 | 22 | 96 | 200 | 158 | M 20 | 1,22 |
| **3,2** | 44 | 16,5 | 40 | 99 | 38 | 104 | 23 | 23 | 108 | 210 | 165 | M 20 | 1,51 |
| **5,4** | 51 | 19,5 | 40 | 112,5 | 46 | 125 | 25 | 31 | 133 | 250 | 194 | M 22 | 2,48 |
| **8** | 66 | 26 | 60 | 150 | 62 | 166 | 50 | 38 | 167 | 320 | 248 | M 27 | 6,06 |
| **11,5** | 80 | 31 | 65 | 175 | 75 | 212 | 55 | 45 | 205 | 385 | 294 | M 36 | 9,94 |
| **16** | 90 | 32 | 73 | 183 | 76 | 225 | 67 | 52 | 234 | 420 | 322 | M 36 | 15 |
| **20** | 120 | 40 | 105 | 257 | 105 | 285 | 81 | 64 | 288 | 548 | 424 | M 52 | 20,64 |
| **30** | 135 | 45 | 118 | 293 | 124 | 350 | 102 | 75 | 377 | 673 | 533 | M 60 | 28,79 |



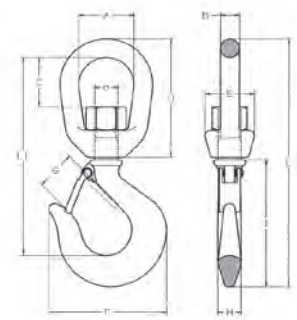

## A123

**ALLOY STEEL SHANK HOOK WITH LATCH** - High tensile steel

| S.W.L. t | A mm | B mm | C mm | D mm | E mm | F mm | G mm | H mm | Weight Kg |
|---|---|---|---|---|---|---|---|---|---|
| **1,25** | 73 | 17 | 31 | M12 | 21 | 17 | 58 | 108 | 0,22 |
| **1,6** | 81 | 17 | 35 | M16 | 24 | 19 | 65 | 122 | 0,35 |
| **2,5** | 91 | 21 | 42 | M20 | 29,5 | 22 | 70,5 | 138 | 0,52 |
| **3,2** | 104 | 23 | 42 | M20 | 34 | 23 | 79 | 150 | 0,8 |
| **5,4** | 125 | 25 | 50 | M22 | 42 | 31 | 95 | 182 | 1,45 |
| **8** | 166 | 50 | 63 | M27 | 52 | 38 | 121 | 230 | 2,9 |
| **11,5** | 212 | 55 | 77 | M36 | 68 | 45 | 152 | 277 | 6,3 |
| **16** | 225 | 67 | 90 | M36 | 74 | 52 | 169 | 325 | 10,8 |
| **20** | 285 | 81 | 112 | M52 | 93 | 64 | 204 | 400 | 15 |

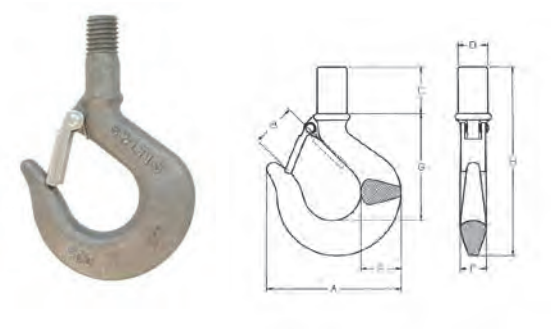

## A129

**H.Q. WIRE-TIE FOR AGRICULTURE** - Body: Steel Fe 360 B - Pin: Cast iron

| Size | A mm | B mm | E mm | L mm | Weight Kg |
|---|---|---|---|---|---|
| **1** | 26 | 6 | 5,5 | 80 | 0,08 |
| **2** | 26 | 6 | 5,5 | 92 | 0,09 |
| **3** | 26 | 6 | 5,5 | 104 | 0,1 |

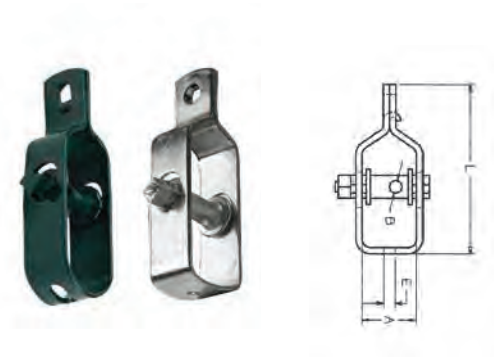

⚠*

## A186

**WIRE-TIE FOR AGRICULTURE** - Body: Steel Fe 360 B - Pin: Cast iron

| Size | A mm | B mm | E mm | L mm | Weight Kg |
|---|---|---|---|---|---|
| **1** | 26 | 6 | 5,5 | 80 | 0,08 |
| **2** | 26 | 6 | 5,5 | 92 | 0,09 |
| **3** | 26 | 6 | 5,5 | 104 | 0,1 |

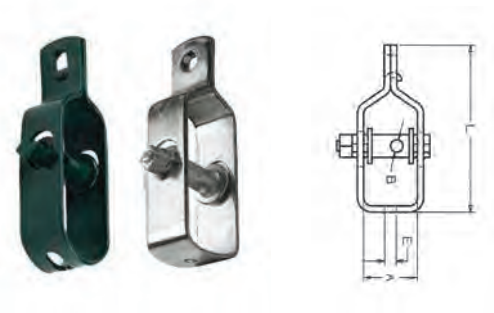

⚠*

## A154

**“S” HOOK** - Steel

| Size<br>mm | L<br>mm | L1<br>mm | Ø<br>mm | Weight<br>Kg |
|---|---|---|---|---|
| **3** | 30 | 16 | 3 | 0,003 |
| **3,4** | 33,5 | 20 | 3,4 | 0,005 |
| **4** | 38,5 | 21,5 | 4 | 0,008 |
| **4,4** | 39 | 26 | 4,4 | 0,01 |
| **5** | 46 | 26,5 | 5 | 0,013 |
| **5,5** | 48 | 28 | 5,5 | 0,017 |
| **6** | 52,5 | 31,5 | 6 | 0,022 |
| **7** | 61 | 36 | 7 | 0,037 |
| **8** | 64 | 44 | 8 | 0,05 |



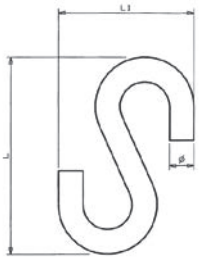

⚠*

## A187B

**GALVANIZED CHAIN** - Steel Fe 360B

| Chain ø<br>mm | A<br>mm | B<br>mm | Weight<br>Kg |
|---|---|---|---|
| **1,6** | 12,8 | 4,3 | 0,05 |
| **1,8** | 14,5 | 4,5 | 0,056 |
| **2,2** | 15 | 5,5 | 0,095 |
| **2,5** | 16 | 6 | 0,11 |
| **2,8** | 17,5 | 6,5 | 0,14 |
| **3** | 19 | 7 | 0,17 |
| **3,5** | 20 | 7,5 | 0,22 |
| **4** | 20,5 | 8 | 0,295 |
| **4,5** | 22 | 8,5 | 0,37 |
| **5** | 23 | 9,5 | 0,47 |
| **5,5** | 27 | 10 | 0,56 |
| **6** | 29 | 11 | 0,67 |
| **6,5** | 30,5 | 11,5 | 0,8 |
| **7** | 30,5 | 12,5 | 0,96 |
| **7,5** | 32 | 13,5 | 1,1 |
| **8** | 35 | 14,5 | 1,26 |
| **8,8** | 37,5 | 15,5 | 1,55 |
| **10** | 40 | 17,5 | 2 |
| **12** | 47,5 | 20,5 | 3 |
| **14** | 52,5 | 25 | 4 |
| **16** | 55 | 25 | 5,2 |
| **20** | 70 | 29 | 8,2 |





⚠*

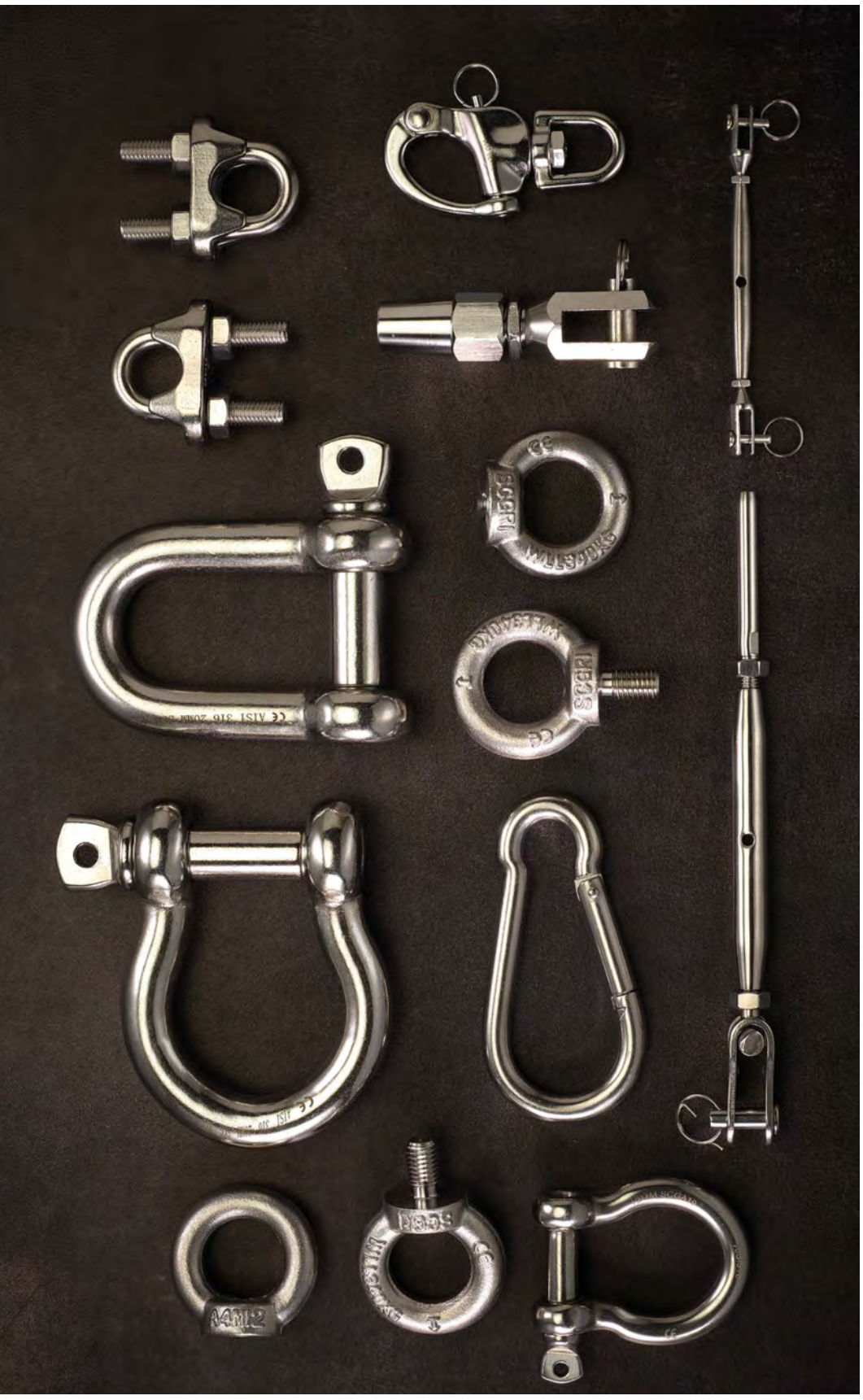

# HARDWARE VOOR STAALKABEL & KETTINGEN | RVS

# HARDWARE POUR CÂBLES ET CHAÎNES | INOXYDABLE

# HARDWARE FOR WIRE ROPES & CHAINS | STAINLESS STEEL

# HARDWARE FÜR DRAHTSEILE UND -KETTEN | NIRO

HIJSTECHNIEK
LIFTING TECHNICS
TECHINIQUE LEVAGE
HEBETECHNIK

DECORLUX

# CARFER

## A501

**STAINLESS STEEL TURNBUCKLE WITH TWO FORKS** - Steel AISI 316

| Size | **Rope ø** mm | **A** mm | **B** mm | **C** mm | **D** mm | **Weight** Kg |
|---|---|---|---|---|---|---|
| **M 4** | 2 | 110 | 160 | 4 | 4 | 0,04 |
| **M 5** | 2,5 | 120 | 180 | 4 | 5 | 0,06 |
| **M 6** | 3 | 135 | 190 | 5 | 6 | 0,08 |
| **M 8** | 4 | 160 | 220 | 7 | 8 | 0,16 |
| **M 10** | 5 | 185 | 260 | 8 | 10 | 0,27 |
| **M 12** | 6-7 | 250 | 365 | 10 | 12 | 0,38 |
| **M 14** | 8 | 260 | 380 | 12 | 14 | 0,68 |
| **M 16** | 10 | 305 | 460 | 14 | 16 | 1,03 |
| **M 20** | 14 | 440 | 660 | 16 | 18 | 2,22 |



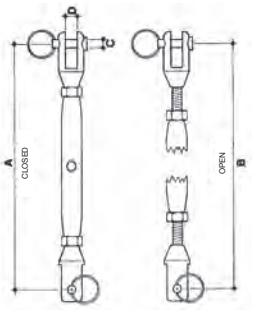


⚠ *

## A502

**STAINLESS STEEL TURNBUCKLE WITH FORK AND TERMINAL** - Steel AISI 316

| Size | **Rope ø** mm | **A** mm | **B** mm | **C** mm | **D** mm | **E** mm | **F** mm | **Weight** Kg |
|---|---|---|---|---|---|---|---|---|
| **M 6** | 3 | 185 | 230 | 32 | 6 | 3,2 | 6 | 0,08 |
| **M 8** | 4 | 210 | 275 | 40 | 8 | 4,2 | 8 | 0,13 |
| **M 10** | 5 | 235 | 325 | 50 | 10 | 5,2 | 10 | 0,23 |
| **M 12** | 6 | 320 | 435 | 60 | 12 | 6,2 | 12 | 0,48 |
| **M 14** | 7 | 360 | 515 | 70 | 14 | 7,2 | 14 | 0,62 |
| **M 16** | 8 | 415 | 575 | 78 | 16 | 8,2 | 16 | 1,12 |
| **M 20** | 10 | 480 | 600 | 85 | 18 | 10,5 | 18 | 2,2 |



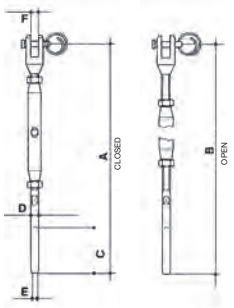


⚠ *

## A503

**STAINLESS STEEL TURNBUCKLE WITH TWO JOINT FORKS** - Steel AISI 316

| Size | **Rope ø** mm | **A** mm | **B** mm | **C** mm | **D** mm | **Weight** Kg |
|---|---|---|---|---|---|---|
| **M 6** | 3 | 135 | 190 | 5 | 8 | 0,09 |
| **M 8** | 4 | 190 | 260 | 8 | 10 | 0,18 |
| **M 10** | 5 | 230 | 320 | 8 | 12 | 0,34 |
| **M 12** | 6-7 | 280 | 380 | 8 | 14 | 0,54 |



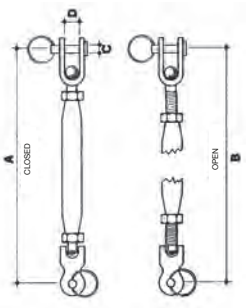


⚠ *

## A504

**STAINLESS STEEL TURNBUCKLE WITH JOINT FORK AND TERMINAL** - Steel AISI 316

| Size | Rope ø mm | A mm | B mm | C mm | D mm | Weight Kg |
|---|---|---|---|---|---|---|
| M 6 | 3 | 150 | 200 | 6 | 8 | 0,08 |
| M 8 | 4 | 190 | 250 | 8 | 10 | 0,15 |
| M 10 | 5 | 235 | 305 | 10 | 12 | 0,28 |
| M 12 | 6 | 310 | 410 | 12 | 14 | 0,5 |



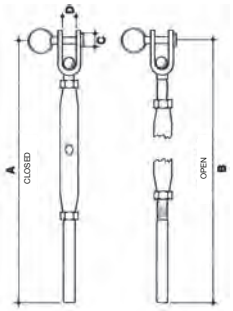


⚠*

## A505

**STAINLESS STEEL TURNBUCKLE WITH TWO WELDED FORKS** - Steel AISI 316

| Size | Rope ø mm | A mm | B mm | C mm | D mm | Weight Kg |
|---|---|---|---|---|---|---|
| M 5 | 2,5 | 125 | 175 | 6 | 11 | 0,06 |
| M 6 | 3 | 135 | 200 | 6 | 11 | 0,08 |
| M 8 | 4 | 145 | 210 | 6 | 11 | 0,16 |
| M 10 | 5 | 180 | 250 | 8 | 13 | 0,27 |
| M 12 | 6-7 | 210 | 300 | 12 | 12 | 0,38 |
| M 14 | 7 | 260 | 410 | 12 | 13 | 0,68 |
| M 16 | 8 | 290 | 460 | 14 | 15 | 1,03 |
| M 20 | 10 | 350 | 520 | 15 | 21 | 2,22 |



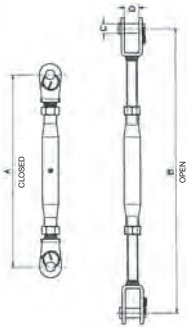


⚠*

## A506B

**STAINLESS STEEL TURNBUCKLE WITH SWIFT TERMINAL** - Steel AISI 316

| Size | Rope ø mm | A mm | B mm | C mm | Weight Kg |
|---|---|---|---|---|---|
| 6 | 3 | 165 | 220 | 6 | 0,08 |
| 8 | 4 | 185 | 250 | 8 | 0,15 |
| 10 | 5 | 220 | 295 | 10 | 0,27 |
| 12 | 6 | 290 | 390 | 12 | 0,57 |



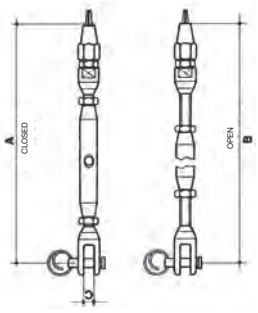


⚠*

## A507B

**STAINLESS STEEL PARAFIL TURNBUCKLE** - Steel AISI 316

| Size<br>mm | A<br>mm | B<br>mm | C<br>mm | D<br>mm | Weight<br>Kg |
|---|---|---|---|---|---|
| 7 | 185 | 240 | 6 | 12 | 0,09 |
| 9 | 190 | 260 | 6 | 14 | 0,11 |



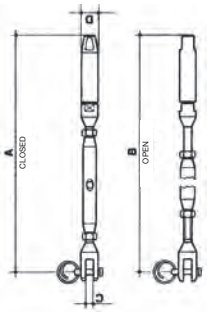


⚠ *

## A508

**STAINLESS STEEL TURNBUCKLE EYE AND EYE** - Steel AISI 316

| Size | A<br>mm | D<br>mm | L1<br>mm | L2<br>mm | S.W.L.<br>Kg | Weight<br>Kg |
|---|---|---|---|---|---|---|
| M 5 | 5 | 8 | 70 | 110±170 | 140 | 0,04 |
| M 6 | 6 | 10 | 90 | 140±220 | 225 | 0,08 |
| M 8 | 8 | 14 | 120 | 180±280 | 410 | 0,16 |
| M 10 | 10 | 16 | 150 | 230±360 | 650 | 0,25 |
| M 12 | 12 | 18 | 200 | 280±460 | 930 | 0,56 |
| M 16 | 16 | 26 | 250 | 370±590 | 1770 | 1 |
| M 20 | 20 | 30 | 300 | 420±650 | 2700 | 1,9 |



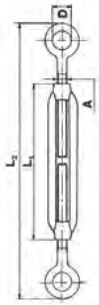


⚠ *

## A509

**STAINLESS STEEL TURNBUCKLE EYE AND HOOK** - Steel AISI 316

| Size | A<br>mm | B<br>mm | D<br>mm | L1<br>mm | L2<br>mm | S.W.L.<br>Kg | Weight<br>Kg |
|---|---|---|---|---|---|---|---|
| M 5 | 5 | 9 | 8 | 70 | 110±170 | 50 | 0,04 |
| M 6 | 6 | 10 | 10 | 90 | 140±220 | 75 | 0,08 |
| M 8 | 8 | 11 | 14 | 120 | 180±280 | 165 | 0,17 |
| M 10 | 10 | 12 | 16 | 150 | 230±360 | 235 | 0,27 |
| M 12 | 12 | 14 | 18 | 200 | 280±460 | 320 | 0,56 |
| M 16 | 16 | 16 | 26 | 250 | 370±590 | 530 | 1,1 |
| M 20 | 20 | 18 | 30 | 300 | 420±650 | 730 | 1,9 |



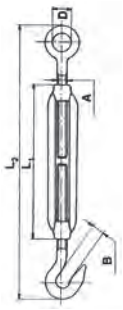


⚠ *

## A510

**STAINLESS STEEL TURNBUCKLE HOOK AND HOOK** - Steel AISI 316

| Size | A<br>mm | B<br>mm | L1<br>mm | L2<br>mm | S.W.L.<br>Kg | Weight<br>Kg |
|---|---|---|---|---|---|---|
| M 5 | 5 | 9 | 70 | 110±170 | 50 | 0,04 |
| M 6 | 6 | 10 | 90 | 140±220 | 75 | 0,08 |
| M 8 | 8 | 11 | 120 | 180±280 | 165 | 0,16 |
| M 10 | 10 | 12 | 150 | 230±360 | 235 | 0,25 |
| M 12 | 12 | 14 | 200 | 280±460 | 320 | 0,56 |
| M 16 | 16 | 16 | 250 | 370±590 | 530 | 1,1 |
| M 20 | 20 | 18 | 300 | 420±650 | 730 | 1,87 |



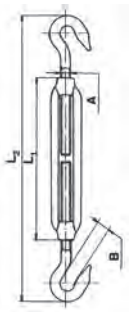


⚠*

## A575B

**STAINLESS STEEL EYE** - Steel AISI 316

| Size<br>mm | A<br>mm | B<br>mm | C<br>mm | E<br>mm | L<br>mm | S.W.L.<br>Kg | Weight<br>Kg |
|---|---|---|---|---|---|---|---|
| M 6 | 10 | 21 | 55 | 60 | 79 | 225 | 0,016 |
| M 8 | 11 | 24 | 55 | 60 | 86 | 410 | 0,03 |
| M 10 | 14 | 31 | 60 | 68 | 100 | 650 | 0,07 |
| M 12 | 16 | 37 | 66 | 74 | 112 | 930 | 0,09 |



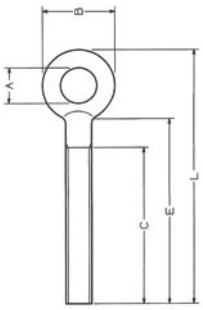


⚠*

## A576B

**STAINLESS STEEL HOOK** - Steel AISI 316

| Size<br>mm | B<br>mm | C<br>mm | D<br>mm | E<br>mm | L<br>mm | S.W.L.<br>Kg | Weight<br>Kg |
|---|---|---|---|---|---|---|---|
| M 6 | 9,5 | 50 | 22,5 | 8 | 77 | 75 | 0,015 |
| M 8 | 11 | 55 | 30 | 10 | 93 | 165 | 0,03 |
| M 10 | 14 | 60 | 36 | 12,5 | 103,5 | 235 | 0,06 |
| M 12 | 18 | 66 | 47 | 16 | 122 | 320 | 0,13 |



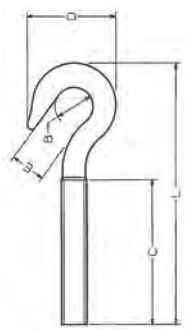


⚠*

## A512

**STAINLESS STEEL PIN WITH SAFETY RING** - Steel AISI 316

| Size | D<br>mm | L<br>mm | O<br>mm | H<br>mm | Weight<br>Kg |
|---|---|---|---|---|---|
| **5** | 3,8 | 15 | 13 | 18 | 0,01 |
| **6** | 4,8 | 16 | 14 | 20 | 0,01 |
| **8** | 6,6 | 21 | 18 | 24 | 0,01 |
| **10** | 7,8 | 27 | 22,5 | 28,5 | 0,01 |
| **12** | 9,7 | 29,5 | 26,5 | 32,5 | 0,01 |
| **14** | 9,8 | 35 | 30 | 37,7 | 0,02 |
| **16** | 11,6 | 31 | 28 | 34 | 0,04 |
| **20** | 15,3 | 50 | 44 | 54 | 0,08 |



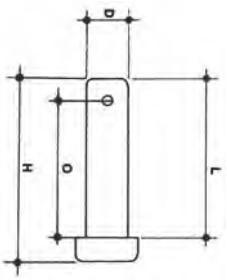


⚠ *

## A513

**STAINLESS STEEL FORK TERMINAL** - Steel AISI 316

| Rope ø<br>mm | D1<br>mm | D2<br>mm | L<br>mm | A1<br>mm | A2<br>mm | C<br>mm | Weight<br>Kg |
|---|---|---|---|---|---|---|---|
| **3** | 3,2 | 6,3 | 38 | 5 | 7 | 67 | 0,02 |
| **4** | 4,3 | 7,5 | 49 | 6 | 11 | 80 | 0,05 |
| **5** | 5,3 | 9 | 52 | 8 | 12 | 95 | 0,06 |
| **6** | 6,4 | 12,9 | 63 | 9 | 14 | 117 | 0,13 |
| **7** | 7,4 | 14,5 | 72 | 9 | 15 | 130 | 0,13 |
| **8** | 8,4 | 16 | 85 | 12 | 17 | 159 | 0,23 |
| **10** | 10,5 | 18 | 90 | 16 | 20 | 166 | 0,33 |
| **12** | 12,5 | 20 | 105 | 16 | 23 | 213 | 0,52 |



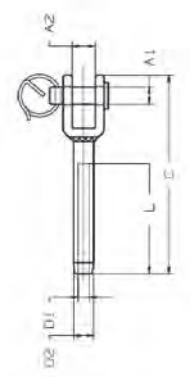


⚠ *

## A514

**STAINLESS STEEL EYE TERMINAL** - Steel AISI 316

| Rope ø<br>mm | D1<br>mm | D2<br>mm | A<br>mm | B<br>mm | C<br>mm | E<br>mm | F<br>mm | Weight<br>Kg |
|---|---|---|---|---|---|---|---|---|
| **3** | 3,3 | 6,3 | 6 | 4 | 65 | 14,5 | 16,5 | 0,014 |
| **4** | 4,3 | 7,5 | 8 | 5 | 70 | 17 | 21 | 0,025 |
| **5** | 5,3 | 9,1 | 10 | 7 | 92 | 22 | 28 | 0,042 |
| **6** | 6,4 | 12,5 | 12 | 8 | 120 | 28 | 34 | 0,098 |
| **7** | 7,4 | 14,3 | 12,7 | 9 | 120 | 28 | 37 | 0,11 |
| **8** | 8,4 | 16,1 | 14,5 | 10 | 140 | 32 | 40 | 0,186 |
| **10** | 10,5 | 18 | 16 | 12 | 162 | 36 | 48 | 0,28 |
| **12** | 12,6 | 20 | 18 | 16 | 180 | 40 | 55 | 0,378 |



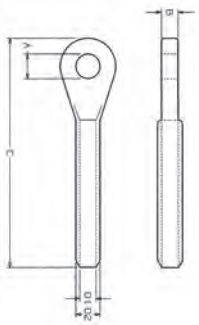


⚠ *

## A586

**STAINLESS STEEL SWAGE STUD** - Steel AISI 316

| Size | L1 mm | L2 mm | L3 mm | A mm | B mm | C mm | D mm | Weight Kg |
|---|---|---|---|---|---|---|---|---|
| 6 | 100 | 39 | 48 | 6,3 | 3,3 | 5 | M 6 | 0,03 |
| 8 | 117 | 45 | 57 | 7,5 | 4,3 | 5,9 | M 8 | 0,07 |
| 10 | 130 | 51 | 63 | 9 | 5,3 | 6,9 | M 10 | 0,08 |
| 12 | 162 | 64 | 80 | 12,5 | 6,3 | 10,8 | M 12 | 0,11 |
| 14 | 180 | 70 | 90 | 14 | 7,3 | 11,8 | M 14 | 0,17 |
| 16 | 195 | 76 | 100 | 16 | 8,3 | 13,8 | M 16 | 0,22 |
| 20 | 230 | 89 | 119 | 18 | 10,3 | 15 | M 20 | 0,4 |

⚠ *



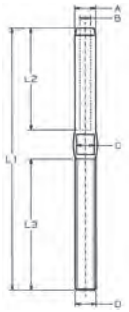


## A516B

**STAINLESS STEEL EYE PARAFIL TERMINAL** - Steel AISI 316

| Rope ø mm | S mm | D mm | L mm | Weight Kg |
|---|---|---|---|---|
| 7 | 6 | 5,5 | 78 | 0,04 |
| 9 | 6 | 5,5 | 78 | 0,05 |

⚠ *



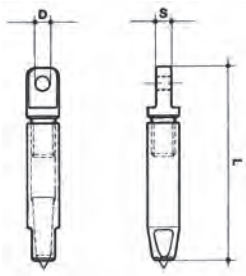


## A517B

**STAINLESS STEEL FORK PARAFIL TERMINAL** - Steel AISI 316

| Rope ø mm | A mm | D mm | L mm | S mm | Weight Kg |
|---|---|---|---|---|---|
| 7 | 12 | 4,5 | 75 | 6 | 0,05 |
| 9 | 14 | 4,5 | 76 | 6 | 0,05 |



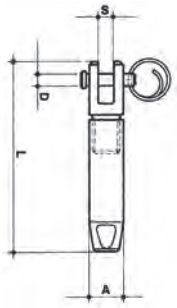


## A518

**PARAFIL CABLE**

| Rope ø mm | Weight Kg/m |
|---|---|
| 7 | 0,04 |
| 8,5 | 0,06 |

⚠ *



## A519

**STAINLESS STEEL SWIFT EYE TERMINAL** - Steel AISI 304

| Size<br>ø mm | A<br>mm | B<br>mm | C<br>mm | L<br>mm | Weight<br>Kg |
|---|---|---|---|---|---|
| 7 | 11 | 11 | 27 | 87 | 0,11 |
| 8 | 13 | 11 | 30 | 100 | 0,19 |
| 10 | 16 | 11 | 40 | 130 | 0,35 |
| 12 | 19 | 18 | 43 | 140 | 0,81 |
| 14 | 22 | 21 | 46 | 150 | 0,94 |



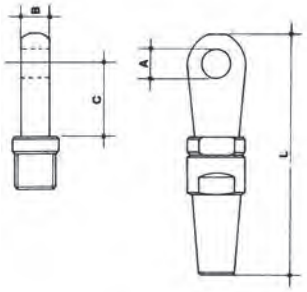


⚠ *

## A519B

**STAINLESS STEEL SWIFT EYE TERMINAL** - Steel AISI 316

| Size<br>ø mm | A<br>mm | B<br>mm | C<br>mm | L<br>mm | Weight<br>Kg |
|---|---|---|---|---|---|
| 3 | 6 | 6 | 12 | 60 | 0,02 |
| 4 | 8 | 7 | 16 | 75 | 0,04 |
| 5 | 10 | 8 | 18 | 86 | 0,07 |
| 6 | 12 | 10 | 22 | 96 | 0,11 |
| 7 | 11 | 10 | 22 | 87 | 0,11 |
| 8 | 13 | 11 | 30 | 100 | 0,19 |
| 10 | 15 | 14 | 35 | 126 | 0,35 |



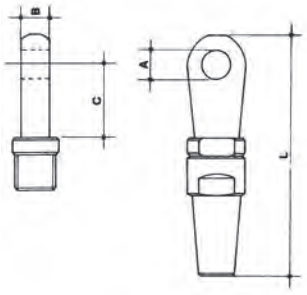


⚠ *

## A520

**STAINLESS STEEL SWIFT FORK TERMINAL** - Steel AISI 304

| Size<br>ø mm | A<br>mm | B<br>mm | C<br>mm | L<br>mm | Weight<br>Kg |
|---|---|---|---|---|---|
| 7 | 12 | 8 | 18 | 90 | 0,14 |
| 8 | 12 | 10 | 20 | 100 | 0,21 |
| 10 | 14 | 12 | 28 | 120 | 0,4 |
| 12 | 18 | 16 | 34 | 140 | 0,71 |
| 14 | 21 | 18 | 38 | 170 | 1,52 |



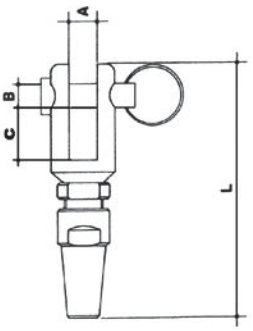


⚠ *

## A520B

**STAINLESS STEEL SWIFT FORK TERMINAL** - Steel AISI 316

| Size<br>ø mm | A<br>mm | B<br>mm | C<br>mm | L<br>mm | Weight<br>Kg |
|---|---|---|---|---|---|
| 3 | 6 | 6 | 11 | 67 | 0,03 |
| 4 | 8 | 6 | 15 | 84 | 0,05 |
| 5 | 10 | 8 | 14 | 85 | 0,09 |
| 6 | 10 | 10 | 14 | 98 | 0,14 |
| 7 | 12 | 8 | 12 | 85 | 0,14 |
| 8 | 12 | 10 | 16 | 96 | 0,21 |
| 10 | 14 | 12 | 20 | 120 | 0,4 |



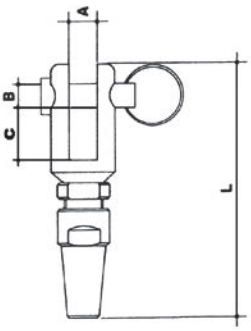


⚠*

## A521 - A521B

**STAINLESS STEEL DEE SHACKLE** - Steel AISI 304 - Steel AISI 316

| Size<br>mm | D<br>mm | A<br>mm | L<br>mm | H<br>mm | S.W.L.<br>Kg | Weight<br>Kg |
|---|---|---|---|---|---|---|
| 4 | 4 | 8 | 16 | 24 | 50 | 0,01 |
| 5 | 5 | 10 | 20 | 30 | 70 | 0,02 |
| 6 | 6 | 14 | 26 | 37 | 100 | 0,03 |
| 8 | 8 | 16 | 32 | 48 | 250 | 0,07 |
| 10 | 10 | 20 | 45 | 64 | 400 | 0,13 |
| 12 | 12 | 25 | 48 | 72 | 630 | 0,22 |
| 14 | 14 | 29 | 63 | 88,5 | 750 | 0,31 |
| 16 | 16 | 34 | 64 | 96 | 1000 | 0,38 |
| 20 | 19 | 40 | 76 | 114 | 1600 | 0,69 |
| 22 | 22 | 47 | 96 | 143 | 2000 | 1,2 |
| 25 | 25 | 50 | 100 | 150 | 2500 | 1,3 |
| 28 | 28 | 56 | 112 | 168 | 3150 | 3 |
| 32 | 32 | 64 | 128 | 192 | 4000 | 4,17 |



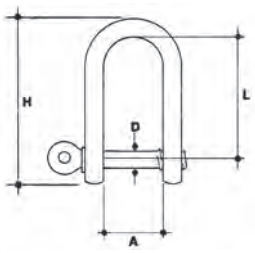


⚠*

## A522 - A522B

**STAINLESS STEEL BOW SHACKLE** - Steel AISI 304 - Steel AISI 316

| Size<br>mm | D<br>mm | E<br>mm | A<br>mm | L<br>mm | S.W.L.<br>Kg | Weight<br>Kg |
|---|---|---|---|---|---|---|
| 4 | 4 | 12,5 | 8 | 16 | 50 | 0,01 |
| 5 | 5 | 15 | 10 | 20 | 80 | 0,02 |
| 6 | 6 | 21 | 14 | 24 | 100 | 0,03 |
| 8 | 8 | 24 | 16 | 32 | 200 | 0,08 |
| 10 | 10 | 31 | 20 | 40 | 300 | 0,13 |
| 12 | 12 | 38 | 26 | 48 | 500 | 0,22 |
| 14 | 14 | 43,5 | 30 | 63,5 | 600 | 0,35 |
| 16 | 16 | 52 | 32 | 64 | 800 | 0,37 |
| 20 | 19 | 59 | 42 | 76 | 1100 | 0,95 |
| 22 | 22 | 67 | 44 | 88 | 1500 | 1,35 |
| 25 | 25 | 76,5 | 54 | 100 | 2000 | 2,2 |
| 28 | 28 | 86 | 56 | 112 | 2600 | 2,88 |
| 32 | 32 | 101 | 64 | 128 | 3200 | 4,1 |



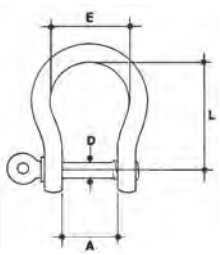


⚠*

## A523

**STAINLESS STEEL LONG SHACKLE** - Steel AISI 316

| Size<br>mm | P<br>mm | L<br>mm | D<br>mm | S<br>mm | Weight<br>Kg |
|---|---|---|---|---|---|
| 4 | 8 | 30 | 4 | 4 | 0,01 |
| 5 | 10 | 38 | 5 | 5 | 0,02 |
| 6 | 12 | 46 | 6 | 6 | 0,03 |
| 8 | 15 | 60 | 8 | 8 | 0,08 |
| 10 | 20 | 75 | 10 | 10 | 0,17 |
| 12 | 23 | 90 | 12 | 12 | 0,28 |



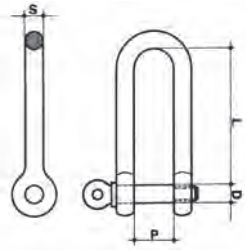


⚠*

## A524

**STAINLESS STEEL TWISTED SHACKLE** - Steel AISI 316

| Size<br>mm | D<br>mm | P<br>mm | L<br>mm | S<br>mm | Weight<br>Kg |
|---|---|---|---|---|---|
| 4 | 4 | 8 | 22 | 4 | 0,01 |
| 5 | 5 | 10 | 28 | 5 | 0,01 |
| 6 | 6 | 12 | 34 | 6 | 0,03 |
| 8 | 8 | 16 | 40 | 8 | 0,07 |
| 10 | 10 | 20 | 45 | 10 | 0,13 |
| 12 | 12 | 24 | 52 | 12 | 0,22 |



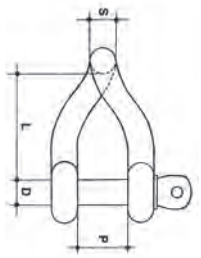


⚠*

## A591

**STAINLESS STEEL DEE SHACKLE WITH FLAT HEAD PIN** - Steel AISI 316

| Size<br>mm | D<br>mm | A<br>mm | L<br>mm | H<br>mm | S.W.L.<br>Kg | Weight<br>Kg |
|---|---|---|---|---|---|---|
| 6 | 6 | 13 | 27 | 39 | 100 | 0,03 |
| 8 | 8 | 16 | 35 | 51 | 250 | 0,07 |
| 10 | 10 | 19 | 42,5 | 61,5 | 400 | 0,13 |
| 12 | 12 | 24,5 | 54 | 78 | 630 | 0,22 |
| 14 | 14 | 28,5 | 61 | 89,5 | 750 | 0,31 |



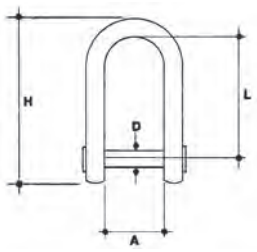


⚠*

## A594

**STAINLESS STEEL DEE SHACKLE WITH PIN WITH SQUARE SUNKEN HOLE** - Steel AISI 316

| Size<br>mm | D<br>mm | A<br>mm | C<br>mm | L<br>mm | H<br>mm | S.W.L.<br>Kg | Weight<br>Kg |
|---|---|---|---|---|---|---|---|
| 6 | 6 | 14 | 3 | 26 | 37 | 100 | 0,03 |
| 8 | 8 | 16 | 3 | 32 | 48 | 250 | 0,07 |
| 10 | 10 | 20 | 5 | 45 | 64 | 400 | 0,13 |
| 12 | 12 | 25 | 6 | 48 | 72 | 630 | 0,22 |
| 14 | 14 | 29 | 7 | 63 | 88,5 | 750 | 0,31 |
| 16 | 16 | 34 | 8 | 64 | 96 | 1000 | 0,38 |
| 20 | 19 | 40 | 10 | 76 | 114 | 1600 | 0,69 |
| 22 | 22 | 47 | 11 | 96 | 143 | 2000 | 1,2 |
| 25 | 25 | 50 | 12 | 100 | 150 | 2500 | 1,3 |




⚠ *

## A595

**STAINLESS STEEL DEE SHACKLE WITH ALLEN PIN** - Steel AISI 316

| Size<br>mm | D<br>mm | A<br>mm | C<br>mm | L<br>mm | H<br>mm | S.W.L.<br>Kg | Weight<br>Kg |
|---|---|---|---|---|---|---|---|
| 6 | 6 | 14 | 3 | 26 | 37 | 100 | 0,03 |
| 8 | 8 | 16 | 4 | 32 | 48 | 250 | 0,07 |
| 10 | 10 | 20 | 5 | 45 | 64 | 400 | 0,13 |
| 12 | 12 | 25 | 6 | 48 | 72 | 630 | 0,22 |
| 14 | 14 | 29 | 7 | 63 | 88,5 | 750 | 0,31 |

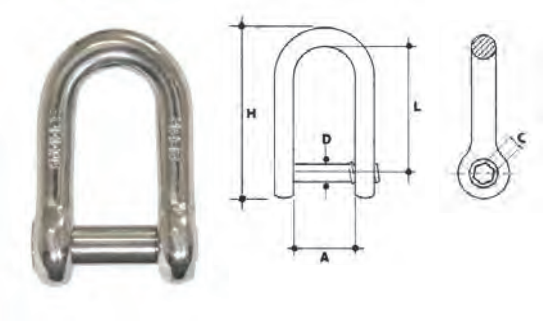


⚠ *

NEW

## A596

**STAINLESS STEEL FLAT SHACKLE** - Steel AISI 316

| Size | A<br>mm | B1<br>mm | D<br>mm | D1<br>mm | L<br>mm | T<br>mm | Weight<br>Kg |
|---|---|---|---|---|---|---|---|
| M 4 | 9 | 5 | 4 | 9 | 20 | 1,5 | 0,004 |
| M 5 | 10,5 | 6,5 | 5 | 11 | 21 | 2 | 0,008 |
| M 6 | 13,5 | 8 | 6 | 12 | 28 | 2,5 | 0,016 |

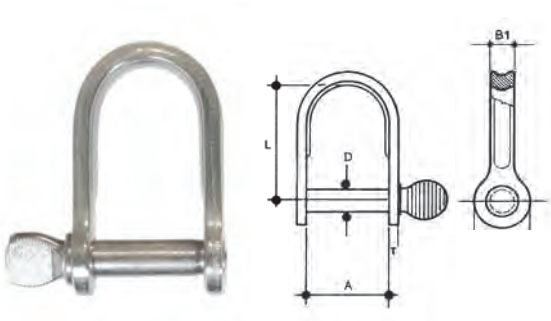


⚠ *

## A525

**STAINLESS STEEL FLAT SHACKLE SHORT TYPE** - Steel AISI 316

| Size<br>mm | D<br>mm | A<br>mm | L<br>mm | H<br>mm | Weight<br>Kg |
|---|---|---|---|---|---|
| 4 | 4 | 10 | 17 | 23 | 0,01 |
| 5 | 5 | 12 | 20 | 28 | 0,015 |
| 6 | 6 | 16 | 24 | 33 | 0,02 |



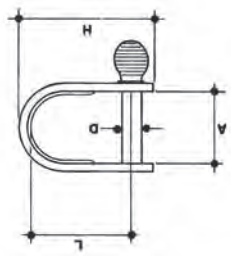


⚠*

## A526

**STAINLESS STEEL FLAT SHACKLE LONG TYPE** - Steel AISI 316

| Size<br>mm | D<br>mm | A<br>mm | L<br>mm | H<br>mm | Weight<br>Kg |
|---|---|---|---|---|---|
| 4 | 4 | 12 | 26 | 33 | 0,01 |
| 5 | 5 | 16 | 27 | 35 | 0,01 |
| 6 | 6 | 17 | 29 | 40 | 0,02 |



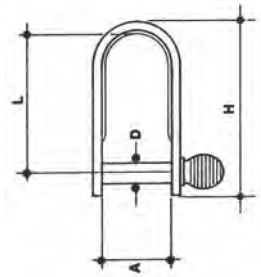


⚠*

## A527B

**STAINLESS STEEL FLAT SHACKLE SHORT TYPE WITH SAFETY RING** - Steel AISI 316

| Size<br>mm | A<br>mm | L<br>mm | D<br>mm | S<br>mm | Weight<br>Kg |
|---|---|---|---|---|---|
| 4 | 10 | 15 | 4 | 5 | 0,01 |
| 5 | 12 | 17 | 5 | 6 | 0,01 |
| 6 | 16 | 21 | 6 | 7 | 0,02 |



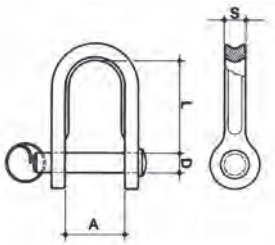


⚠*

## A528

**STAINLESS STEEL FLAT SHACKLE LONG TYPE WITH SAFETY RING** - Steel AISI 316

| Size<br>mm | A<br>mm | L<br>mm | D<br>mm | S<br>mm | Weight<br>Kg |
|---|---|---|---|---|---|
| 4 | 12 | 24 | 4 | 5 | 0,01 |
| 5 | 16 | 25 | 5 | 6 | 0,01 |
| 6 | 17 | 26 | 6 | 7 | 0,02 |

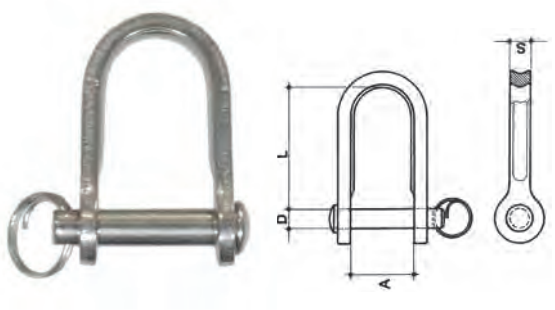


⚠*

## A529B

**STAINLESS STEEL FLAT AND TWISTED SHACKLE** - Steel AISI 316

| Size<br>mm | P<br>mm | L<br>mm | D<br>mm | S<br>mm | Weight<br>Kg |
|---|---|---|---|---|---|
| 4 | 11 | 22 | 4 | 5 | 0,01 |
| 5 | 12 | 37 | 5 | 6 | 0,02 |

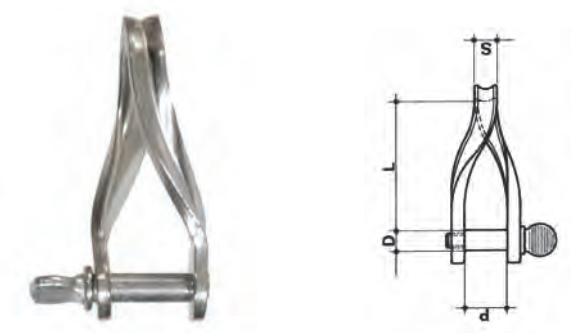


⚠*

## A530 - A530B

**STAINLESS STEEL SNAP HOOK** - Steel AISI 304 - Steel AISI 316

| Size<br>mm | A<br>mm | B<br>mm | C<br>mm | D<br>mm | L<br>mm | Weight<br>Kg |
|---|---|---|---|---|---|---|
| 40 | 4 | 6 | 5 | 6 | 40 | 0,008 |
| 50 | 5 | 8 | 6 | 7 | 50 | 0,02 |
| 60 | 6 | 9 | 7,5 | 8 | 60 | 0,03 |
| 70 | 7 | 10 | 8,5 | 9 | 70 | 0,05 |
| 80 | 8 | 12 | 9 | 11 | 80 | 0,07 |
| 90 | 9 | 13 | 9,5 | 12 | 90 | 0,09 |
| 100 | 10 | 15 | 10,5 | 13 | 100 | 0,13 |
| 120 | 11 | 19 | 15,5 | 16 | 120 | 0,19 |
| 140 | 12 | 20 | 14 | 21 | 140 | 0,26 |
| 160 | 13 | 23 | 18 | 22 | 160 | 0,36 |

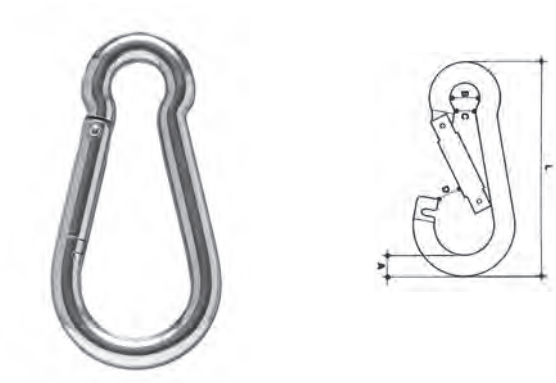

⚠*

## A531 - A531B

**STAINLESS STEEL SNAP HOOK WITH RING** - Steel AISI 304 - Steel AISI 316

| Size<br>mm | A<br>mm | B<br>mm | D<br>mm | L<br>mm | Weight<br>Kg |
|---|---|---|---|---|---|
| **40** | 4 | 4,5 | 6 | 40 | 0,009 |
| **50** | 5 | 7 | 7 | 50 | 0,02 |
| **60** | 6 | 8 | 8 | 60 | 0,03 |
| **70** | 7 | 9 | 9 | 70 | 0,05 |
| **80** | 8 | 10,5 | 11 | 80 | 0,07 |
| **90** | 9 | 12 | 12 | 90 | 0,09 |
| **100** | 10 | 14 | 13 | 100 | 0,13 |
| **120** | 11 | 18 | 16 | 120 | 0,19 |
| **140** | 12 | 18 | 21 | 140 | 0,26 |
| **160** | 13 | 20 | 22 | 160 | 0,36 |



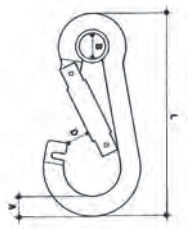

⚠*

## A532

**STAINLESS STEEL ASYMMETRICAL SNAP HOOK** - Steel AISI 316

| Size<br>mm | L<br>mm | S<br>mm | M<br>mm | Weight<br>Kg |
|---|---|---|---|---|
| **80** | 80 | 8 | 12 | 0,07 |
| **100** | 100 | 10 | 18 | 0,13 |



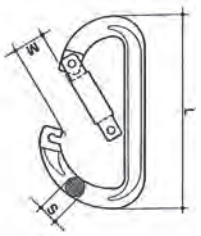

⚠*

## A534

**STAINLESS STEEL SNAP HOOK WITH SPECIAL OPENING** - Steel AISI 316

| Size<br>mm | L<br>mm | S<br>mm | O<br>mm | F<br>mm | H<br>mm | Weight<br>Kg |
|---|---|---|---|---|---|---|
| **80** | 80 | 8 | 11 | 8 | 19 | 0,07 |
| **100** | 100 | 10 | 15 | 10,5 | 22 | 0,17 |
| **120** | 120 | 11 | 18 | 12 | 26 | 0,19 |



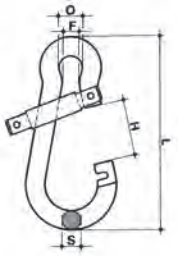

⚠*

## A535

**STAINLESS STEEL SNAP HOOK WITH EYE AND SPECIAL OPENING** - Steel AISI 316

| Size<br>mm | L<br>mm | S<br>mm | O<br>mm | H<br>mm | Weight<br>Kg |
|---|---|---|---|---|---|
| **80** | 80 | 8 | 10 | 19 | 0,07 |
| **100** | 100 | 10 | 14 | 22 | 0,13 |



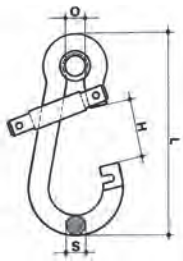


⚠*

## A580

**STAINLESS STEEL SNAP HOOK** - Steel AISI 316

| Size<br>mm | A<br>mm | B<br>mm | C<br>mm | D<br>mm | L<br>mm | Breaking Load<br>kN | Weight<br>Kg |
|---|---|---|---|---|---|---|---|
| **80** | 12 | 9 | 17 | 8 | 85 | 15 | 0,08 |
| **100** | 13 | 10 | 17 | 10 | 100 | 22 | 0,15 |
| **120** | 18 | 15 | 23 | 11 | 125 | 28 | 0,22 |



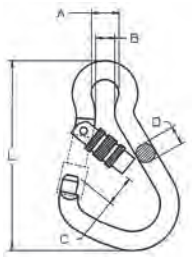


⚠*

## A581

**STAINLESS STEEL SNAP HOOK WITH RING** - Steel AISI 316

| Size<br>mm | A<br>mm | C<br>mm | D<br>mm | L<br>mm | S.W.L.<br>Kg | Weight<br>Kg |
|---|---|---|---|---|---|---|
| **50** | 7 | 7,5 | 5 | 50 | 120 | 0,017 |
| **60** | 8 | 9 | 6 | 60 | 120 | 0,028 |
| **80** | 11 | 11 | 8 | 80 | 230 | 0,067 |
| **100** | 14 | 15 | 10 | 100 | 350 | 0,129 |



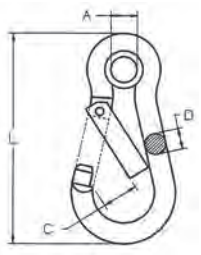


⚠*

## A582

**STAINLESS STEEL SNAP HOOK WITH RING** - Steel AISI 316

| Size<br>mm | A<br>mm | C<br>mm | D<br>mm | L<br>mm | S.W.L.<br>Kg | Weight<br>Kg |
|---|---|---|---|---|---|---|
| **100** | 14 | 13 | 10 | 100 | 350 | 0,134 |
| **120** | 17 | 16 | 11 | 120 | 450 | 0,19 |



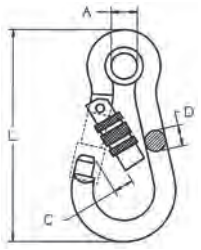


⚠ *

## A583

**STAINLESS STEEL SNAP HOOK** - Steel AISI 316

| Size<br>mm | A<br>mm | B<br>mm | C<br>mm | D<br>mm | L<br>mm | S.W.L.<br>Kg | Weight<br>Kg |
|---|---|---|---|---|---|---|---|
| **100** | 15 | 10,5 | 13 | 10 | 100 | 350 | 0,133 |
| **120** | 18 | 12 | 16 | 11 | 120 | 450 | 0,189 |



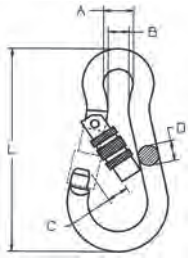


⚠ *

## A536

**STAINLESS STEEL SWIVEL SNAP SHACKLE** - Steel AISI 316

| Size<br>mm | A<br>mm | B<br>mm | L<br>mm | Weight<br>Kg |
|---|---|---|---|---|
| **1** | 12 | 12 | 70 | 0,05 |
| **2** | 16 | 16 | 87 | 0,12 |
| **3** | 22 | 22 | 128 | 0,33 |



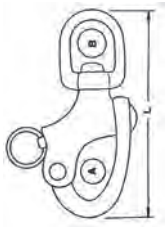

⚠ *

## A537

**STAINLESS STEEL FIXED SNAP SHACKLE** - Steel AISI 316

| Size<br>mm | A<br>mm | B<br>mm | L<br>mm | Weight<br>Kg |
|---|---|---|---|---|
| **1** | 12 | 9 | 52 | 0,04 |
| **2** | 16 | 12 | 66 | 0,09 |
| **3** | 22 | 16 | 96 | 0,22 |



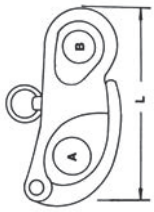


⚠*

## A539

**STAINLESS STEEL SPRING SNAP** - Steel AISI 316

| Size<br>mm | A<br>mm | B<br>mm | L<br>mm | Weight<br>Kg |
|---|---|---|---|---|
| **50** | 6 | 8 | 50 | 0,02 |
| **70** | 10 | 12 | 70 | 0,05 |
| **100** | 13 | 16 | 100 | 0,15 |



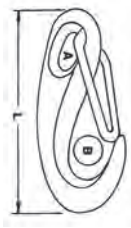


⚠*

## A541

**STAINLESS STEEL SWIVEL** - Steel AISI 316

| Size<br>mm | A<br>mm | B<br>mm | C<br>mm | D<br>mm | H<br>mm | S<br>mm | S.W.L.<br>Kg | Weight<br>Kg |
|---|---|---|---|---|---|---|---|---|
| **5** | 5 | 13 | 19 | 6 | 30 | 5 | 100 | 0,03 |
| **6** | 6 | 15 | 20 | 7 | 33 | 6 | 225 | 0,06 |
| **8** | 8 | 20 | 28 | 11 | 47 | 8 | 450 | 0,09 |
| **10** | 10 | 24 | 35 | 13 | 58 | 10 | 625 | 0,24 |
| **13** | 14 | 32 | 46 | 18 | 77 | 13 | 875 | 0,53 |
| **16** | 16 | 39 | 56 | 22 | 94 | 16 | 1250 | 1,14 |
| **20** | 20 | 41 | 63 | 33 | 115 | 19 | 2500 | 1,83 |
| **22** | 22 | 47 | 70 | 34 | 127 | 22 | 3250 | 3 |
| **25** | 25 | 63 | 88 | 35 | 148 | 25 | 4000 | 4 |



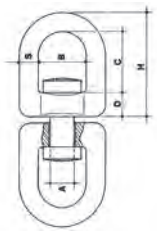


⚠*

## A542

**STAINLESS STEEL EYE AND JAW SWIVEL** - Steel AISI 316

| Size | A mm | B mm | C mm | D mm | S.W.L. Kg | Weight Kg |
|---|---|---|---|---|---|---|
| **5** | 56 | 10 | 10 | 5 | 100 | 0,037 |
| **6** | 66 | 12 | 11 | 6 | 225 | 0,058 |
| **8** | 94 | 16 | 16 | 8 | 450 | 0,15 |
| **10** | 118 | 20 | 22 | 10 | 625 | 0,29 |
| **13** | 152 | 26 | 28 | 13 | 875 | 0,6 |
| **16** | 188 | 32 | 37 | 16 | 1250 | 1,06 |
| **19** | 229 | 38 | 45 | 19 | 2500 | 1,88 |
| **22** | 240 | 42 | 50 | 22 | 3250 | 2,02 |
| **25** | 275 | 52 | 56 | 24 | 4000 | 3,35 |



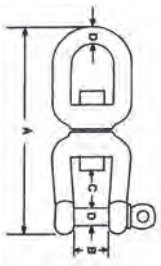

⚠ *

## A543

**STAINLESS STEEL JAW AND JAW SWIVEL** - Steel AISI 316

| Size | A mm | B mm | C mm | D mm | S.W.L. Kg | Weight Kg |
|---|---|---|---|---|---|---|
| **5** | 56 | 10 | 9 | 5 | 100 | 0,037 |
| **6** | 66 | 12 | 11 | 6 | 225 | 0,066 |
| **8** | 94 | 16 | 16 | 8 | 450 | 0,17 |
| **10** | 118 | 20 | 22 | 10 | 625 | 0,33 |
| **13** | 152 | 26 | 28 | 13 | 875 | 0,67 |
| **16** | 188 | 32 | 37 | 16 | 1250 | 1,15 |
| **19** | 229 | 38 | 45 | 19 | 2500 | 2,08 |
| **22** | 235 | 42 | 50 | 22 | 3250 | 2,18 |
| **25** | 275 | 52 | 56 | 24 | 4000 | 3,55 |



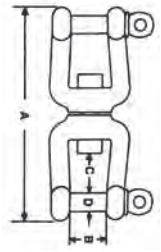

⚠ *

## A544

**STAINLESS STEEL QUICK LINK** - Steel AISI 316

| Diameter / D mm | L1 mm | B1 mm | S mm | Weight Kg |
|---|---|---|---|---|
| **3,5** | 29 | 10 | 4,5 | 0,01 |
| **4** | 32 | 12 | 5,5 | 0,01 |
| **5** | 39 | 13 | 6,5 | 0,02 |
| **6** | 45 | 14 | 7,5 | 0,03 |
| **7** | 52 | 16 | 8,5 | 0,06 |
| **8** | 58 | 18 | 9,5 | 0,08 |
| **9** | 62 | 20 | 11 | 0,11 |
| **10** | 69 | 22 | 12 | 0,15 |
| **12** | 81 | 24 | 14,5 | 0,23 |



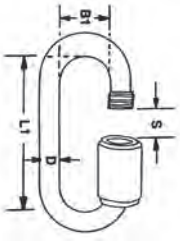

⚠ *

## A545

**STAINLESS STEEL EYE BOLT WITH NUT AND WASHER** - Steel AISI 316

| Size | A<br>mm | B<br>mm | L<br>mm | C<br>mm | Weight<br>Kg |
|---|---|---|---|---|---|
| M 5 x 40 | 12 | 22 | 40 | 4 | 0,02 |
| M 6 x 60 | 12 | 22 | 60 | 6 | 0,03 |
| M 6 x 80 | 12 | 22 | 80 | 8 | 0,03 |
| M 8 x 60 | 14 | 27 | 60 | 6 | 0,05 |
| M 8 x 80 | 14 | 27 | 80 | 8 | 0,06 |
| M 8 x 100 | 14 | 27 | 100 | 10 | 0,06 |
| M 10 x 100 | 16 | 31 | 100 | 10 | 0,1 |
| M 12 x 120 | 18 | 36 | 120 | 12 | 0,16 |



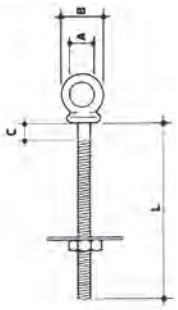


⚠ *

## A546

**STAINLESS STEEL "U" BOLT PRODUCED FROM TURNED BAR** - Steel AISI 316

| Size | A<br>mm | B<br>mm | C<br>mm | L1<br>mm | L2<br>mm | Weight<br>Kg |
|---|---|---|---|---|---|---|
| M 4 x 62 | 30 | 30 | 6 | 25 | 37 | 0,03 |
| M 5 x 78 | 35 | 40 | 7 | 30 | 48 | 0,05 |
| M 6 x 90 | 35 | 45 | 8 | 35 | 55 | 0,07 |
| M 8 x 100 | 35 | 52 | 10 | 38 | 62 | 0,11 |
| M 8 x 120 | 45 | 62 | 10 | 47 | 73 | 0,14 |
| M 10 x 130 | 50 | 62 | 12 | 55 | 75 | 0,25 |
| M 12 x 150 | 60 | 65 | 14 | 65 | 85 | 0,4 |



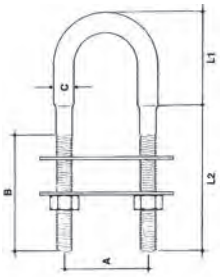


⚠ *

## A577

**STAINLESS STEEL BOLT WITH 2 NUTS + 2 WASHERS UNI EN 10088-3** - Steel AISI 304

| | Light | | | | | | Heavy | | | | | |
|---|---|---|---|---|---|---|---|---|---|---|---|---|
| Tube<br>inch | D<br>mm | d | F | H<br>mm | I<br>mm | Weight<br>Kg | D<br>mm | d | F<br>mm | H<br>mm | I<br>mm | Weight<br>Kg |
| 1-8 | 11 | M 6 | 16 | 34 | 17 | 0,02 | | | | | | |
| 1-4 | 14 | M 6 | 16 | 37 | 20 | 0,021 | | | | | | |
| 3-8 | 18 | M 6 | 16 | 41 | 24 | 0,022 | | | | | | |
| 1-2 | 22 | M 6 | 18 | 45 | 28 | 0,024 | 22 | M 8 | 25 | 55 | 30 | 0,052 |
| 3-4 | 27 | M 6 | 18 | 50 | 33 | 0,026 | 27 | M 8 | 25 | 59 | 35 | 0,055 |
| 1 | 34 | M 6 | 18 | 57 | 40 | 0,029 | 34 | M 8 | 25 | 67 | 42 | 0,061 |
| 1 1/4 | 43 | M 6 | 18 | 66 | 49 | 0,033 | 43 | M 8 | 25 | 75 | 51 | 0,068 |
| 1 1/2 | 49 | M 8 | 28 | 77 | 57 | 0,07 | 49 | M 10 | 36 | 87 | 59 | 0,128 |
| 2 | 61 | M 8 | 28 | 89 | 69 | 0,08 | 61 | M 10 | 36 | 99 | 71 | 0,142 |
| 2 1/2 | 77 | M 8 | 28 | 105 | 85 | 0,093 | 77 | M 10 | 36 | 115 | 87 | 0,164 |
| 3 | 89 | M 8 | 28 | 117 | 97 | 0,102 | 89 | M 10 | 36 | 127 | 99 | 0,186 |
| 3 1/2 | 102 | M 8 | 35 | 134 | 110 | 0,115 | 102 | M 12 | 45 | 148 | 114 | 0,296 |
| 4 | 115 | M 8 | 35 | 146 | 123 | 0,125 | 115 | M 12 | 45 | 162 | 127 | 0,32 |
| 5 | 140 | M 8 | 35 | 172 | 148 | 0,145 | 140 | M 12 | 45 | 186 | 152 | 0,366 |
| 6 | 168 | M 10 | 45 | 205 | 178 | 0,278 | | | | | | |
| 8 | 220 | M 10 | 45 | 257 | 230 | 0,344 | | | | | | |
| 10 | 274 | M 10 | 45 | 311 | 284 | 0,412 | | | | | | |



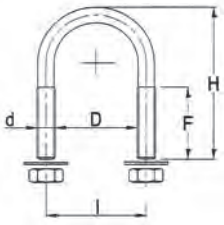


⚠ *

## A548

**STAINLESS STEEL BRIDGE** - Steel AISI 316

| Size | L<br>mm | A2<br>mm | A1<br>mm | B<br>mm | C<br>mm | Weight<br>Kg |
|---|---|---|---|---|---|---|
| **10 x 11** | 10 | 30 | 11 | 4,2 | 1,5 | 0,004 |
| **13 x 15** | 13 | 34 | 15 | 5,2 | 2 | 0,01 |
| **17 x 20** | 17 | 40 | 20 | 5,2 | 3 | 0,02 |

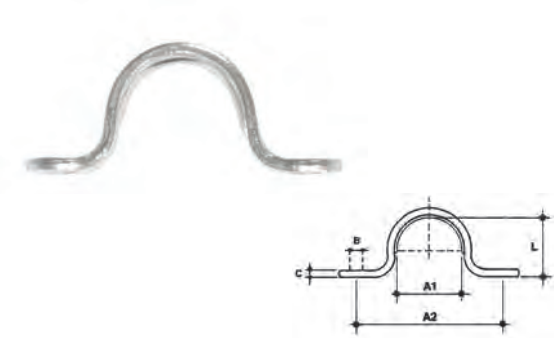


⚠ *

## A549

**STAINLESS STEEL WIRE ROPE CLIP** - Steel AISI 316

| Size<br>ø mm | A<br>mm | B<br>mm | C<br>mm | E<br>mm | F<br>mm | H<br>mm | L<br>mm | D<br>mm | Weight<br>Kg |
|---|---|---|---|---|---|---|---|---|---|
| **3-4** | 22 | 14 | 8 | 7 | 3,5 | 12 | 22 | 4 | 0,01 |
| **5** | 24 | 16 | 9 | 8 | 4 | 15 | 24 | 5 | 0,02 |
| **6** | 30 | 18 | 11 | 10 | 5 | 18 | 33 | 6 | 0,03 |
| **8** | 33 | 20 | 12 | 10 | 5 | 20 | 35 | 6 | 0,04 |
| **10** | 37 | 22 | 14 | 13 | 6,5 | 22 | 43 | 8 | 0,07 |
| **12** | 45 | 25 | 16 | 17 | 8 | 30 | 54 | 10 | 0,12 |
| **14** | 46 | 27 | 18 | 17 | 8 | 30 | 54 | 10 | 0,15 |
| **16** | 53 | 30 | 20 | 17 | 8 | 30 | 65 | 10 | 0,2 |
| **18** | 55 | 31,5 | 21 | 19 | 10 | 35 | 80 | 12 | 0,24 |
| **19-20** | 58 | 33 | 22 | 19 | 10 | 35 | 80 | 12 | 0,27 |
| **22** | 64 | 34 | 23 | 19 | 10 | 43 | 85 | 12 | 0,31 |
| **25** | 69 | 39 | 24 | 19 | 10 | 43 | 85 | 12 | 0,36 |
| **28** | 80 | 42 | 30 | 22 | 13 | 52 | 105 | 14 | 0,6 |
| **32** | 92 | 46 | 37 | 24 | 13 | 52 | 110 | 16 | 0,9 |

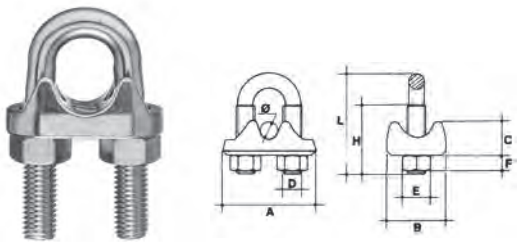


⚠ *

## A550

**STAINLESS STEEL SIMPLEX WIRE ROPE CLIP** - Steel AISI 316

| Rope ø<br>mm | D<br>mm | E<br>mm | F<br>mm | H<br>mm | L<br>mm | M<br>mm | Q | S<br>mm | Weight<br>Kg |
|---|---|---|---|---|---|---|---|---|---|
| **2** | 5 | 12 | 7,5 | 17,5 | 5 | 1 | M 4 | 1 | 0,01 |
| **3** | 5 | 15 | 10 | 17,5 | 6,5 | 1,5 | M 4 | 1,5 | 0,02 |
| **4** | 6,5 | 18 | 12 | 22 | 7,5 | 1,5 | M 5 | 1,5 | 0,03 |
| **5** | 6,5 | 20 | 14 | 24 | 8,5 | 1,5 | M 5 | 1,5 | 0,03 |
| **6** | 7 | 23 | 17 | 30 | 10 | 1,5 | M 6 | 1,5 | 0,04 |
| **8** | 10 | 30 | 22 | 36 | 14 | 2 | M 8 | 2 | 0,05 |
| **10** | 11 | 34 | 25 | 42 | 16 | 2 | M 10 | 3 | 0,09 |

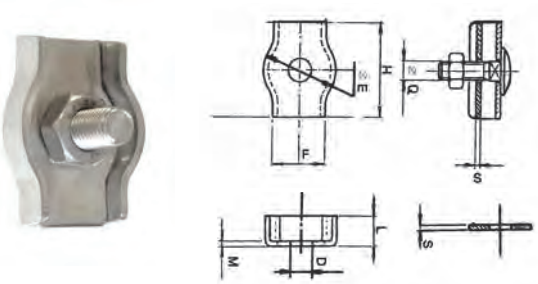


⚠ *

# A551

**STAINLESS STEEL DUPLEX WIRE ROPE CLIP** - Steel AISI 316

| Rope ø mm | A mm | C mm | D mm | E mm | F mm | L mm | M mm | Q | S mm | Weight Kg |
|---|---|---|---|---|---|---|---|---|---|---|
| 2 | 20,5 | 38 | 5 | 12 | 7,5 | 5 | 1 | M 4 | 1 | 0,01 |
| 3 | 20,5 | 38 | 5 | 15 | 10 | 6,5 | 1,5 | M 4 | 1,5 | 0,03 |
| 4 | 25 | 47 | 6,5 | 18 | 12 | 7,5 | 1,5 | M 5 | 1,5 | 0,03 |
| 5 | 27 | 51 | 6,5 | 20 | 14 | 8,5 | 1,5 | M 5 | 1,5 | 0,03 |
| 6 | 33 | 63 | 7 | 23 | 17 | 10 | 1,5 | M 6 | 1,5 | 0,05 |
| 8 | 42 | 76 | 10 | 30 | 22 | 14 | 2 | M 8 | 2 | 0,1 |
| 10 | 46 | 88 | 11 | 34 | 25 | 16 | 2 | M 10 | 3 | 0,18 |

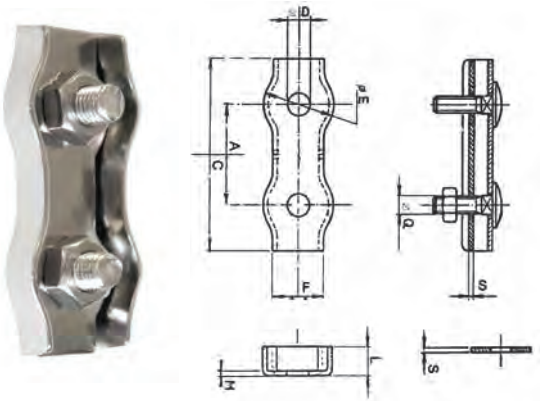


⚠ *

# A552

**STAINLESS STEEL THIMBLE** - Steel AISI 316

| Size mm | A mm | B mm | C mm | S mm | Weight Kg |
|---|---|---|---|---|---|
| 2 | 2 | 7 | 10 | 0,7 | 0,003 |
| 2,5 | 2,5 | 8 | 14 | 0,7 | 0,002 |
| 3 | 3 | 9 | 15 | 1 | 0,006 |
| 4 | 4 | 11 | 18 | 1 | 0,008 |
| 5 | 5 | 14 | 20 | 1,2 | 0,01 |
| 6 | 6 | 15 | 23 | 1,2 | 0,01 |
| 8 | 8 | 18 | 29 | 1,5 | 0,02 |
| 10 | 10 | 24 | 37 | 1,5 | 0,03 |
| 12 | 12 | 29 | 50 | 1,5 | 0,04 |
| 14 | 14 | 33 | 54 | 2 | 0,08 |
| 16 | 16 | 37 | 64 | 2 | 0,12 |
| 18 | 18 | 40 | 70 | 2,5 | 0,15 |
| 20 | 20 | 45 | 75 | 2,5 | 0,18 |
| 22 | 23 | 45 | 78 | 2,5 | 0,19 |
| 24 | 25 | 49 | 79 | 2,5 | 0,21 |
| 26 | 28 | 60 | 105 | 3 | 0,36 |
| 28 | 30 | 65 | 115 | 3 | 0,42 |
| 30 | 32 | 73 | 128 | 4 | 0,71 |

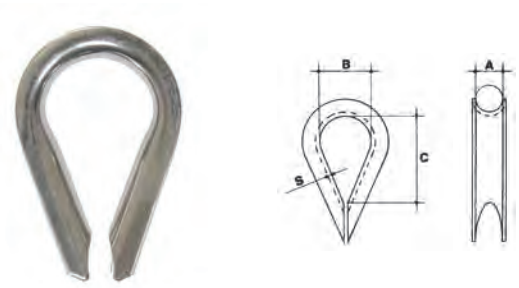


# A553

**STAINLESS STEEL EYE BOLT DIN 580** - Steel AISI 304/316 - Forged

| Size | | A mm | B mm | C mm | E mm | F mm | G mm | H mm | L mm | ⊥ SWL Kg | ∧ 45° SWL Kg | ⊣ 90° SWL Kg | Max tightening torque Nm | Weight Kg |
|---|---|---|---|---|---|---|---|---|---|---|---|---|---|---|
| | M 6 | 20 | 36 | 20 | 6 | 8 | 10 | 36 | 13 | 75 | 55 | 38 | 3,5 | 0,06 |
| | M 8 | 20 | 36 | 20 | 6 | 8 | 10 | 36 | 13 | 140 | 100 | 70 | 8 | 0,06 |
| | M 10 | 25 | 45 | 25 | 8 | 10 | 12 | 45 | 17 | 230 | 170 | 115 | 16 | 0,11 |
| | M 12 | 30 | 54 | 30 | 10 | 12 | 14 | 53 | 20,5 | 340 | 240 | 170 | 28 | 0,18 |
| SIMILAR TO DIN | M 14 | 30 | 54 | 30 | 10 | 12 | 14 | 53 | 20,5 | 500 | 240 | 170 | 45 | 0,19 |
| | M 14 | 35 | 63 | 35 | 12 | 14 | 16 | 62 | 27 | 490 | 350 | 245 | 45 | 0,27 |
| | M 16 | 35 | 63 | 35 | 12 | 14 | 16 | 62 | 27 | 700 | 500 | 350 | 70 | 0,28 |
| SIMILAR TO DIN | M 18 | 35 | 63 | 35 | 12 | 14 | 16 | 62 | 27 | 930 | 500 | 350 | 95 | 0,33 |
| | M 18 | 40 | 72 | 40 | 14 | 16 | 19 | 71 | 30 | 850 | 600 | 425 | 95 | 0,44 |
| | M 20 | 40 | 72 | 40 | 14 | 16 | 19 | 71 | 30 | 1200 | 860 | 600 | 135 | 0,45 |
| SIMILAR TO DIN | M 22 | 40 | 72 | 40 | 14 | 16 | 19 | 71 | 30 | 1500 | 860 | 600 | 182 | 0,5 |
| | M 22 | 50 | 90 | 50 | 18 | 20 | 24 | 90 | 36 | 1400 | 1000 | 700 | 182 | 0,72 |
| | M 24 | 50 | 90 | 50 | 18 | 20 | 24 | 90 | 36 | 1800 | 1290 | 900 | 230 | 0,74 |
| | M 30 | 60 | 108 | 65 | 22 | 24 | 28 | 109 | 45 | 3200 | 2300 | 1600 | 465 | 1,66 |

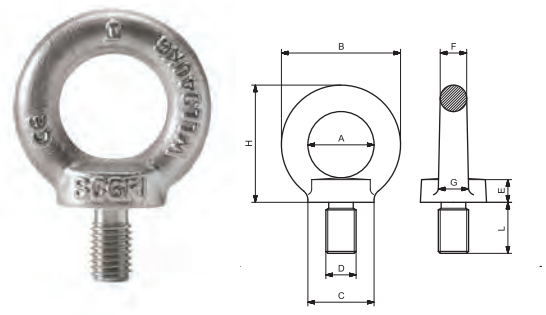

## A584

**STAINLESS STEEL EYE BOLT SIMILAR TO DIN 580** - Steel AISI 304/316 - Casted

| Size | A | B | C | E | F | G | H | L | ⊥ SWL | ∧ 45° SWL | ⊦ 90° SWL | **Max tightening torque** | **Weight** |
|---|---|---|---|---|---|---|---|---|---|---|---|---|---|
| | mm | mm | mm | mm | mm | mm | mm | mm | Kg | Kg | Kg | Nm | Kg |
| **M 6** | 20 | 36 | 20 | 6 | 8 | 10 | 36 | 13 | 75 | 55 | 38 | 3,5 | 0,06 |
| **M 8** | 20 | 36 | 20 | 6 | 8 | 10 | 36 | 13 | 140 | 100 | 70 | 8 | 0,06 |
| **M 10** | 25 | 45 | 25 | 8 | 10 | 12 | 45 | 17 | 230 | 170 | 115 | 16 | 0,11 |
| **M 12** | 30 | 54 | 30 | 10 | 12 | 14 | 53 | 20,5 | 340 | 240 | 170 | 28 | 0,18 |
| **M 14** (BODY M 12) | 30 | 54 | 30 | 10 | 12 | 14 | 53 | 20,5 | 500 | 240 | 170 | 45 | 0,19 |
| **M 14** | 35 | 63 | 35 | 12 | 14 | 16 | 62 | 27 | 490 | 350 | 245 | 45 | 0,27 |
| **M 16** | 35 | 63 | 35 | 12 | 14 | 16 | 62 | 27 | 700 | 500 | 350 | 70 | 0,28 |
| **M 18** (BODY M 16) | 35 | 63 | 35 | 12 | 14 | 16 | 62 | 27 | 930 | 500 | 350 | 95 | 0,33 |
| **M 18** | 40 | 72 | 40 | 14 | 16 | 19 | 71 | 30 | 850 | 600 | 425 | 95 | 0,44 |
| **M 20** | 40 | 72 | 40 | 14 | 16 | 19 | 71 | 30 | 1200 | 860 | 600 | 135 | 0,45 |
| **M 24** | 50 | 90 | 50 | 18 | 20 | 24 | 90 | 36 | 1800 | 1290 | 900 | 230 | 0,74 |

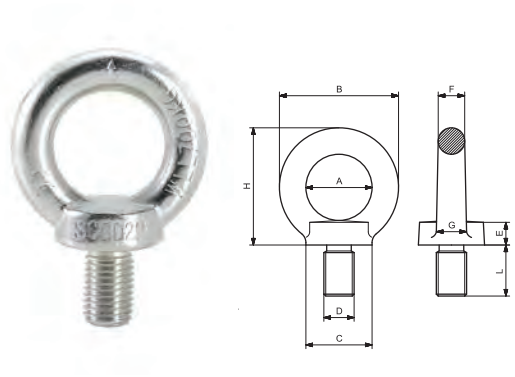


## A554

**STAINLESS STEEL EYE NUT DIN 582** - Steel AISI 304/316 - Forged

| Size | | A | B | C | E | F | G | H | ⊥ SWL | ∧ 45° SWL | ⊦ 90° SWL | **Max tightening torque** | **Weight** |
|---|---|---|---|---|---|---|---|---|---|---|---|---|---|
| | | mm | mm | mm | mm | mm | mm | mm | Kg | Kg | Kg | Nm | Kg |
| | **M 6** | 20 | 36 | 20 | 8,5 | 8 | 10 | 36 | 75 | 55 | 38 | 3,5 | 0,05 |
| | **M 8** | 20 | 36 | 20 | 8,5 | 8 | 10 | 36 | 140 | 100 | 70 | 8 | 0,05 |
| | **M 10** | 25 | 45 | 25 | 10 | 10 | 12 | 45 | 230 | 170 | 115 | 16 | 0,09 |
| | **M 12** | 30 | 54 | 30 | 11 | 12 | 14 | 53 | 340 | 240 | 170 | 28 | 0,16 |
| SIMILAR TO DIN | **M 14** | 30 | 54 | 30 | 11 | 12 | 14 | 53 | 500 | 240 | 170 | 45 | 0,15 |
| | **M 14** | 35 | 63 | 35 | 13 | 14 | 16 | 62 | 490 | 350 | 245 | 45 | 0,24 |
| | **M 16** | 35 | 63 | 35 | 13 | 14 | 16 | 62 | 700 | 500 | 350 | 70 | 0,24 |
| SIMILAR TO DIN | **M 18** | 35 | 63 | 35 | 13 | 14 | 16 | 62 | 930 | 500 | 350 | 95 | 0,23 |
| | **M 18** | 40 | 72 | 40 | 16 | 16 | 19 | 71 | 850 | 600 | 425 | 95 | 0,37 |
| | **M 20** | 40 | 72 | 40 | 16 | 16 | 19 | 71 | 1200 | 860 | 600 | 135 | 0,36 |
| SIMILAR TO DIN | **M 22** | 40 | 72 | 40 | 16 | 16 | 19 | 71 | 1500 | 860 | 600 | 182 | 0,35 |
| | **M 22** | 50 | 90 | 50 | 20 | 20 | 24 | 90 | 1400 | 1000 | 700 | 182 | 0,73 |
| | **M 24** | 50 | 90 | 50 | 20 | 20 | 24 | 90 | 1800 | 1290 | 900 | 230 | 0,72 |
| | **M 30** | 60 | 108 | 65 | 25 | 24 | 28 | 109 | 3200 | 2300 | 1600 | 465 | 1,32 |

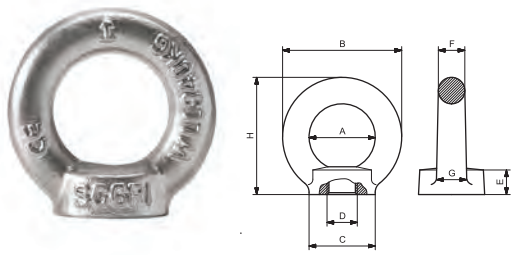


## A585

**STAINLESS STEEL EYE NUT SIMILAR TO DIN 582** - Steel AISI 304/316 - Casted

| Size | A | B | C | E | F | G | H | ⊥ SWL | ∧ 45° SWL | ⊦ 90° SWL | **Max tightening torque** | **Weight** |
|---|---|---|---|---|---|---|---|---|---|---|---|---|
| | mm | mm | mm | mm | mm | mm | mm | Kg | Kg | Kg | Nm | Kg |
| **M 6** | 20 | 36 | 20 | 8,5 | 8 | 10 | 36 | 75 | 55 | 38 | 3,5 | 0,05 |
| **M 8** | 20 | 36 | 20 | 8,5 | 8 | 10 | 36 | 140 | 100 | 70 | 8 | 0,05 |
| **M 10** | 25 | 45 | 25 | 10 | 10 | 12 | 45 | 230 | 170 | 115 | 16 | 0,09 |
| **M 12** | 30 | 54 | 30 | 11 | 12 | 14 | 53 | 340 | 240 | 170 | 28 | 0,16 |
| **M 14** (BODY M 12) | 30 | 54 | 30 | 11 | 12 | 14 | 53 | 500 | 240 | 170 | 45 | 0,15 |
| **M 14** | 35 | 63 | 35 | 13 | 14 | 16 | 62 | 490 | 350 | 245 | 45 | 0,24 |
| **M 16** | 35 | 63 | 35 | 13 | 14 | 16 | 62 | 700 | 500 | 350 | 70 | 0,24 |
| **M 18** (BODY M 16) | 35 | 63 | 35 | 13 | 14 | 16 | 62 | 930 | 500 | 350 | 95 | 0,23 |
| **M 18** | 40 | 72 | 40 | 16 | 16 | 19 | 71 | 850 | 600 | 425 | 95 | 0,37 |
| **M 20** | 40 | 72 | 40 | 16 | 16 | 19 | 71 | 1200 | 860 | 600 | 135 | 0,36 |
| **M 24** | 50 | 90 | 50 | 20 | 20 | 24 | 90 | 1800 | 1290 | 900 | 230 | 0,72 |

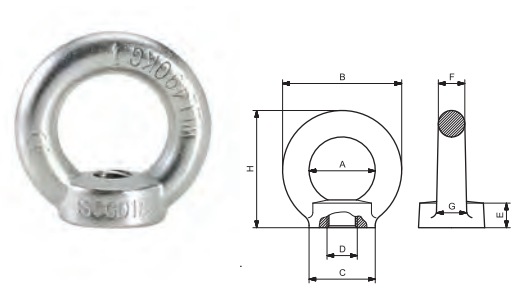

## A556

**STAINLESS STEEL RING BOLT WITH NUT AND TWO WASHERS** - Steel AISI 316

| Size | **A** mm | **B** mm | **D** mm | **E** mm | **L** mm | **Weight** Kg |
|---|---|---|---|---|---|---|
| **M 10 x 85** | 44 | 6 | 10 | 39 | 85 | 0,11 |
| **M 10 x 100** | 44 | 6 | 10 | 39 | 104 | 0,13 |



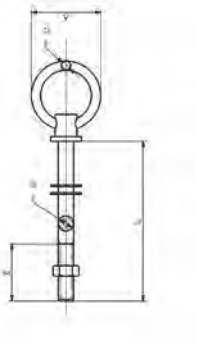

⚠ *

## A559

**COPPER SLEEVE FOR PRESSING**

| Type | **Rope ø** mm | **A** mm | **L** mm | **Weight** Kg |
|---|---|---|---|---|
| **1** | 2 | 2,5 | 9,5 | 0,001 |
| **2** | 2,5 | 3 | 10 | 0,01 |
| **3** | 3 | 4 | 14 | 0,01 |
| **4** | 4 | 5 | 16 | 0,01 |
| **5** | 5 | 6 | 23 | 0,02 |
| **6** | 6 | 7 | 22 | 0,02 |
| **8** | 8 | 9,5 | 27 | 0,05 |
| **10** | 10 | 11,5 | 33 | 0,06 |

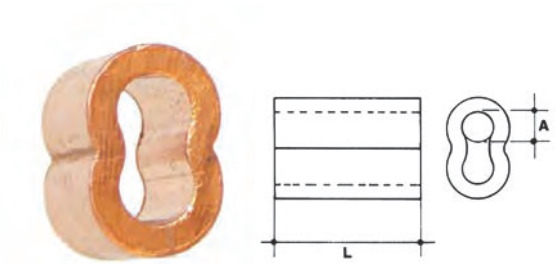


⚠ *

## A561

**STAINLESS STEEL CHAIN - PROOF TYPE RR-C-271 - GRADE 43** - Steel AISI 316

| Diameter mm | inch | **F** mm | **A** mm | **A1≈** mm | **S.W.L.** Kg | **Weight** Kg/m |
|---|---|---|---|---|---|---|
| **2** | **1/12** | 14,5 | 4,5 | 8,5 | 25 | 0,07 |
| **3** | **1/8** | 19 | 7 | 13 | 55 | 0,17 |
| **3,8** | **1/8** | 20,5 | 8 | 16 | 100 | 0,26 |
| **5** | **3/16** | 23 | 9,5 | 19,5 | 160 | 0,57 |
| **6** | **3/32** | 29 | 11 | 23 | 225 | 0,7 |
| **7** | **9/32** | 30,5 | 12,5 | 26,5 | 300 | 0,92 |
| **8** | **5/16** | 35 | 14,5 | 30,5 | 400 | 1,25 |
| **10** | **3/8** | 40 | 17,5 | 37,5 | 630 | 2,09 |
| **13** | **1/2** | 47,5 | 20,5 | 46,5 | 1000 | 3,49 |
| **16** | **5/8** | 55 | 25 | 57 | 1600 | 5,02 |



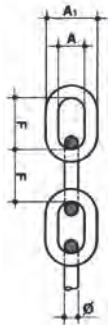


⚠ *

## A562

**STAINLESS STEEL CHAIN - DIN 766 - GRADE 50** - Steel AISI 316

| Diameter<br>mm | **F**<br>mm | **A**<br>mm | **A1≈**<br>mm | **S.W.L.**<br>Kg | **Weight**<br>Kg/m |
|---|---|---|---|---|---|
| **4** | 16 | 6 | 14 | 200 | 0,32 |
| **5** | 18,5 | 7 | 17 | 320 | 0,5 |
| **6** | 18,5 | 8 | 20 | 400 | 0,75 |
| **7** | 22 | 9 | 23 | 630 | 1 |
| **8** | 24 | 10 | 26 | 800 | 1,35 |
| **10** | 28 | 14 | 34 | 1250 | 2,25 |
| **13** | 36 | 18 | 44 | 2000 | 3,9 |
| **16** | 45 | 22 | 54 | 3200 | 5,8 |



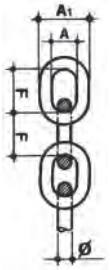


⚠ *

## A563

**STAINLESS STEEL CHAIN - DIN 763/DIN 5685 C - GRADE 50** - Steel AISI 316

| Diameter<br>mm | **F**<br>mm | **A**<br>mm | **A1≈**<br>mm | **S.W.L.**<br>Kg | **Weight**<br>Kg/m |
|---|---|---|---|---|---|
| **2** | 22 | 4 | 8 | 30 | 0,06 |
| **3** | 26 | 6 | 12 | 60 | 0,15 |
| **4** | 32 | 8 | 16 | 100 | 0,27 |
| **5** | 35 | 10 | 20 | 160 | 0,43 |
| **6** | 42 | 12 | 24 | 200 | 0,63 |
| **7** | 49 | 14 | 28 | 300 | 0,86 |
| **8** | 52 | 16 | 32 | 400 | 1,1 |
| **10** | 65 | 20 | 40 | 630 | 1,75 |
| **13** | 82 | 26 | 52 | 1000 | 2,95 |
| **16** | 100 | 32 | 64 | 1600 | 4,45 |



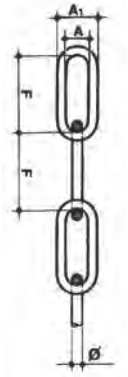


⚠ *

## A564

**STAINLESS STEEL ROUND RING** - Steel AISI 316

| Size<br>mm | **S**<br>mm | **H**<br>mm | **Weight**<br>Kg | Size<br>mm | **S**<br>mm | **H**<br>mm | **Weight**<br>Kg |
|---|---|---|---|---|---|---|---|
| **3 X 20** | 3 | 20 | 0,08 | **8 x 50** | 8 | 50 | 0,07 |
| **5 x 25** | 5 | 25 | 0,01 | **8 x 55** | 8 | 55 | 0,07 |
| **5 x 30** | 5 | 30 | 0,01 | **8 x 60** | 8 | 60 | 0,08 |
| **5 x 35** | 5 | 35 | 0,02 | **8 x 65** | 8 | 65 | 0,09 |
| **5 x 40** | 5 | 40 | 0,02 | **8 x 70** | 8 | 70 | 0,09 |
| **5 x 45** | 5 | 45 | 0,03 | **8 x 75** | 8 | 75 | 0,1 |
| **5 x 50** | 5 | 50 | 0,02 | **9 x 50** | 9 | 50 | 0,09 |
| **6 x 30** | 6 | 30 | 0,02 | **9 x 60** | 9 | 60 | 0,1 |
| **6 x 35** | 6 | 35 | 0,03 | **9 x 70** | 9 | 70 | 0,12 |
| **6 x 40** | 6 | 40 | 0,03 | **9 x 80** | 9 | 80 | 0,14 |
| **6 x 45** | 6 | 45 | 0,04 | **10 x 50** | 10 | 50 | 0,1 |
| **6 x 50** | 6 | 50 | 0,04 | **10 x 60** | 10 | 60 | 0,13 |
| **6 x 55** | 6 | 55 | 0,04 | **10 x 70** | 10 | 70 | 0,15 |
| **6 x 60** | 6 | 60 | 0,04 | **10 x 80** | 10 | 80 | 0,17 |
| **8 x 40** | 8 | 40 | 0,06 | **10 x 90** | 10 | 90 | 0,19 |
| **8 x 45** | 8 | 45 | 0,06 | **10 x 100** | 10 | 100 | 0,21 |



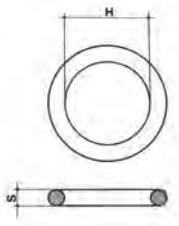


⚠ *

## A568

**STAINLESS STEEL WING NUT - AMERICAN FORM - UNI 5448-71** - Steel AISI 304

| Size<br>Ø | D<br>mm | E<br>mm | H<br>mm | M<br>mm | Weight<br>Kg |
|---|---|---|---|---|---|
| M 3 | 8 | 17,6 | 8,6 | 2,9 | 0,002 |
| M 4 | 8 | 17,6 | 8,6 | 2,9 | 0,002 |
| M 5 | 10,3 | 22,5 | 11 | 4,1 | 0,003 |
| M 6 | 12,7 | 27,8 | 13,6 | 5,1 | 0,01 |
| M 8 | 13,8 | 30,3 | 14,8 | 5,6 | 0,01 |
| M 10 | 16,5 | 36,2 | 17,7 | 6,8 | 0,01 |
| M 12 | 22,5 | 49,4 | 24,1 | 9 | 0,03 |
| M 14 | 26,6 | 58,3 | 28,5 | 10,7 | 0,06 |
| M 16 | 26,6 | 58,3 | 28,5 | 10,7 | 0,06 |
| M 18 | 29,5 | 68,5 | 33,8 | 13,5 | 0,07 |
| M 20 | 29,5 | 68,5 | 33,8 | 13,5 | 0,08 |



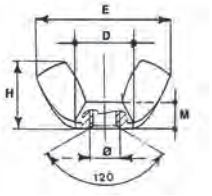


⚠ *

## A569

**STAINLESS STEEL WING SCREW - AMERICAN FORM - UNI 5449-71** - Steel AISI 304

| Size<br>Ø | D<br>mm | E<br>mm | H<br>mm | M<br>mm | L<br>mm | Weight<br>Kg |
|---|---|---|---|---|---|---|
| M 3 x 10 | 8 | 17,6 | 8,6 | 2,9 | 10 | 0,026 |
| M 3 x 15 | 8 | 17,6 | 8,6 | 2,9 | 15 | 0,028 |
| M 3 x 20 | 8 | 17,6 | 8,6 | 2,9 | 20 | 0,03 |
| M 3 x 25 | 8 | 17,6 | 8,6 | 2,9 | 25 | 0,032 |
| M 3 x 30 | 8 | 17,6 | 8,6 | 2,9 | 30 | 0,034 |
| M 4 x 10 | 8 | 17,6 | 8,6 | 2,9 | 10 | 0,03 |
| M 4 x 15 | 8 | 17,6 | 8,6 | 2,9 | 15 | 0,032 |
| M 4 x 20 | 8 | 17,6 | 8,6 | 2,9 | 20 | 0,036 |
| M 4 x 25 | 8 | 17,6 | 8,6 | 2,9 | 25 | 0,04 |
| M 4 x 30 | 8 | 17,6 | 8,6 | 2,9 | 30 | 0,043 |
| M 5 x 10 | 10,3 | 22,5 | 11 | 4,1 | 10 | 0,052 |
| M 5 x 15 | 10,3 | 22,5 | 11 | 4,1 | 15 | 0,056 |
| M 5 x 20 | 10,3 | 22,5 | 11 | 4,1 | 20 | 0,06 |
| M 5 x 25 | 10,3 | 22,5 | 11 | 4,1 | 25 | 0,067 |
| M 5 x 30 | 10,3 | 22,5 | 11 | 4,1 | 30 | 0,074 |
| M 5 x 35 | 10,3 | 22,5 | 11 | 4,1 | 35 | 0,08 |
| M 6 x 10 | 12,7 | 27,8 | 13,6 | 5,1 | 10 | 0,096 |
| M 6 x 15 | 12,7 | 27,8 | 13,6 | 5,1 | 15 | 0,104 |
| M 6 x 20 | 12,7 | 27,8 | 13,6 | 5,1 | 20 | 0,11 |
| M 6 x 25 | 12,7 | 27,8 | 13,6 | 5,1 | 25 | 0,116 |
| M 6 x 30 | 12,7 | 27,8 | 13,6 | 5,1 | 30 | 0,123 |
| M 6 x 35 | 12,7 | 27,8 | 13,6 | 5,1 | 35 | 0,132 |
| M 6 x 40 | 12,7 | 27,8 | 13,6 | 5,1 | 40 | 0,141 |
| M 8 x 10 | 13,8 | 30,3 | 14,8 | 5,6 | 10 | 0,126 |
| M 8 x 15 | 13,8 | 30,3 | 14,8 | 5,6 | 15 | 0,143 |
| M 8 x 20 | 13,8 | 30,3 | 14,8 | 5,6 | 20 | 0,16 |
| M 8 x 25 | 13,8 | 30,3 | 14,8 | 5,6 | 25 | 0,177 |
| M 8 x 30 | 13,8 | 30,3 | 14,8 | 5,6 | 30 | 0,195 |
| M 8 x 35 | 13,8 | 30,3 | 14,8 | 5,6 | 35 | 0,207 |
| M 8 x 40 | 13,8 | 30,3 | 14,8 | 5,6 | 40 | 0,22 |
| M 8 x 45 | 13,8 | 30,3 | 14,8 | 5,6 | 45 | 0,236 |
| M 8 x 50 | 13,8 | 30,3 | 14,8 | 5,6 | 50 | 0,25 |
| M 10 x 20 | 16,5 | 36,2 | 17,7 | 6,8 | 20 | 0,282 |
| M 10 x 25 | 16,5 | 36,2 | 17,7 | 6,8 | 25 | 0,297 |
| M 10 x 30 | 16,5 | 36,2 | 17,7 | 6,8 | 30 | 0,322 |
| M 10 x 35 | 16,5 | 36,2 | 17,7 | 6,8 | 35 | 0,342 |
| M 10 x 40 | 16,5 | 36,2 | 17,7 | 6,8 | 40 | 0,358 |
| M 10 x 45 | 16,5 | 36,2 | 17,7 | 6,8 | 45 | 0,377 |
| M 10 x 50 | 16,5 | 36,2 | 17,7 | 6,8 | 50 | 0,402 |
| M 10 x 55 | 16,5 | 36,2 | 17,7 | 6,8 | 55 | 0,434 |
| M 10 x 60 | 16,5 | 36,2 | 17,7 | 6,8 | 60 | 0,47 |
| M 12 x 25 | 22,5 | 49,4 | 24,1 | 9 | 25 | 0,573 |
| M 12 x 30 | 22,5 | 49,4 | 24,1 | 9 | 30 | 0,595 |
| M 12 x 35 | 22,5 | 49,4 | 24,1 | 9 | 35 | 0,628 |
| M 12 x 40 | 22,5 | 49,4 | 24,1 | 9 | 40 | 0,67 |
| M 12 x 45 | 22,5 | 49,4 | 24,1 | 9 | 45 | 0,71 |
| M 12 x 50 | 22,5 | 49,4 | 24,1 | 9 | 50 | 0,755 |
| M 12 x 55 | 22,5 | 49,4 | 24,1 | 9 | 55 | 0,782 |
| M 12 x 60 | 22,5 | 49,4 | 24,1 | 9 | 60 | 0,81 |



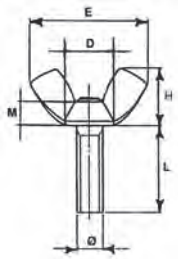


⚠ *

# EDGE

## SAFETY EQUIPMENT



www.decorlux.be
DECORLUX
info@decorlux.be
+32 (0)3 777 69 88
+32 (0)3 778 13 17
Antwerpsesteenweg 96
B-9140 TIELRODE

YOUR SAFETY MATTERS




| | |
|---|---|
| Introductie | 3 |
| Symboolverklaring | 4 |
| Valbeveiliging | 5 |
| - Harnassen | 6 |
| - Lijnen | 18 |
| - Haken | 28 |
| - Ankermiddelen | 30 |
| - Valstopblokken | 32 |
| - Diverse toebehoren en sets | 34 |
| Veiligheidshelmen | 37 |
| Ademhalingsbescherming | 41 |
| Oog-/gelaatsbescherming | 47 |
| Gehoorbescherming | 53 |
| Veiligheidshandschoenen | 57 |
| Corporate identity | 62 |
| Keuring | 63 |
| Training | 63 |


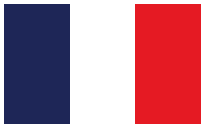


| | |
|---|---|
| Introduction | 3 |
| Explication des symboles | 4 |
| Protection antichute | 5 |
| - Harnais | 6 |
| - Lignes | 18 |
| - Mousquetons | 28 |
| - Moyens d‘ancrage | 30 |
| - Blocs antichute | 32 |
| - Équipements et kits divers | 34 |
| Casques de sécurité | 37 |
| Protection respiratoire | 41 |
| Protection oculaire/faciale | 47 |
| Protection auditive | 53 |
| Gants de protection | 57 |
| Corporate identity | 62 |
| Inspection | 63 |
| Training | 63 |





| | |
|---|---|
| Introduction | 3 |
| Symbol explanation | 4 |
| Fall protection | 5 |
| - Harnesses | 6 |
| - Lanyards | 18 |
| - Carabiners | 28 |
| - Anchor solutions | 30 |
| - Self retracting lifelines | 32 |
| - Various equipment and sets | 34 |
| Head protection | 37 |
| Respiratory protection | 41 |
| Eye/face protection | 47 |
| Hearing protection | 53 |
| Hand protection | 57 |
| Corporate identity | 62 |
| Inspection | 63 |
| Training | 63 |

# EDGE

## SAFETY EQUIPMENT



Edge Safety Equipment biedt een uitgebalanceerd assortiment persoonlijke beschermings-middelen, waarbij veiligheid, comfort en ergono-mie voor de gebruiker centraal staan. Ons gamma omvat diverse artikelen voor val-beveiliging, oogbescherming, veiligheidshelmen, ademhalingsbescherming, gehoorbescherming en veiligheidshandschoenen.

Zowel in onze producten als in ons productie-proces zijn wij innovatief, met oog voor het milieu en het welzijn van onze werknemers.

Edge Safety Equipment propose une large gamme de produits de protection individuelle. Nos valeurs, que nous estimons primordiales, sont la sécurité, le confort et l'ergonomie de nos clients lors de l'utilisation de nos produits.

Notre gamme de produits contient des produits de protection anti-chute pour pratiquement toutes les applications imaginables, de la protection oculaire ainsi que des casques et de la protection respiratoire.

L'importance que nous accordons à nos valeurs, la sécurité, le confort et l'ergonomie nous donne la motivation de toujours être innovateurs. Tout en respectant l'environnement ainsi que le bienêtre de nos collaborateurs.

Edge Safety Equipment offers a balanced range of personal protective equipment. Safety, comfort and ergonomics for the user are essential for us.

Our range includes fall protection products, eye/face protection, safety helmets, respiratory protection, hearing protection and hand protection.

We are innovative in both our products and in our manufacturing process, with much attention for the environment and our employees.

EDGE

# SYMBOLEN



werkpositioneringsgordel
ceinture de positionnement
positioning belt



harnas met rugring
harnais avec anneau sur le dos
harness with back connection



harnas met borstring
harnais avec anneau sur le torse
harness with front connection



werkpositioneringsgordel
ceinture de positionnement
positioning belt



silo- en rioolwerkzaamheden
travaux silo et égouts
silo- and sewer work



abseil werkzaamheden
travail descente en rappel
abseil work



mastbeklimming
escalade des mâts
mast climbing



vrije tijd / klimsport
loisirs / l'escalade
leisure / climbing



redding
sauvetage
rescue



maatvoering S, M, L, XL, XXL en XXXL
tailles S, M, L, XL, XXL et XXXL
size S, M, L, XL, XXL and XXXL



industrie algemeen
industrie général
industry general



steigerbouw
échafaudage
scaffolding



telecom
télécom
telecom



windmolen
eoliennes
windmill



hoogspanning
haute tension
high voltage



staalbouw
construction acier
steel construction



bouwindustrie
industrie de la construction
construction industry



hoogtewerkers
installation de levage
inform work



dakdekkers
couvreurs
roofers



brandweer
pompiers
fire brigade



liftbouw
construction d'ascenseurs
elevator construction



service
service
service




EN 343 regenkleding
EN 343 vêtements imperméables
EN 343 rain clothing




EN 471 signalisatiekleding
EN 471 vêtements de signalisation
EN 471 hi visability clothing




EN 1149 antistatische kleding
EN 1149 vêtements antistatiques
EN 1149 antistatic clothing




EN ISO 11611 laskleding
EN ISO 11611 vêtements de soudage
EN ISO 11611 welding clothing




EN ISO 11612 hitte- en vlambescherming
EN ISO 11612 protec. contre flammes/chaleur
EN ISO 11612 heat and flame protection




EN ISO 14116 hitte- en vlambescherming
EN ISO 14116 protec. contre flammes/chaleur
EN ISO 14116 heat and flame protection




Teflon® coating
revêtement en Téflon®
Teflon® coating



vlamvertragend
ignifuge
flame retardant

# VALBEVEILIGING

## PROTECTION ANTICHUTE

## FALL PROTECTION











# ECONOMY

## EENVOUDIG, FUNCTIONEEL EN VEILIG

Ons Economy gamma biedt een goede pasvorm en eenvoudige instellingsmogelijkheden. De harnassen kenmerken zich door een opvallende kleurstelling, metaaldelen uit één stuk en een sterk bandenstel. Edge-harnassen hebben een eenvoudige opbouw met de volgende specifieke kenmerken:

- Edge 1: basis harnas voorzien van 1 D-ring en valindicator op de rugzijde
- Edge 2: algemeen harnas voorzien van 1 D-ring en valindicator op de rugzijde en 2 D-ringen op de borstzijde
- Rocky 1: harnas met geïntegreerde positioneringsgordel, voorzien van 1 D-ring en valindicator op de rugzijde, 2 D-ringen op de borstzijde en 2 D-ringen op de heupen

## SIMPLE, FONCTIONNEL ET SÉCURE

La gamme Economy fournit un bon ajustement et options de réglage facile. Les faisceaux sont caractérisés par des couleurs vives, des parties métalliques d'une seule pièce et des sangles fortes.  Les harnais ont une structure simple, avec les caractéristiques suivantes:

- Edge1: harnais de base avec 1 anneau en D et indicateur de chute au dos
- Edge 2: harnais général avec 1 anneau en D et indicateur de chute sur le dos et 2 anneaux en D sur le torse
- Rocky 1: harnais avec ceinture de positionnement intégrée, munie d'un anneau en D et indicateur de chute sur le dos, 2 anneaux en D sur le torse et 2 anneaux en D sur les hanches

## SIMPLE, FUNCTIONAL AND SAFE

The Economy range provides a good fit and easy adjustment options. The harnesses are characterized by a striking colour, metal parts in one piece and strong webbing. Edge harnesses have a simple structure with the following characteristics:

- Edge 1: basic harness with 1 D-ring and fall indicator on the back
- Edge 2: general harness with 1 D-ring and fall indicator on the back and 2 D-rings on the chest
- Rocky 1: harness with integrated positioning belt, provided with 1 D-ring and fall indicator on the back, 2 D-rings on the chest and 2 D-rings on the hips





EN 361

140 KG

EDGE

# ECONOMY

## EDGE 1



Art. no. EVH1D101

size M - XL

## EDGE 2



Art. no. EVH2D103

size M -XL

## EDGE ROCKY



Art. no. EVH4D104

size M -XL

# ECONOMY

## EENVOUDIG, FUNCTIONEEL EN VEILIG

Ons Economy gamma biedt een goede pasvorm en eenvoudige instellingsmogelijkheden. De harnassen kenmerken zich door een opvallende kleurstelling, metaaldelen uit één stuk en een sterk bandenstel. Edge-harnassen hebben een eenvoudige opbouw met de volgende specifieke kenmerken:

- Edge Dynamic 2 Easy On: vest-style harnas voorzien van 1 D-ring op de rugzijde, een (verlengde) D-ring, snelsluitingen en rugpadding.
- Edge Dynamic 2: algemeen harnas voorzien van 1 D-ring op de rugzijde en 2 D-ringen op de borstzijde
- Edge Dynamic 4: harnas met geïntegreerde positioneringsgordel, voorzien van 1 D-ring op de rugzijde, 2 D-ringen op de borstzijde en 2 D-ringen op de heupen

## SIMPLE, FONCTIONNEL ET SÉCURE

La gamme Economy fournit un bon ajustement et options de réglage facile. Les faisceaux sont caractérisés par des couleurs vives, des parties métalliques d'une seule pièce et des sangles fortes.  Les harnais ont une structure simple, avec les caractéristiques suivantes:

- Edge Dynamic 2 Easy On: harnais avec 1 anneau en D au dos et 1 (extendend) D-ring, des boucles en fermeture rapide.
- Edge Dynamic 2: harnais général avec 1 anneau en D sur le dos et 2 anneaux en D sur le torse
- Edge Dynamic 4: harnais avec ceinture de positionnement intégrée, munie d'un anneau en D sur le dos, 2 anneaux en D sur le torse et 2 anneaux en D sur les hanches

## SIMPLE, FUNCTIONAL AND SAFE

The Economy range provides a good fit and easy adjustment options. The harnesses are characterized by a striking colour, metal parts in one piece and strong webbing. Edge harnesses have a simple structure with the following characteristics:

- Edge Dynamic  2 Easy On: vest-style harness with 1 D-ring on the back, an (extended) D-ring, quick release buckles and back padding.
- Edge Dynamic 2: general harness with 1 D-ring on the back and 2 D-rings on the chest
- Edge Dynamic 4: harness with integrated positioning belt, provided with 1 D-ring on the back, 2 D-rings on the chest and 2 D-rings on the hips



EN 361

150 KG

# ECONOMY

## EDGE DYNAMIC 2 EASY ON



**1 D-ring extended, Backside**

Art. no. FP111003S-M | size S-M
Art. no. FP111003L-XL | size L-XL
Art. no. FP111003XXL-XXXL | size XXL-XXXL

**1 D-ring , Backside**

Art. no. FP111703S-M | size S-M
Art. no. FP111703L-XL | size L-XL
Art. no. FP111703XXL-XXXL | size XXL-XXXL

## EDGE DYNAMIC 2



Art. no. FP111002S-M | size S-M
Art. no. FP111002L-XL | size L-XL
Art. no. FP111002XXL-XXXL | size XXL-XXXL

## EDGE DYNAMIC 4



Art. no. FP111004S-M | size S-M
Art. no. FP111004L-XL | size L-XL
Art. no. FP111004XXL-XXXL | size XXL-XXXL

# EDGE COMFORT

## EENVOUDIG, COMFORTABEL EN VEILIG

De Edge Comfort harnassen kenmerken zich door veiligheid, comfort en eenvoud. Harnassen in deze klasse hebben een hoogwaardige opbouw en zijn, mede door de padding, zeer comfortabel in het gebruik en eenvoudig aan te trekken.

- Edge Enterprise Comfort: vest-style harnas voorzien van 1 D-ring met valindicator op de rugzijde (of extended D-ring), 2 D-ringen op de borstzijde en snel-sluit-gespen.
- Edge Endeavour Comfort: vest-style harnas voorzien van 1 D-ring met valindicator op de rugzijde, 2 D-ringen op de borstzijde, 2 D-ringen op de heupen en snel-sluit-gespen.
- Edge Vancouver Comfort: vest-style harnas voorzien van 1 D-ring op de rugzijde, 1 D-ring op de borstzijde, 2 D-ringen op de heupen en snel-sluit-gespen.

## SIMPLE, CONFORTABLE ET SÉCURE

Les harnais Edge Comfort sont caractérisés par la sécurité, le comfort et la simplicité. Harnais de cette classe ont une structure plus complexe, ce qui vous donne plus de comfort et ce qui sont très facile à mettre.

- Edge Enterprise Comfort: 1 anneau en D et indicateur de chute sur le dos (ou extendend D-ring) et 2 anneaux en D sur le torse avec des boucles en fermeture rapide.
- Edge Endeavour Comfort: 1 anneau en D et indicateur de chute sur le dos et 2 anneaux en D sur le hanches, avec des boucles en fermeture rapide.
- Edge Vancouver Comfort: 1 anneau en D sur le dos et 2 anneaux en D sur le hanches, avec des boucles en fermeture rapide.

## SIMPLE, COMFORTABLE AND SAFE

The Edge Comfort harnesses provide a good fit and easy adjustment options. The harnesses are a high quality and, due to additional padding, very comfortable to use and easy to put on.

- Edge Enterprise Comfort: vest-style harness with quick release buckles, 1 D-ring and fall indicator on the back (or extended D-ring) and 1 D-ring on the chest.
- Edge Endeavour Comfort: vest-style harness with quick release buckles, 1 D-ring and fall indicator on the back, 2 D-ringd on the chest and 2 D-rings on the hips.
- Edge Vancouver Comfort: vest-style harness with quick release buckles, 1 D-ring on the back, 1 D-ring on the chest and 2 D-rings on the hips.

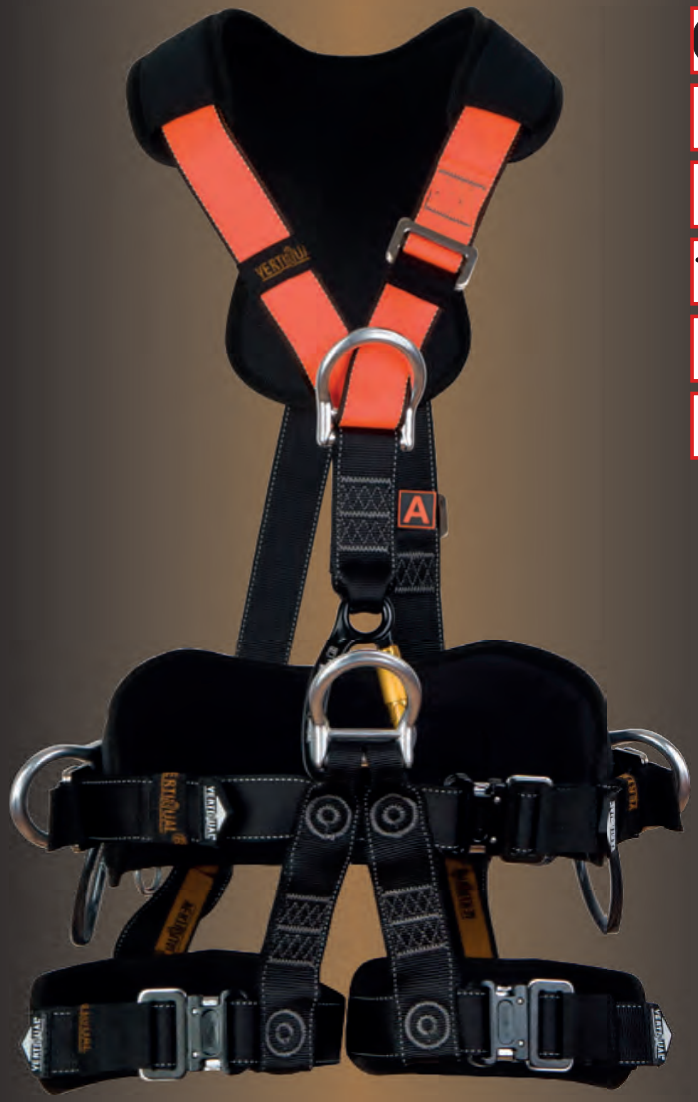


EDGE

# EDGE COMFORT

## EDGE ENTERPRISE COMFORT




Art. no. EH1120030, size S-M
Art. no. EH1120031, size L-XL
Art. no. EH1120031ED, size L-XL (ED)
Art. no. EH1120032, size XXL-XXXL
Art. no. EH1120032ED, size XXL - XXXL (ED)

## EGDE ENDEAVOUR COMFORT



Art. no. EH1220050, size S-M
Art. no. EH1220051, size L-XL
Art. no. EH1220052, size XXL-XXXL

## EDGE VENCOUVER COMFORT



Art. no. EH1420080, size S-M
Art. no. EH1420081, size L-XL
Art. no. EH1420082, size XXL-XXXL

# EDGE PREMIUM

## EENVOUDIG, FUNCTIONEEL EN VEILIG

De Edge Premium harnassen kenmerken zich door veiligheid, comfort en eenvoud. Harnassen in deze klasse hebben een hoogwaardige opbouw en zijn, mede door de padding, zeer comfortabel in het gebruik en eenvoudig aan te trekken.

- Edge Toronto: premium vest-style harnas voorzien van 1 D-ring met valindicator op de rugzijde, 1 D-ring op de borstzijde en snel-sluit-gespen.
- Edge Montreal: premium vest-style harnas voorzien van 1 D-ring met valindicator op de rugzijde, 1 D-ring op de borstzijde, 2 D-ringen op de heupen en snel-sluit-gespen.
- Edge Vancouver: premium vest-style harnas voorzien van 1 D-ring met valindicator op de rugzijde, 1 D-ring op de borstzijde, 2 D-ringen op de heupen en snel-sluit-gespen.

## SIMPLE, FONCTIONNEL ET SÉCURE

Les harnais Edge Premium sont caractérisés par la sécurité, le comfort et la simplicité. Harnais de cette classe ont une structure plus complexe, ce qui vous donne plus de comfort et ce qui sont très facile à mettre.

- Edge Toronto: 1 anneau en D et indicateur de chute sur le dos et 1 anneau en D sur le torse avec des boucles en fermeture rapide.
- Edge Montreal: 1 anneau en D et indicateur de chute sur le dos et 2 anneaux en D sur le hanches, avec des boucles en fermeture rapide.
- Edge Vancouver: 1 anneau en D et indicateur de chute sur le dos et 2 anneaux en D sur le hanches, avec des boucles en fermeture rapide.

## SIMPLE, FUNCTIONAL AND SAFE

The Edge Premium harnesses provide a good fit and easy adjustment options. The harnesses are a high quality and, due to additional padding, very comfortable to use and easy to put on.

- Edge Toronto: premium vest-style harness with quick release buckles, 1 D-ring and fall indicator on the back and 1 D-ring on the chest.
- Edge Montreal: premium vest-style harness with quick release buckles, 1 D-ring and fall indicator on the back, 1 D-ring on the chest and 2 D-rings on the hips.
- Edge Vancouver: premium vest-style harness with quick release buckles, 1 D-ring and fall indicator on the back, 1 D-ring on the chest and 2 D-rings on the hips.




EDGE

# EDGE PREMIUM

## EDGE TORONTO



Art. no. FP111244S-M, size S-M
Art. no. FP111244L-XL, size L-XL
Art. no. FP111244XXL-XXXL, size XXL-XXXL
With leg padding:
Art. no. FP111233S-M, size S-M
Art. no. FP111233L-XL, size L-XL
Art. no. FP111233XXL-XXXL, size XXL-XXXL

## EDGE MONTREAL



Art. no. FP112253S-M, size S-M
Art. no. FP112253L-XL, size L-XL
Art. no. FP112253XXL-XXXL, size XXL-XXXL

## EDGE VANCOUVER



Art. no. FP113208S-M, size S-M
Art. no. FP113208L-XL, size L-XL
Art. no. FP113208XXL-XXXL, size XXL-XXXL

# VLAMVERTRAGENDE HARNASSEN EN VESTEN

## VLAMVERTRAGENDE HARNASSEN EN VESTEN

Edge biedt een reeks harnassen en vesten met vlamvertragende (FR) en antistatische (AST) eigenschappen. De vertrouwde bescherming voor werken op hoogte, gebruiksgemak en zichtbaarheid worden gecombineerd met bescherming van het harnas tegen hitte en/of vuur.

De Intellivesten zijn in combinatie met de harnassen Heatcruiser en Chemistry te bestellen. De harnassen kunnen ook afzonderlijk worden besteld.

Wanneer vlamvertragende en anti-statische eigenschappen vereist zijn, let dan ook op de juiste keuze van verbindingsmiddelen.

## HARNAIS ET GILETS FLAMME RETARDANTE

Edge vous offre un nombre d'harnais et gilets flame-retardante (FR) et anti-statique (AST). La protection bien sécurisante pour les travaux à hauteur, utilisation facile et bonne visibilité ont été consolidées avec une protection thermale contre la chaleur/ou le feu .

Les gilets Intelli doivent être commandés en combinaison avec le harnais Heatcruiser ou Chemistry. Par contre, les harnais peuvent ëtre commandés individuellement.

Quand spécifications comme flame-retardante et  anti-statisque sont requises, faites également attention aux moyens de raccordement.

## FLAME RETARDANT HARNESSES AND JACKETS

Edge offers a range of harnesses and vests with flame retardant (FR) and anti-static (AST) prperties. The well known protection for working at height, comfort and visibility are combined with the protection of the harness against heat and/or fire.

The Intellivests must be ordered in combination with either the Heatcruiser or Chemistry harness. The harnesses can also be ordered separately.

When flame retardant and anti-static properties are required, also select the correct connecting devices.



# VLAMVERTRAGENDE HARNASSEN EN VESTEN

## EDGE HEATCRUISER FR



Art. no. EH1510100, size S-M
Art. no. EH1510101, size L-XL
Art. no. EH1510102, size XXL-XXXL

## EDGE CHEMISTRY FR + AST



Art. no. EH1150030, size S-M
Art. no. EH1150031, size L-XL
Art. no. EH1150032, size XXL-XXXL

## EDGE INTELLIVEST FR



Art. no. EV6055113, size S-M
Art. no. EV6055114, size L-XL
Art. no. EV6055115, size XXL-XXXL

## EDGE INTELLIVEST FR + AST



Art. no. EV6055223, size S-M
Art. no. EV6055224, size L-XL
Art. no. EV6055225, size XXL-XXXL

# SPECIALE HARNASSEN

## EDGE HIGHLIGHT BASIC AUTOMATIC (inclusief harnas)



Art. no. EH1121123, size S-M
Art. no. EH1121124, size L-XL
Art. no. EH1121125, size XXL-XXXL

## EDGE HIGHLIGHT BASIC AUTOMATIC (inclusief harnas)



Art. no. EH1121126, size S-M
Art. no. EH1121127, size L-XL
Art. no. EH1121128, size XXL-XXXL

## EDGE OFFSHORE Solas



Art. no. EH1250530, size S-M
Art. no. EH1250531, size L-XL
Art. no. EH1250532, size XXL-XXXL

## HARNASSEN T.B.V. DE STEIGERBOUW

De **Edge Dynamic 2 Scaffolding** is een comfortabel harnas voorzien van schouderpads op beide schouders. Het harnas is voorzien van klassieke sluitingen.
De **Edge Toronto Scaffolding** is een premium vest-style harnas met schouderpads op beide schouders. Het harnas is voorzien van snelsluitingen.

## HARNAIS POUR L'ÉCHAFAUDAGE

L'**Edge Dynamic 2 Scaffolding** est uun harnais confortable avec protection d'épaule sur les deux épaules. Le harnais a des fermetures classiques.
Le **Edge Toronto Scaffolding** est un harnais de style gilet de qualité supérieure avec protection d'épaule sur les deux épaules. Le harnais est équipé de fermetures rapides.

## SCAFFOLDING HARNESSES

The **Edge Dynamic 2 Scaffolding** is a comfortable harness with shoulder pads on both shoulders. The harness has classic closures.
The **Edge Toronto Scaffolding** is a premium vest-style harness with shoulder pads on both shoulders. The harness is equipped with quick-release buckles.

### EDGE DYNAMIC 2 SCAFFOLDING



**Art. no. FP111003.SP.S-M, size S-M**
**Art. no. FP111003.SP.L-XL, size L-XL**
**Art. no. FP111003.SP.XXL-XXXL, size XXL-XXXL**

### EDGE TORONTO SCAFFOLDING



**Art. no. FP111244S-M.SP, size S-M**
**Art. no. FP111244L-XL.SP, size L-XL**
**Art. no. FP111244XXL-XXXL.SP, size XXL-XXXL**

# POSITIONERINGSLIJNEN

## POSITIONERINGSLIJNEN
Edge positioneringslijnen zijn samengesteld uit hoogwaardige materialen. De kernmantellijn is gemaakt van polyamide en voorzien van een stalen musketonhaak en/of aluminium steigerhaak.





## LIGNES DE POSITIONNEMENT
Les lignes de positionnement Edge sont composées en matériaux de haute qualité. La ligne de base du manteau est en polyamide et ets équipé d'un mousqueton en acier et/ou crochet échafaudage en aluminium.





## POSITIONING LANYARD
Edge positioning lines are composed of high quality materials. The core mantle line is made of polyamide and has a steel snap hook and/or aluminium scaffold hook.

# POSITIONERINGSLIJNEN

## EDGE FOX 1



Art. no. EL1SH10, 1 m

EN 354

## EDGE FOX 2



Art. no. EL1AH10, 1 m
Art. no. EL1AH10.1,5, 1,5 m

EN 354

## EDGE FOX 2 (2m)



Art. no. EL1AH10.2, 2 m

EN 354

## EDGE VANGLIJN



Art. no. EKM2110010, 10 m
Art. no. EKM2110020, 20 m
Art. no. EKM2110030, 30 m

EN 358

## EDGE FAST 103C14



Art. no. EL2112272, 2,0 m

EN 358

# ECONOMY VEILIGHEIDSLIJNEN MET VALDEMPER

## ECONOMY VEILIGHEIDSLIJNEN MET VALDEMPER

Deze veiligheidslijnen zijn voorzien van een valdemper, welke de kracht van de val absorbeert en daardoor een letselbeperkende werking heeft.

- Edge Viper: polyamide kernmantellijn, stalen musketonhaak en stalen steigerhaak
- Edge Maverick: elastische veiligheidslijn met geïntegreerde valdemper en stalen steigerhaak
- Edge Delta 1: elastische webbing, stalen musketonhaak en stalen steigerhaak
- Edge Delta 2: elastische Y-webbing, stalen musketonhaak en stalen steigerhaken

## ECONOMY LIGNES DE SÉCURITÉ AVEC ABSORBEUR DE CHOC

Cettes lignes de sécurité sont fournis avec un absorbeur de choc qui absorbe la force de la chute ce qui a un effet restrictif des blessures.

- Edge Viper: ligne de base du manteau en polyamide. Mousqueton en acier et crochet échafaudage en acier.
- Edge Maverick: ligne de sécurité élastique, avec un absorbeur de choc integré et un crochet échafaudage en acier.
- Edge Delta 1: sangle en élastique, mousqueton en acier et crochet échafaudage en acier.
- Edge Delta 2: Y-sangle en élastique, mousqueton en acier et crochet échafaudage en acier.

## ECONOMY SAFETY LINES WITH SHOCK ABSORBER

These safety lines are provided with a shock absorber, which absorbs the force of the fall and thereby has an injury restrictive effect.

- Edge Viper: polyamide core mantle line, steel snap hook and steel scaffold hook
- Edge Maverick: elastic lanyard, integrated shock absorber and steel scaffold hook
- Edge Delta 1: elastic webbing, steel snap hook and steel scaffold hook
- Edge Delta 2: elastic Y-webbing, steel snap hook and steel scaffold hooks



# ECONOMY VEILIGHEIDSLIJNEN MET VALDEMPER

## EDGE VIPER



Art. no. ELVD1KH1AH20, 2 m
Art. no. ELVD1KH1AH1.5, 1,5 m

EN 354 + EN 355

## EDGE MAVERICK



Art. no. EL2205052
2 m (022+426)

EN 354 + EN 355

## EDGE DELTA 1



Art. no. ELVDW1KH1AH20, 2 m
Art. no. ELVDW1KH1AH201.5, 1,5 m

EN 354 + EN 355

## EDGE DELTA 2



Art. no. ELVDDW2AH20, 2 m
Art. no. ELVDDW2AH201.5, 1,5 m

EN 354 + EN 355

# PREMIUM VEILIGHEIDSLIJNEN MET VALDEMPER

## EDGE LIZARD & EDGE GEKKO

### PREMIUM VEILIGHEIDSLIJNEN MET VALDEMPER

Deze veiligheidslijnen zijn voorzien van een valdemper, welke de kracht van de val absorbeert en daardoor een letselbeperkende werking heeft.

- Edge Lizard: polyamide kernmantellijn, stalen veiligheidshaak en aluminium steigerhaak
- Edge Lizard Vario: idem Edge Lizard, echter met instelbare lijn-lengte
- Edge Gekko: polyamide Y-kernmantellijn, stalen veiligheidshaak en aluminium steigerhaken
- Edge Gekko Vario: idem Edge Gekko, echter met instelbare lijn-lengte

(Naar keuze zijn andere haak-combinaties mogelijk.)

### PREMIUM LIGNES DE SÉCURITÉ AVEC ABSORBEUR DE CHOC

Cettes lignes de sécurité sont fournies avec un absorbeur de choc qui absorbe la force de la chute ce qui a un effet restrictif des blessures.

- Edge Lizard: ligne de base du manteau en polyamide. Mousqueton en acier et crochet échafaudage en aluminium.
- Edge Lizard Vario: même que le Edge Lizard, mais avec une longueur réglable
- Edge Gekko: ligne de base du manteau en polyamide Y, crochet de sécurité en acier et crochet échafaudage en aluminium.
- Edge Gekko Vario: même que le Edge Gekko, mais avec une longueur réglable (Autres combinaisons de crochets sont possibles)

### PREMIUM SAFETY LINES WITH SHOCK ABSORBER

These safety lines are provided with a shock absorber, which absorbs the force of the fall and thereby has an injury restrictive effect.

- Edge Lizard: polyamide core mantle line, steel and aluminium scaffolding carabiner hook
- EdgeLizard Vario: same as Edge Lizard, but with adjustable line length
- Edge Gekko: polyamide core mantle Y-line, steel and aluminium scaffold carabiner hooks
- Edge Gekko Vario: same as Edge Gekko, but with adjustable line length

(Other hook combinations are possible.)



# PREMIUM VEILIGHEIDSLIJNEN MET VALDEMPER

## EDGE LIZARD



Art. no. EL22 0205 4
2 m (022+426)

EN 354 + EN 355

## EDGE LIZARD VARIO



Art. no. EL22 1205 4
2 m (022+426)

EN 354 + EN 355

## EDGE GEKKO



Art. no. EL22 0206 3
2 m (022+426+426)

EN 354 + EN 355

## EDGE GEKKO VARIO



Art. no. EL22 1206 3
2 m (022+426+426)

EN 354 + EN 355

# ELASTISCHE VEILIGHEIDSLIJNEN MET VALDEMPER

## EDGE IGUANA & EDGE VARAN

### ELASTISCHE VEILIGHEIDSLIJNEN MET VALDEMPER

Ter bevordering van het gebruiksgemak zijn deze veiligheidslijnen elastisch. Tevens zijn zij voorzien van een valdemper, welke de kracht van de val absorbeert en daardoor een letselbeperkende werking heeft.

- Edge Iguana: elastische veiligheidslijn, stalen veiligheidshaak en aluminium steigerhaak
- Edge Maverick: elastische veiligheidslijn met geïntegreerde valdemper en stalen steigerhaak
- Edge Varan: elastische Y-veiligheidslijn, stalen veiligheidshaak en aluminium steigerhaken
- Edge Varan RS: idem Edge Varan, echter voorzien van polsbanden

(Naar keuze zijn andere haak-combinaties mogelijk.)

### LIGNES ÉLASTIQUES DE SÉCURITÉ AVEC ABSORBEUR DE CHOC

Afin d'augmenter la facilité d'utilisation cettes lignes sont en élastique. Elles sont également fournies avec un absorbeur de choc qui absorbe la force de la chute ce qui a un effet restrictif des blessures.

- Edge Iguana: ligne de sécurité élastique, crochet de sécurité en acier et crochet échafaudage en aluminium.
- Edge Maverick: ligne de sécurité élastique, avec un absorbeur de choc integré et un crochet échafaudage en acier.
- Edge Varan: ligne de sécurité élastique Y, crochet de sécurité en acier et crochet échafaudage en aluminium.
- Edge Varan RS: même que le Edge Varan, mais avec bracelet

(Autres combinaisons de crochets sont possibles)

### SAFETY LINES WITH SHOCK ABSORBER

In order to increase the ease of use, these lifelines are elastic. They are also provided with a shock absorber, which absorbs the force of the fall and thereby has an injury restrictive effect.

- Edge Iguana: elastic lanyard, steel safety hook and aluminium scaffold hook
- Edge Maverick: elastic lanyard, integrated shock absorber and steel scaffold hook
- Edge Varan: elastic Y-lanyard, steel safety hook and aluminium scaffold hooks
- Edge Varan RS: same as Edge Varan, but with wristbands

(Other hook combinations are possible.)



# ELASTISCHE VEILIGHEIDSLIJNEN MET VALDEMPER

## EDGE IGUANA



Art. no. EL2203054
2 m (022+426)

EN 354 + EN 355

## EDGE MAVERICK



Art. no. EL2205052
2 m (022+426)

EN 354 + EN 355

## EDGE VARAN



Art. no. EL2203063
2 m (022+426+426)

EN 354 + EN 355

## EDGE VARAN-RS



Art. no. EL2213063
2 m (022+426+426)

EN 354 + EN 355

# VANGLIJNEN MET MEELOPENDE LIJNKLEM

## VANGLIJNEN MET MEELOPENDE LIJNKLEM

De Edge Vertiline-reeks biedt de oplossing voor verticale werkzaamheden op hoogte. De meelopende lijnklem zorgt voor een veilige werksituatie op variërende hoogten.

- Edge Vertiline Basic: kernmantellijn 12 mm met niet-verwijderbare lijnklem, valdemper en stalen veiligheidshaken
- Edge Vertiline Universal: geslagen 14 mm lijn met verwijderbare lijnklem, valdemper en twee veiligheidshaken

(Op verzoek zijn andere lengtes verkrijgbaar.)

## LIGNES DE SÉCURITÉ AVEC PINCES VARIABLES

La gamme Edge Vertiline fournit la solution pour des travaux verticaux à hauteur. Les pinces variables assurent un environnement de travail en sécurité à différentes hauteurs.

- Edge Vertiline Basic: ligne de base du manteau 12 mm avec pince inamovible, absorbeur et crochet de sécurité en acier.
- Edge Vertiline Universal: Ligne battu 14 mm avec pince amovible, absorbeur et deux crochets de sécurité.

(Autres longueurs disponibles sur simple demande.)

## LANYARD WITH LINE CLAMP

The Edge Vertiline series provides the solution for vertical work at height. The line clamp ensures a safe working environment at varying heights.

- Edge Vertiline Basic: core mantle line 12 mm,  non-removable line clamp, shock absorber and steel safety hooks
- Edge Vertiline Universal: 14 mm rope with removable line clamp, shock absorber and two safety hooks

(Other lengths are available on request.)



# VANGLIJNEN MET MEELOPENDE LIJNKLEM

## EDGE VERTILINE BASIC



Art. no. EL2321810, 10 m (022+022)
Art. no. EL2321820, 20 m (022+022)

EN 353:2

## EDGE VERTILINE BASIC



Art. no. EL2321830, 30 m (022+022)
Art. no. EL2321840, 40 m (022+022)

EN 353:2

## EDGE VERTILINE UNIVERSAL



Art. no. EL2321610, 10 m (230+227)
Art. no. EL2321620, 20 m (230+227)

EN 353:2

## EDGE VERTILINE UNIVERSAL



Art. no. EL2321630, 30 m (230+227)
Art. no. EL2321640, 40 m (230+227)

EN 353:2

# HAKEN

## HAKEN
Edge biedt een uitgebalanceerd gamma haken voor een grote diversiteit aan toepassingen. Voor de juiste keuze is zowel het materiaal als de grootte van de haak-opening van belang.

## MOUSQUETONS
Edge offre une gamme équilibrée pour une variété d'applications. Pour bien choisir l'importance du choix du materiel et la taille de l'ouverture de chrochet est primordial.

## CARABINERS
Edge offers a balanced range of carabiners for a wide variety of applications. Evident for making the right choice are both the material and size of the hook-opening.




### FUJI-SAN
**Art. no. EH3201260**



Aluminium
↔ > 22 kN
61 mm
480 g
Norm:
EN 362/2004/A

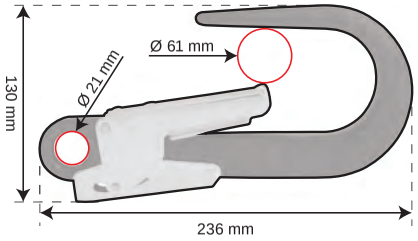


### TEIDE
**Art. no. EH3301220**



Staal
↔ > 22 kN
17 mm
225 g
Norm:
EN 362/2004/T

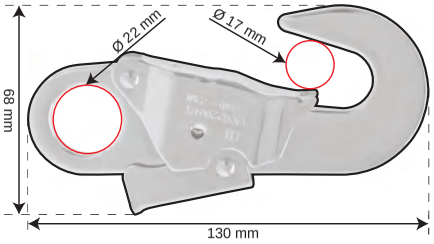

# HAKEN

## ANNAPURNA

**Art. no. EH3302230**



Staal
↔ > 25 kN
18 mm
156 g
Norm:
EN 362/2004/B

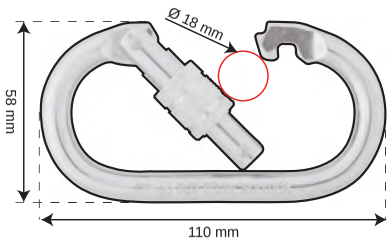


## SANTIS

**Art. no. EH3103240**



Aluminium
↔ > 36 kN
23 mm
97 g
Norm:
EN 362/2004/B

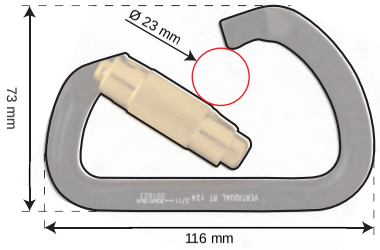


## BROOKS

**Art. no. EH3300260**



Staal
↔ > 23 kN
56 mm
480 g
Norm:
EN 362/2004/A

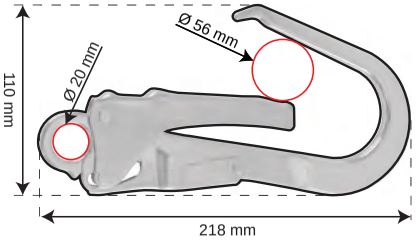


## OLYMPUS 1, 2, 3

**Art. no. EM32221x**



Staal
↔ > 22 kN
**1:** 80 mm
308 g

**2:** 110 mm
356 g

**3:** 140 mm
376 g

Norm:
EN 362/2004/T

## KNEIFF

**Art. no. EM322220**



Aluminium
↔ > 22 kN
61 mm

Norm:
EN 362/2004/A

incl. al. lifting pole
max 6 m

## LE ROCHER/FORTUNA

**Art. no. EH4300201**

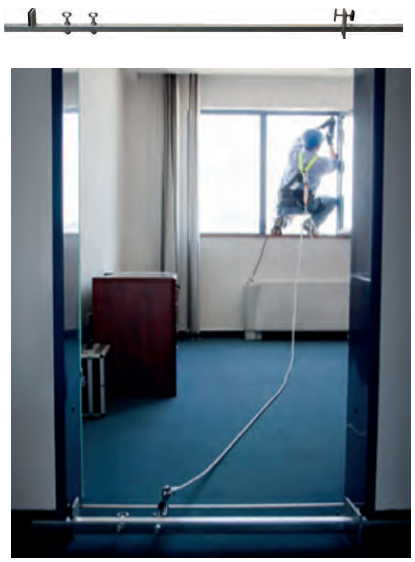

Deuranker
(Ancre de porte)
(Door anchor)

35 cm - 124 cm

Staal
↔ > 22 kN

Norm:
EN 795

# ANKERMIDDELEN

## ANKERMIDDELEN
Edge biedt met diverse ankermiddelen een oplossing voor tijdelijke en permanente verankering tijdens hoogte en diepte werkzaamheden.

## DES MOYENS D'ANCRAGE
Edge offre des moyens d'ancrage pour l'ancrage temporaire et permanente pour travailler à hauteur et la profondeur.

## ANCHOR SOLUTIONS
Edge offers several anchor solutions, for both temporary and permanent anchorage during work at height and depth.



EDGE

## EDGE SLINGS ↔ >30 kN

24 mm PES band



**Art. no. ES2430006**
l 60 cm, O 120 cm

**Art. no. ES2430008**
l 80 cm, O 160 cm

**Art. no ES2430010**
l 100 cm, O 200 cm

**Art. no. ES2430012**
l 120 cm, O 240 cm

**Art. no ES2430016**
l 160 cm, O 320 cm

**Art. no. ES2430020**
l 200 cm, O 400 cm

EN354 + EN566 + EN795

## EDGE RAINBOW

**Art. no. EL4310015**



Tijdelijke horizontale verankeringslijn 20 m

max 3 personen

↔ > 22 kN
17 mm
225 g

Norm:
EN 362/2004/T

# ANKERMIDDELEN

## EDGE DRIEPOOT-SET

**Art. no. ES4311111**



Norm:
EN 795

## MYRA

**Art. no. EA4300202**



Aluminium
↔ 1 pers.

Norm:
EN 795

## GLACIER

**Art. no. EA4310010**



Staal
loopcat tbv H-profiel
65 - 120 mm

Norm:
EN 795

## BIGHORN

**Art. no. EA800005**



Staal
↔ max 3 pers.
40 cm

Norm:
EN 795

## MAUI

**Art. no. EA4300203**



Staal
↔ 1 pers.
M19 fastner

Norm:
EN 795

## YUKON

**Art. no. EA4310012**



Aluminium
glijdende balkenklem
tbv H-profiel
95 - 400 mm

Norm:
EN 795

# VALSTOPBLOKKEN

## EDGE KINETIX

De Edge Kinetix-valstopblokken hebben 2,5 m band, valdemper en draaibare veiligheidshaak. Naar wens is de steigerhaak te vervangen door een musketonhaak.

Les blocs antichute Edge Kinetix ont 2,5 m de bande, l'absorbeur et crochet de sécurité pivotant. Sur demande il est possible de remplacer le crochet d'échafaudage par un mousqueton.

The Edge Kinetix self-retracting lifelines have a 2.5 m webbing, shock absorber and swivel safety hook. On request the scaffold hook can be replaced by a snap hook.

## EDGE 102W/203W/206W

De Edge blokken hebben een Dyneema-band (2 m, 3,4 m of 6 m), aluminium/kunststof behuizing en draaibaar bevestigingspunt.

Les blocs Edge ont une sangle de Dyneema (2 m, 3,4 m ou 6 m), boîtier en aluminium/plastique et point d'attachement pivotant.

The Edge blocks have a Dyneema webbing (2 m, 3,4 m or 6 m), aluminium/plastic housing and swivel attachment point.

### EDGE KINETIX




**Art. no. EB4007072**
**band 2,5 m**

**EN 360**

### EDGE 102W (2 m)




**Art. no. FP1-CE-102WD Teide haak**
**Art. no. FP1-CE-102WE Fuji San haak**
**Art. no. FP1-CE-102WF Brooks haak**

**EN 360**

### EDGE 203W (3,4 m)




**Art. no. FP2-CE-203WD Teide haak**
**Art. no. FP2-CE-203WE Fuji San haak**
**Art. no. FP2-CE-203WF Brooks haak**

**EN 360**

# VALSTOPBLOKKEN

## EDGE 206W (6 m)




**Art. no. FP2-CE-206WD**

**EN 360**

## EDGE 1010 / 1015 / 1020 / 1025 / 1030






| | |
|---|---|
| **Art. no. EGBLK1010G** | **10 m** |
| **Art. no. EGBLK1015G** | **15 m** |
| **Art. no. EGBLK1020G** | **20 m** |
| **Art. no. EGBLK1025S** | **25 m** |
| **Art. no. EGBLK1030S** | **30 m** |

## EDGE UPGRADE - TWIN SRL



**Ook verkrijgbaar met aluminium steigerhaken.**



**Art. no. FP1570909920 staal**
**Art. no. FP157090992003 aluminium**

**EN 360**

**EDGE 1010/1015/1020/1025/1030**
De Dynamic valstopblokken van deze lijn hebben een gegalvaniseerde staalkabel van 4,5 mm dikte en een kunststof behuizing. Lengtes verkrijgbaar van 10 m t/m 30 m.

Ces blocs antichute Dynamic ont un câble en acier galvanisé d'un diamètre de 4,5 mm et un boîtier en plastique. Longueurs de 10 m jusqu'à 30 m.

These Dynamic self-retracting lifelines have a galvanized steel wire of 4.5 mm thickness and a plastic housing. Lengths of 10 m up to 30 m.

**EDGE UPGRADE - TWIN SRL**
De Edge Upgrade is een twin-srl, het ideale lichtgewicht (2,05 kg) valtoestel voor de steigerbouw. Leverbaar met stalen of aluminium steigerhaken.

L'Edge Upgrade est une twin-srl, un bloc antichute léger (2,05 kg), idéal pour la construction des chafaudages. Disponible avec des crochets d'échafaudage en acier ou en aluminium.

The Edge Upgrade is a twin-srl, the ideal lightweight (2.05 kg) self-retractable device for scaffolding. Available with steel or aluminum scaffolding hooks.

# DIVERSEN




**Art. no. ER5056100**
**Backpack small**
**ca. 36 x 28 x 10 (10 l.)**




**Art. no. ER5056000**
**Backpack medium**
**ca. 78 x 42 (21 l.)**



**Art. no. ER5056200**
**Transportbag large**
**ca. 97 x 62 (45 l.)**




**Art. no. EB201201**
**Edge box**
**40 x 30 x 24**




**Art. no. ET5054000**
**Anti-Trauma Strap**










# SETS

## EDGE HOOGTEWERKERSET






Art. no. FP1607

EDGE 1
+
EDGE FOX 2 - 1,5 m
+
EDGE BOX

## EDGE BASIC STEIGERSET






Art. no. ECD1970

EDGE 2
+
EDGE VIPER 2 m
+
EDGE BOX

## EDGE SCHUINEDAKENSET






Art. no. FP1111

ROCKY
+
EDGE VERTILINE UNIVERSAL 20m
+
SLING 80cm + ANNA PURNA + EDGE BOX

## EDGE PROFSET 2m






Art. no. ESLC1975
EDGE 2
+
EDGE 102WF
+
EDGE BOX

Andere setconfiguraties mogelijk
D'autres configurations sont disponibles
Other sets are possible

# VEILIGHEIDSHELMEN

## CASQUES DE SÉCURITÉ

## HEAD PROTECTION







# VEILIGHEIDSHELMEN

## FUNCTIONEEL EN VEILIG

De veiligheidshelmen uit ons gamma bieden een goede pasvorm en eenvoudige instellingsmogelijkheden. De helmen zijn leverbaar in diverse utvoeringen en kleuren.

- Edge Dynamic Whistler: HDPE helmschaal, 4-punts textiel binnenwerk en draaiknop
- Edge Dynamic Whistler Economy: HDPE helmschaal, kunststof binnenwerk, schuifverstelling
- Edge Dynamic Whistler Textile Pin Lock: HDPE helmschaal, 4-punts tectiel binnenwerk, schuifverstelling
- Edge Dynamic Logan: HDPE helmschaal, korte klep, 4-punts textiel binnenwerk en draaiknop

## SIMPLE, FONCTIONEL ET SÛR

Notres casques fournissent un bon ajustement et options de réglage facile. Les casques sont disponible en différents modèles et couleurs.

- Edge Dynamic Whistler: HDPE coque du casque avec 4-point tergal et le bouton
- Edge Dynamic Whistler Economy: HDPE coque du casque avec fermature intérieur en plastique et glissière
- Edge Dynamic Whistler Textile Pin lock: HDPE coque du casque avec fermature intérieur en textile et glissière
- Edge Dynamic Logan: HDPE coque de casque, un court soupapes, 4-point tergal et le bouton

## SIMPLE, FUNTIONAL AND SAFE

Our safety helmets provide a good fit and easy adjustment options. The safety helmets are available in various types and colours.

- Edge Dynamic Whistler: HDPE shell provided with a 4-points textile harness and ratchet
- Edge Dynamic Whistler Economy: HDPE shell with plastic suspension pin lock
- Edge Dynamic Whistler Textile Pin lock: HDPE shell with textile suspension and pin lock
- Edge Dynamic Logan: HDPE shell, short peak, provided with a 4-points textile harness and ratchet



# VEILIGHEIDSHELMEN

## EDGE DYNAMIC WHISTLER



**RATCHET:**

Art. no. HP241R/01
Art. no. HP241R/02
Art. no. HP241R/18
Art. no. HP241R/17
Art. no. HP241R/15
Art. no. HP241R/04
Art. no. HP241R/20
Art. no. HP241R/11
Art. no. HP241R/09

**ECONOMY:**

Art. no. HP221/01
Art. no. HP221/02
Art. no. HP221/18
Art. no. HP221/17
Art. no. HP221/15
Art. no. HP221/04
Art. no. HP221/20
Art. no. HP221/11
Art. no. HP221/09

## EDGE DYNAMIC WHISTLER



**TEXTILE PIN LOCK:**

Art. no. HP241/01
Art. no. HP24/02
Art. no. HP241/18
Art. no. HP241/17
Art. no. HP241/15
Art. no. HP241/04
Art. no. HP241/20
Art. no. HP241/11
Art. no. HP241/09

## EDGE DYNAMIC LOGAN



**RATCHET:**

Art. no. HP1141RSP/01
Art. no. HP1141RSP/02
Art. no. HP1141RSP/18
Art. no. HP1141RSP/17
Art. no. HP1141RSP/15
Art. no. HP1141RSP/04
Art. no. HP1141RSP/20
Art. no. HP1141RSP/11
Art. no. HP1141RSP/09

# ADEMHALINGSBESCHERMING

## PROTECTION RESPIRATOIRE

## RESPIRATORY PROTECTION













EDGE

# DISPOSABLE STOFMASKERS

## DISPOSABLE STOFMASKERS

De disposable-reeks biedt bescherming aan de luchtwegen tijdens het werken in een stoffige omgeving. De reeks bevat een serie cupmaskers en plooimaskers in de klasse FFP2, FFP2V en FFP3V. De plooimaskers zijn per stuk verpakt.




## MASQUES JETABLES

Les masques jetables vous assurent d'une protection des voies respiratoires dans les environnements poussièreux. La série contient le respirateur à demi-masque, le respirateur à masque-souple, classe FFP2, FFP2V, FFP3V. Les masques souples sont emballés de façon individuelle.




## DISPOSABLE DUSTMASKS

The disposable series provides respiratory protection for working in dusty areas. The series contains cup masks and foldable masks, class FFP2, FFP2V and FFP3V. The foldable masks are individually wrapped.

# DISPOSABLE STOFMASKERS

## EDGE FIT TEST — Art. no. EFTK500100



## EDGE FOLD FLAT — Art. no. RP723V

FFP2V




## EDGE FOLD FLAT — Art. no. RP724V

FFP3V




## EDGE CUP — Art. no. RP820

FFP2




## EDGE CUP — Art. no. RP820V

FFP2V




## EDGE CUP — Art. no. RP930V

FFP3V




EDGE

# ADEMHALINGSBESCHERMING KLASSE 1 EN 2

## VEILIG EN COMFORTABEL

Ter bescherming van de luchtwegen biedt Edge maskers en filters in klasse 1 en 2.
De comfortabele maskers zijn gefabriceerd uit hoogwaardig rubber en silicone.
De filters in klasse 1 en 2 zijn verkrijgbaar in de volgende uitvoeringen:

- A = organische gassen en dampen met een kookpunt > 65°C
- AP3 = organische gassen en dampen in combinatie met fijnstof (giftig)
- ABEK = organische en anorganische gassen en dampen, zwaveldioxide en ammoniak
- ABEKP3 = organische en anorganische gassen en dampen, zwaveldioxide, ammoniak en fijnstof (giftig)
- AP3 = organische gassen en dampen in combinatie met fijnstof (giftig)
- B = anorganische gassen en dampen
- AX = organische gassen en dampen met een kookpunt < 65°C

Overige uitvoeringen op aanvraag.

## SÉCURE ET COMFORTABLE

Pour la protection des voies respiratoires Edge vous propose des masques et filtres classe 1 et 2. Les respirateurs à demi-masque confortable sont fabriqués avec du caoutchouc et de silicone de haute qualité.
Les filtres classe 1 et 2 sont disponibles dans les versions suivantes :

- A = gaz et vapeurs organiques avec point d'ébullition > 65°C
- AP3 = gaz et vapeurs organiques en combinaison de particules (toxique)
- ABEK = gaz et vapeurs organiques et inorganiques, le dioxyde de soufre et ammoniaque
- ABEK3 = gaz et vapeurs organiques et inorganiques, le dioxyde de soufre, ammoniaque et particules (toxique)
- AP3 = gaz et vapeurs organiques en combinaison de particules (toxique)
- B = gaz inorganiques et vapeurs
- AX = gaz organiques et vapeurs avec point d'ébullition < 65°C

Autres modéles sur demande.

## SAFE AND COMFORTABLE

We offer breathing masks and filters in class 1 and 2. The comfortable masks are made of high-quality rubber and silicone.
The filters in class 1 and 2 are available in the following versions:

- A = organic gases and vapours with a boiling point > 65°C
- AP3 = organic gases and vapours in combination with particulate matter (toxic)
- ABEK = organic and inorganic gases and vapours, sulphur dioxide and ammonia
- ABEKP3 = organic and inorganic gases and vapours, sulphur dioxide, ammonia and particulate matter (toxic)
- AP3 = organic gases and vapours in combination with particulate matter (toxic)
- B = inorganic gases and vapours
- AX = organic gases and vapours with a boiling point < 65°C

Other filters on request.



# ADEMHALINGSBESCHERMING KLASSE 1 EN 2

## HALFGELAATSMASKER RUBBER KLASSE 1



Art. no. EMIN2000C

## HALFGELAATSMASKER SILICONE KLASSE 1



Art. no. EMIN2000S

## VOLGELAATSMASKER KLASSE 2



Art. no. EVMGIN3150C

## FILTERS KLASSE 1




| | |
|---|---|
| A1 klasse 1 | Art. no. EFA1 |
| A1P3 klasse 1 | Art. no. EFA1P3 |
| A1B1E1K1P3 klasse 1 | Art. no. EFA1B1E1K1P3 |
| P3 klasse 1 A | Art. no. EFP3 |

## FILTERS KLASSE 1




| | |
|---|---|
| A1 klasse 1 | Art. no. EFA1 |
| A1P3 klasse 1 | Art. no. EFA1P3 |
| A1B1E1K1P3 klasse 1 | Art. no. EFA1B1E1K1P3 |
| P3 klasse 1 A | Art. no. EFP3 |

## FILTERS KLASSE 2 (DIN SCHROEFDRAAD)



| | |
|---|---|
| P3 klasse 2 | Art. no. EFPL20P3 |
| A2 klasse 2 | Art. no. EFCA20A2 |
| B2 klasse 2 | Art. no. EFCA20B2 |
| A2B2P3 klasse 2 | Art. no. EFCA20A2B2P3 |
| A2B2E2K2 klasse 2 | Art. no. EFCA20ABEK2 |
| AX klasse 2 | Art. no. EFCA20AX |
| A2B2E2K2P3 klasse 2 | Art. no. EF30ABEK2P3 |

# OOG-/GELAATSBESCHERMING

## PROTECTION OCULAIRE/FACIALE

## EYE/FACE PROTECTION











# VEILIGHEIDSBRILLEN

## OOG-/GELAATSBESCHERMING

Edge Safety Equipment ontwikkelt moderne, comfortabele en hoogwaardige veiligheidsbrillen en gelaatsschermen. Ons assortiment biedt aansluiting op de veranderende vraag vanuit de markt, zonder het oogpunt van veiligheid uit het oog te verliezen.

## PROTECTION OCULAIRE/FACIALE

Edge Safety Equipment développe des lunettes de sécurité de haute qualité, modernes et confortables, ainsi que des protections de visage.Notre assortiment répond aux exigences du marché tout en préservant votre sécurité.

## EYE/FACE PROTECTION

Edge Safety Equipment develops modern, comfortable and high-quality safety glasses and visors. Our range offers an answer to the ever changing demand, without losing sight of safety.



Symboolverklaring/ Explication des symboles/ Symbol explanation

| | | | |
|---|---|---|---|
| | Anti-kras Plus | Anti-rayures Plus | Anti-Scratch Plus |
| | Anti-condens Plus | Anti-condensation Plus | Anti-Fog Plus |
| UV400 | UV bescherming | Absorption d'UV | UV protection |
| IR5 | IR = 5 | IR = 5 | IR = 5 |
| KN | Anti-kras ++<br>Anti-condens ++ | Anti-rayures ++<br>Anti-condensation ++ | Anti-Scratch ++<br>Anti-Fog ++ |

# VEILIGHEIDSBRILLEN

## WARRIOR



Art.no. EPCE100BC

KN



Art.no. EPCE100BA

KN



Art.no. EPCE100BS

KN



Art.no. EPCE100BIO

## SHOOTING STAR



Art.no. EPCE150BC



Art.no. EPCE150BA



Art.no. EPCE150BS



Art.no. EPCE150BIO

## OWL



Art.no. EPCE200BC

KN



Art. no. EPCE200BA

KN



Art. no. EPCE200BS

KN



Art. no. EPCE200BIO

## THUNDER



Art.no. EPCE250BC

KN



Art. no. EPCE250BA

KN



Art. no. EPCE250BS

KN



Art. no. EPCE250BIO

## HAWK



Art.no. EPCE825C

KN



Art. EPCE3825S

KN

## SPIDER



Art.no. EPCE875C



Art. no. EPCE875S

# VEILIGHEIDSBRILLEN

## BASIC DYNA



Art.no. EPCE475C



Art.no. EPCE475A



Art.no. EPCE475S



Art.no. EPCE475IO

## FUSION



Art.no. EPCE650C

KN



Art. no. EPCE650S

KN

## VISITOR



Art.no. EPCE700C

## FALCON



Art.no. EPCE50C

## TECHNO



Art.no. EPCE850C



Art. no. EPCE850S



Art. no. EPCE850IO

## ULTRA SPECTAGOGGLE



Art.no. EPCE910C



Art. EPCE910S

## CHEM SPLASH



Art.no. EPCE20

# VEILIGHEIDSBRILLEN / GELAATSSCHERMEN

## VOLCANO PLUS





Art.no. EPCE675SG

Art.no. EPCE675CG

## RACER





Art. no. EPCE350S

Art.no. EPCE350C

## 605



**Art. no. 605010000**

## 606

**Art. no. 606050000**



Universele aluminium helmbeugel.

## OSPREY





Art. no. EPCE845S

Art.no. EPCE845C

## HYDRA PEGASUS



Art.no. EPCE251C

## 607



**Art. no. 607010022**

Polycarbonaat vlak vizier tbv 605 en 606



**Art. no. 607A70000**

Polycarbonaat gebogen vizier tbv 605 en 606



**Art. no. 607A00050**

Polycarbonaat gebogen X5 vizier tbv 605 en 606

# GEHOORBESCHERMING

## PROTECTION AUDITIVE

## HEARING PROTECTION











# GEHOORBESCHERMING

## GEHOORBESCHERMING

De Edge gehoorbescherming, biedt comfort en bescherming voor het gehoor tijdens het werken in een lawaaierige omgeving. Het assortiment bevat oordoppen/-pluggen, detecteerbare oordoppen en gehoorkappen. De dempingswaarde van de gehoorbeschermingsartikelen wordt uitgedrukt in SNR-waarde, welke in de product data sheets worden weergegeven.

Oordop/-plug:  art. no.
Oordop/-plug met koord: art.no + C
Detecteerbare oordop/-plug: art. no + CD
Eenheid navulverpakking tbv dispenser: art. no. / aantal

## PROTECTION AUDITIVE

Le protection auditive de Edge, vous offre confort et protection de auditive l'ouïe quand vous travaillez dans un environnement bruyant. La gamme comprend bouchons d'oreilles, des bouchons d'oreilles détectables et casques antibruit. La valeur d'amortissement, des articles de protection auditive, est exprimée comme SNR-valeur, qui sont affichés dans les fiches de données du produit.

Bouchon d'oreille: art. no.
Bouchon d'oreille avec cordon: art.no + C
Bouchon d'oreille détectables: art no + CD
Recharge unité distributrice: art. no. / numéro

## HEARING PROTECTION

Edge hearing protection, offers comfort and protection for the hearing while working in a noisy environment. The range includes earplugs, detectable earplugs and ear muffs. The attenuation value of the hearing protection articles is expressed in SNR-value, which can be found in the product data sheets.

Earplug: art. no.
Earplug with cord: art.no + C
Detectable earplug: art. no + CD
Refill dispenser unit: art. no. / number





# GEHOORBESCHERMING

## DYNA-FIT 101



SNR 34dB

Art. no. NP101
Art. no. NP101C
Art. no. NP101CD
Art. no. NP101/300

## COMFORT-FIT 104



SNR 27dB

Art. no. NP104
Art. no. NP104C

## DISPENSER



incl. 250 plugs NP101

Art. no. NP250

## PIPER



SNR 29dB

Art. no. NP110

## DYNA-FIT LITE 102



SNR 34dB

Art. no. NP102
Art. no. NP102C
Art. no. NP102/250

## COMFORT-FIT DETECT 104



SNR 27dB

Art. no. NP104CD

## SPITFIRE



SNR 31dB

Art. no. NP111

## B52



SNR 34dB

Art. no. NP117

## QUIET-FIT 103



SNR 23dB

Art. no. NP103
Art. no. NP103C

## LITE BAND 105



SNR 24dB

Art. no. NP105

## HERCULES



SNR 30dB

Art. no. NP114



# VEILIGHEIDSHANDSCHOENEN

## GANTS DE PROTECTION

## HAND PROTECTION



# VEILIGHEIDSHANDSCHOENEN

## VEILIGHEIDSHANDSCHOENEN
Edge biedt een assortiment comfortabele veileigheidshandschoienen met vloeistof/ chemisch dichte, snijbestendige en grip eigenschappen. Deze handschoenen voldoen allen aan de EN388 normering, welke tevens de classificering van de handschoen bepaalt.

## GANTS DE PROTECTION
Edge offre une gamme de gants de protection confortables, résistant au liquide, produits chimiques, d'adhérence et aux coupures. Ces gants sont tous conformes au norme EN388, qui détermine la classification des gants.

## HAND PROTECTION
Dynamic offers a range of comfortable hand protection with liquid, chemical, cut-resistant and grip properties. These gloves all comply with the EN388 standard, which also defines the classification of gloves.







| | | | Rating |
|---|---|---|---|
| Schuur | Abrasion | Abrasion | 1-4 |
| Snij (Coup Test ) | Coup (Coup Test ) | Cut (Coup Test ) | 1-5 |
| Scheur | Déchirure | Tear | 1-4 |
| Perforatie | Puncture | Puncture | 1-4 |
| Snij (TDM-100 Test) | Coup (TDM-100 Test) | Cut (TDM-100 Test) | A-F |
| Impact Bescherming | Impact Protection | Impact Protection | P,F,X* |

*P = pass F = False X = not tested

# SNIJBESTENDIGE VEILIGHEIDSHANDSCHOENEN

## D-AIR CUT 3 - NITRILE

4/3/4/1



| | |
|---|---|
| Art. no. GL310/8 | size 8 |
| Art. no. GL310/9 | size 9 |
| Art. no. GL310/10 | size 10 |

## D-FORCE CUT 3 - POLYURETHANE

4/3/4/3



| | |
|---|---|
| Art. no. GL320/8 | size 8 |
| Art. no. GL320/9 | size 9 |
| Art. no. GL320/10 | size 10 |

## D-FOAM CUT 5 - NITRILE

4/5/4/4



| | |
|---|---|
| Art. no. GL300/8 | size 8 |
| Art. no. GL300/9 | size 9 |
| Art. no. GL300/10 | size 10 |
| Art. no. GL300/11 | size 11 |

## D-FORCE CUT 5 - POLYURETHANE

4/5/4/2



| | |
|---|---|
| Art. no. GL330/8 | size 8 |
| Art. no. GL330/9 | size 9 |
| Art. no. GL330/10 | size 10 |
| Art. no. GL330/11 | size 11 |

# VEILIGHEIDSHANDSCHOENEN

## D- TECH PLUS - NITRILE

3/1/2/1/X



Art. no. GL110/8 size 8
Art. no. GL110/9 size 9
Art. no. GL110/10 size 10

## D GRIP COOL - LATEX

2/2/4/1/X



Art. no. GL220/8 size 8
Art. no. GL220/9 size 9
Art. no. GL220/10 size 10
Art. no. GL220/11 size 11

## D-CHEM SHIELD - PVC

4/1/2/1/X



Art. no. GL500/9 size 9
Art. no. GL500/10 size 10
Art. no. GL500/11 size 11

## D-WINTER COMFORT - NITRILE

3/2/3/2/X



Art. no. GL400/9 size 9
Art. no. GL400/10 size 10
Art. no. GL400/11 size 11

# VEILIGHEIDSHANDSCHOENEN

## D-GRIP - LATEX

3/1/4/2/X




| | |
|---|---|
| Art. no. GL200/8 | size 8 |
| Art. no. GL200/9 | size 9 |
| Art. no. GL200/10 | size 10 |
| Art. no. GL200/11 | size 11 |

## D-TECH BASIC - POLYURETHANE

4/1/3/1/X




| | |
|---|---|
| Art. no. GL120/7 | size 7 |
| Art. no. GL120/8 | size 8 |
| Art. no. GL120/9 | size 9 |
| Art. no. GL120/10 | size 10 |
| Art. no. GL120/11 | size 11 |

## D-TECH LITE - NITRILE

3/1/1/1/X




| | |
|---|---|
| Art. no. GL100PC/8 | size 8 |
| Art. no. GL100PC/9* | size 9 |
| Art. no. GL100PC/10* | size 10 |

## D-GRIP SUPER - NITRILE FOAM

4/1/4/1/X




| | |
|---|---|
| Art. no. GL210/7 | size 7 |
| Art. no. GL210/8 | size 8 |
| Art. no. GL210/9 | size 9 |
| Art. no. GL210/10 | size 10 |
| Art. no. GL210/11 | size 11 |

## D-TECH - NITRILE

4/1/2/1/X




| | |
|---|---|
| Art. no. GL130/8 | size 8 |
| Art. no. GL130/9 | size 9 |
| Art. no. GL130/10 | size 10 |
| Art. no. GL130/11 | size 11 |

## D-TECH LITE - NITRILE

3/1/1/1/X




| | |
|---|---|
| Art. no. GL100FC/8 | size 8 |
| Art. no. GL100FC/9* | size 9 |
| Art. no. GL100FC/10* | size 10 |

# CORPORATE IDENTITY
















Voor een optimale herkenbaarheid, versterking van merkherkenning en een eenduidige uitstraling bieden wij de mogelijkheid om tal van PBM's uit onze premium reeksen te personaliseren. Dit kan bijvoorbeeld door de toevoeging van uw logo op de producten of de kleurkeuze van het materiaal.

Deze aanpassingen vallen uiteraard binnen de geldende certificeringen en doen geen consessie aan veiligheid of gebruikscomfort.

Ook de ontwikkeling van een product of samenstelling van een pakket, passend bij uw wens of toepassingsbehoefte, behoort tot de mogelijkheden.

Benader hiervoor uw contactpersoon.

Pour une reconnaissance optimale, un renforcement de la reconnaissance de la marque et une apparence sans ambiguïté, nous offrons la possibilité de personnaliser de nombreux EPI de nos gammes premium. Cela peut être fait, par exemple, en ajoutant votre logo aux produits ou en choisissant la couleur du matériau.

Ces modifications sont conformes aux certifications pertinentes et ne compromettent pas la sécurité ou le confort de l'utilisateur.

Le développement d'un produit ou la composition d'un ensemble, ce qui correspond à vos souhaits ou besoins d'application, est également possible.

S'il vous plaît contacter votre interlocuteur pour cela.

For optimal recognisability, reinforcement of brand recognition and an unambiguous appearance, we offer the possibility to personalize numerous PPE from our premium ranges. For example, by adding your logo on the products or the color choice of material.

These modifications meet the relevant certifications and make no concession to safety or convenience.

The development of a product or composition of a package, which suits your wishes or application needs, is also possible.

Please contact your contact person for further information.

# KEURING

## KEURING
Voor het garanderen van de gebruiksveiligheid dienen vele PBM‘s jaarlijks gecontroleerd te worden op de juiste werking en eventuele slijtage. Naar wens kan deze keuring op uw of onze locatie worden uitgevoerd.

## INSPECTION
Pour garantir la sécurité de l‘utilisateur, de nombreux EPI doivent être contrôlés chaque année pour vérifier leur bon fonctionnement et leur possible usure. Si vous le souhaitez, cette inspection peut être effectuée chez vous ou chez nous.

## INSPECTION
To guarantee the safety of use serve many PBMs annually be checked for proper operation and possible wear. On request these inspections can be conducted at your or our location.



# TRAINING

## TRAINING
De veiligheid van PBM‘s is onlosmakelijk verbonden met de kennis van het juiste gebruik van het product. Daarom bieden wij diverse maatwerk trainingen aan. Of het nu om de gebruiker of de verkoop-adviseur gaat. Naar wens kan een training op uw of onze locatie worden georganiseerd.

## TRAINING
La sécurité des EPI est inextricablement liée à la connaissance de l‘utilisation correcte du produit. Voilà pourquoi nous offrons différents cours de formation sur mesure. Que ce concerne l‘utilisateur ou le conseiller de vente. Si vous le souhaitez, une formation peut être organisée à votre ou notre emplacement.

## TRAINING
The safety of PPE is inextricably linked to the knowledge of the proper use of the product. Therefore, we offer various customized training courses. Whether it concerns the user or the sales advisor. If desired training can be organized at your or our location.



YOUR SAFETY MATTERS

# EDGE

## SAFETY EQUIPMENT



www.decorlux.be
DECORLUX
info@decorlux.be
+32 (0)3 777 69 88
+32 (0)3 778 13 17
Antwerpsesteenweg 96
B-9140 TIELRODE